Operator Manual

ADC2352
Air Drill Cart

Great Plains
Manufacturing, Inc.
www.greatplainsmfg.com

Read the operator manual entirely. When you see this symbol, the subsequent instructions and warnings are serious - follow without exception. Your life and the lives of others depend on it!

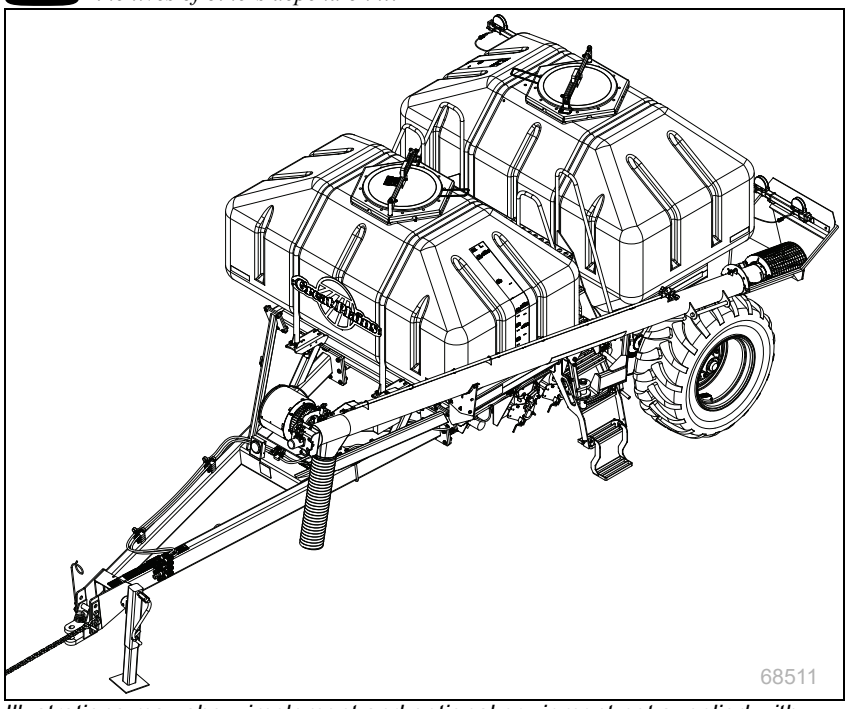

Illustrations may show implement and optional equipment not supplied with standard unit or may depict similar carts where a topic is identical.

ORIGINAL INSTRUCTIONS

EN

 Printed 2023-11-29 167-140M

Machine Identification

Record your machine details in the log below. If you replace this manual, be sure to transfer this information to the new manual.

If you or the dealer have added options not originally ordered with the machine, or removed options that were originally ordered, the weights and measurements are no longer accurate for your machine. Update the record by adding the machine weight and measurements with the option(s) weight and measurements.

Model Number	
Serial Number	
Machine Height	
Machine Length	
Machine Width	
Machine Weight	
Year of Construction	
Delivery Date	
First Operation	
Accessories	_____ _____ _____

Dealer Contact Information

Name: _____

Street: _____

City/State: _____

Telephone: _____

Email: _____

Dealer's Customer No.: _____

WARNING: Cancer and Reproductive Harm - www.P65Warnings.ca.gov

Table of Contents

Printed in the United States of America

Safety Information

■Look for Safety Symbol

The SAFETY ALERT SYMBOL[a] indicates there is a potential hazard to personal safety involved and extra safety precaution must be taken. When you see this symbol, be alert and carefully read the message that follows it. In addition to design and configuration of equipment, hazard control and accident prevention are dependent upon the awareness, concern, prudence and proper training of personnel involved in the operation, transport, maintenance and storage of equipment.

■Be Aware of Signal Words

Signal words designate a degree or level of hazard seriousness. The signal words are:

DANGER

DANGER Indicates an imminent hazard which, if not avoided, will result in death or serious injury. This signal word is limited to the most extreme situations, typically for machine components that, for functional purposes, cannot be guarded.

WARNING

WARNING Indicates a potential hazard which, if not avoided, could result in death or serious injury, and includes hazards that are exposed when guards are removed. It may also be used to alert against unsafe practices.

CAUTION

CAUTION Indicates a potential hazard which, if not avoided, may result in minor or moderate injury. It may also be used to alert against unsafe practices.

■Be Familiar with Safety Decals

1. Throughly read and understand **“Safety Reflectors and Decals”** on page 4.
2. Read all instructions noted on the decals.
3. Keep decals clean. Replace damaged, faded and illegible decals.

■Wear Protective Equipment

1. Wear protective clothing and equipment appropriate for the job, such as safety shoes, safety glasses, hard hat, and ear plugs.
2. Do not wear contaminated clothing. Wash protective clothing and equipment with soap and water after each use. Personal clothing must be laundered separately from household articles.
3. Clothing contaminated with certain pesticides must be destroyed according to state and local regulations. Read chemical label for specific instructions.
4. Clothing must fit snug without fringes and pull strings to avoid entanglement with moving parts.
5. Prolonged exposure to loud noise can cause hearing impairment or hearing loss. Wear suitable hearing protection such as earmuffs or earplugs.
6. Operating equipment safely requires your full attention. Avoid wearing entertainment headphones while operating machinery.

a. Symbols and color of decals are based on ANSI standard Z535.

■Handle Chemicals Properly

Agricultural chemicals can be dangerous. Improper use can seriously injure persons, animals, plants, soil and property.

1. Do not use liquid treatments with air cart.
2. Read and follow chemical manufacturer's instructions.
3. Wear protective clothing.
4. Handle all chemicals with care.
5. Avoid inhaling smoke from any type of chemical fire.
6. Never drain, rinse or wash dispensers within 100 feet of a freshwater source, nor at a car wash.
7. Store or dispose of unused chemicals as specified by chemical manufacturer.
8. Dispose of empty chemical containers properly. Laws generally require power rinsing or rinsing three times, followed by perforation of the container to prevent re-use.
9. Perform meter maintenance by removing meters from bottom of empty hopper.
10. If obstruction removal or repair requires hopper entry, have the work performed by a team trained in confined space procedures.

■Confined Space

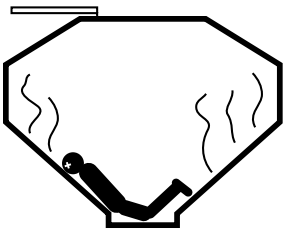

Once used for hazardous fertilizers, or seeds with hazardous treatments, your hoppers may become "*permit-required confined spaces*" under applicable statutes, regulations, insurance rules or business policy. The ladder provided in the hoppers is for escape, not routine entry.

1. A hopper that is full or merely appears full can be an entrapment hazard. You can sink entirely into the grain, or into a void, and suffocate in a matter of seconds. Grain bridges and crusts are especially dangerous.
2. When hazardous fumes are present, you can be quickly overcome even with the hopper lid open.
3. Do not enter a hopper for material loading, material unloading, hopper cleaning or meter maintenance.
4. Clean hopper by power washing from outside hopper top.

■ Use A Safety Chain

1. A safety chain will help control drawn machinery if the machinery separates from tractor drawbar.
2. Use a chain with a strength rating equal to or greater than the gross weight of towed machinery.
3. Attach chain to tractor drawbar support or other specified anchor location. Allow only enough slack in chain to permit turning.
4. Replace chain if any links or end fittings are broken, stretched or damaged.
5. Do not use safety chain for towing.

■Avoid High Pressure Fluids

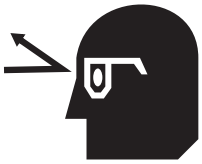

Escaping fluid under pressure can penetrate the skin, causing serious injury.

1. Make sure all hydraulic fluid connections are tight and all hydraulic hoses and lines are in good condition before applying pressure to the system.
2. Avoid the hazard by relieving pressure before disconnecting hydraulic lines or performing any work on the system.
3. Wear protective gloves and safety glasses or goggles when working with hydraulic systems.
4. Escaping fluid under pressure can penetrate the skin causing serious injury.
5. Use a piece of paper or cardboard, **NOT BODY PARTS**, to check for suspected leaks.
6. **DO NOT DELAY.** If an accident occurs, seek immediate medical assistance from a physician familiar with this type of injury. Any fluid injected into the skin or eyes must be treated within a few hours or gangrene can result.

■Tire Safety

Tire changing can be dangerous and must be performed by trained personnel using correct tools and equipment.

1. When inflating tires, use a clip-on chuck and extension hose long enough for you to stand to one side–not in front of or over tire assembly. Use a safety cage if available.
2. When removing and installing wheels, use wheel-handling equipment adequate for weight involved.

■Use Safety Lights and Devices

Slow-moving tractors and towed machinery can create a hazard when driven on public roads. They are difficult to see, especially at night.

1. Use flashing warning lights and turn signals whenever driving on public roads.
2. Use safety devices provided with implement.

■Keep Riders Off Machinery

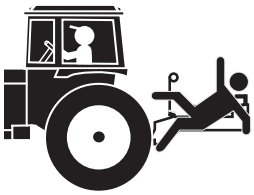

1. Never carry rides or use machinery as a personal lift.
2. Riders obstruct the operators view.
3. Riders can be struck by foreign objects or thrown from the machine
4. Never allow children to operate equipment.
5. Keep all bystanders away from machine during operation.

■Transport Machinery Safely

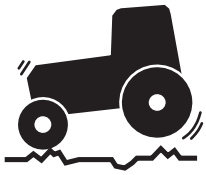

Maximum Transport speed for implement is 20 mph (30 kph). Some rough terrains require a slower speed. Sudden braking can cause a towed load to swerve and upset.

1. Comply with state and local laws.
2. Carry reflectors or flags to mark machinery in case of breakdown on the road.
3. Latch auger.
4. Do not tow a load that, when fully loaded, weighs more than 1.5 times the weight of the tractor.
5. Follow your tractor manual recommendations for maximum hitch loads. Insufficient weight on tractor steering wheels will result in loss of control.
6. Carry reflectors or flags to mark air cart and drill in case of breakdown on the road.
7. Keep clear of overhead power lines and other obstructions when transporting.

■Shutdown and Storage

1. Park the tractor and implement on a solid, level surface where children normally do not play.
2. Put tractor in park or set park brake. Turn off engine and remove switch key to prevent unauthorized starting.
3. Wait for all components to come to a complete stop before leaving the operator’s seat.
4. Detach the tractor. Secure the air cart using blocks and the stand provided.
5. Clean out and safely store or dispose of residual chemicals.

■Practice Safe Maintenance

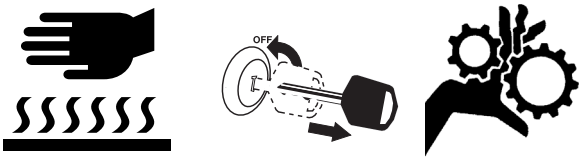

1. Understand procedure before doing work. Use proper tools and equipment. Refer to this manual.
2. Work in a clean, dry area.
3. Put tractor in Park, turn off engine. To prevent unauthorized starting, remove key before performing maintenance or service work.
4. Make sure all moving parts have stopped and all system pressure is relieved.
5. Disconnect lighting harness from the tractor before servicing or adjusting electrical systems.
6. Welding: Disconnect lighting harness from the tractor. Protect hydraulic lines. Avoid fumes from heated paint.
7. Inspect all parts. Make sure parts are in good condition and installed properly.
8. Do not alter this machine in a way which will adversely affect its performance.
9. Remove buildup of grease, oil or debris.
10. Remove all tools and unused parts from implement before operation.

■Safety At All Times

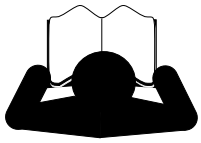

Thoroughly read and understand the instructions in this manual before operation. Read all instructions noted on the safety decals.

Do not allow anyone to operate this equipment who has not fully read and comprehended this manual and who has not been properly trained in the safe operation of the equipment.

1. The operator must not use drugs or alcohol as they can change the alertness or coordination of that person while operating equipment. If over-the-counter drugs are used, seek medical advice on whether you can safely operate equipment.
2. Operator must be familiar with all functions of the tractor and attachments, and be able to handle emergencies quickly.
3. Make sure all guards and shields are in place and secured before operating the implement.
4. Keep all bystanders away from equipment and work area.
5. Operator must start tractor and operate controls from the driver's seat only, never from the ground.
6. Dismounting from a moving tractor can cause serious injury or death.
7. Be familiar with all functions of the implement.
8. Do not leave implement unattended with tractor engine running.
9. Do not stand between the tractor and air cart during hitching.
10. Wear snug-fitting clothing to avoid entanglement with moving parts.

Safety Reflectors and Decals

Your air cart comes equipped with all lights, safety reflectors and decals in place. They were designed to help you safely operate your air cart.

▲ *Read and follow decal directions.*

▲ *Keep lights in operating condition.*

▲ *Keep all safety decals clean and legible.*

▲ *Replace all damaged or missing decals. Order new decals from your Great Plains dealer. Refer to this section for proper decal placement.*

▲ *When ordering new parts or components, also request corresponding safety decals.*

To install new decals:

1. Clean the area on which the decal is to be placed.
2. Peel backing from decal. Press firmly on surface, being careful not to cause air bubbles under decal.

Slow Moving Vehicle Reflector

818-055C

On the back of the light bar;
1 total

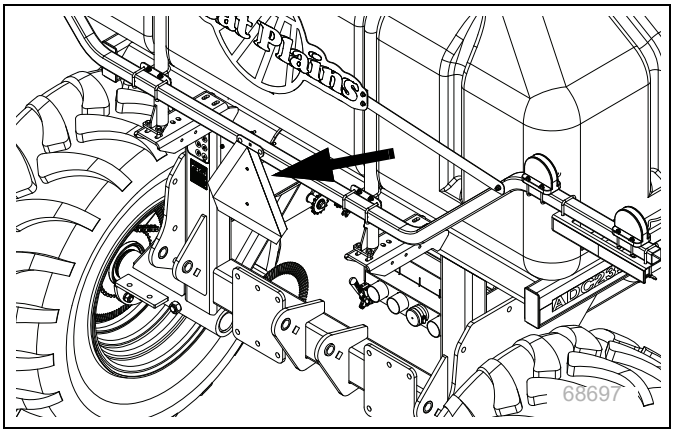

Red Reflectors

838-266C

On the outside ends of the light bar; 2 total

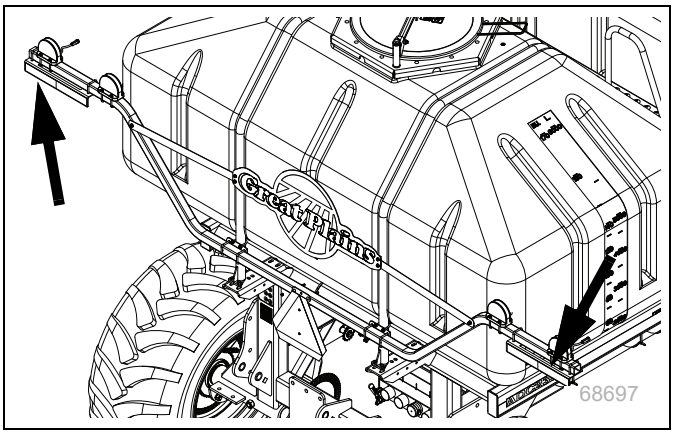

Amber Reflectors

838-265C

Front and outside corner of front hopper, outside rear corner of rear hopper; 6 total

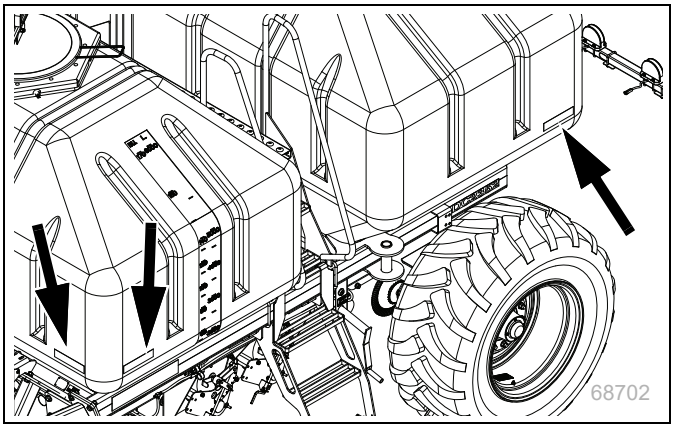

Daytime Reflectors

838-267C

On the ends of the light bar; 2 total

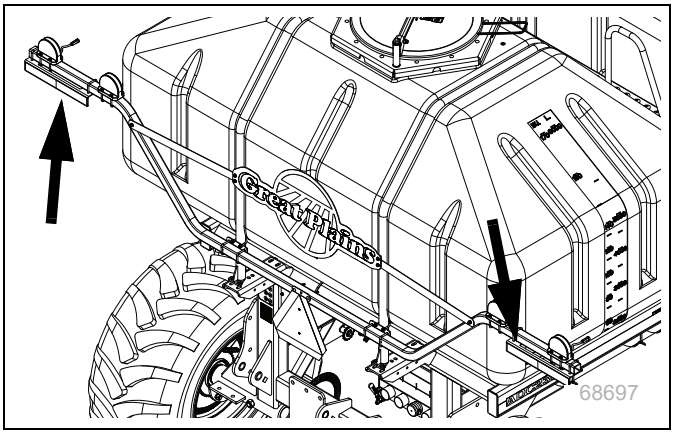

Danger: Read Manual

848-512C

On tongue at hitch; 1 total

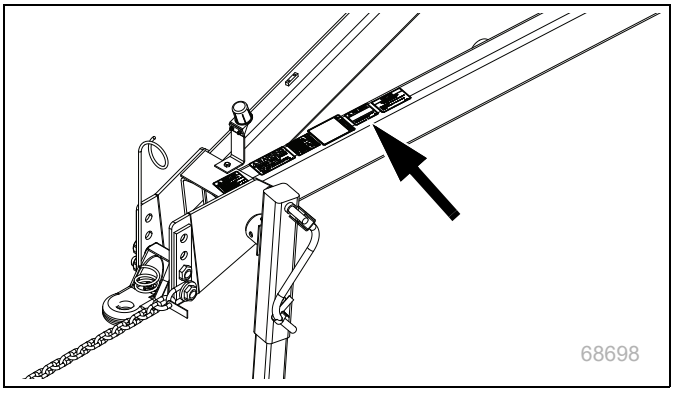

Danger: Electrocution Hazard

818-627C

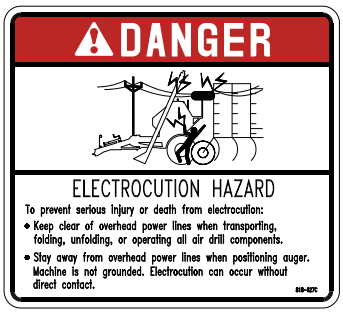

On the tongue,
On the auger tube;
1 total

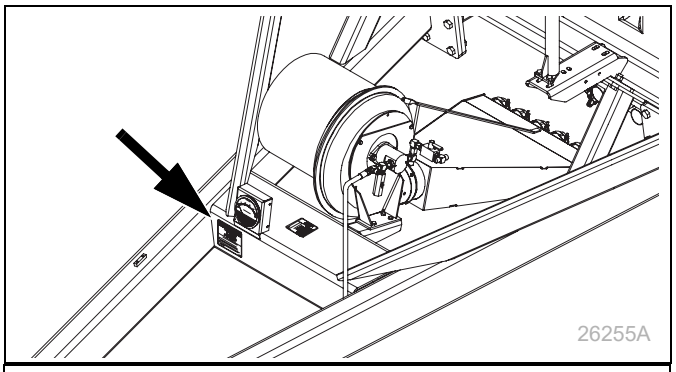

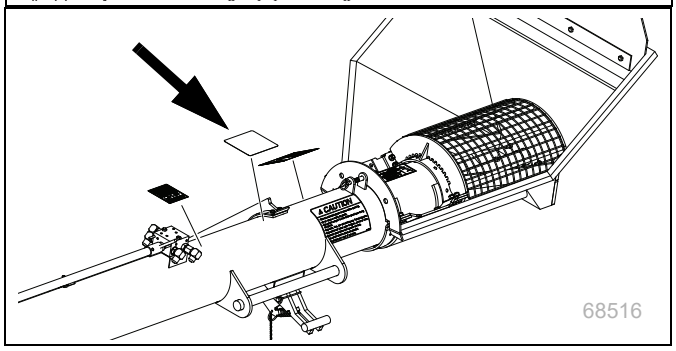

Danger: Missing Guard Hazard

818-633C

On the auger tube near inlet; 1 total

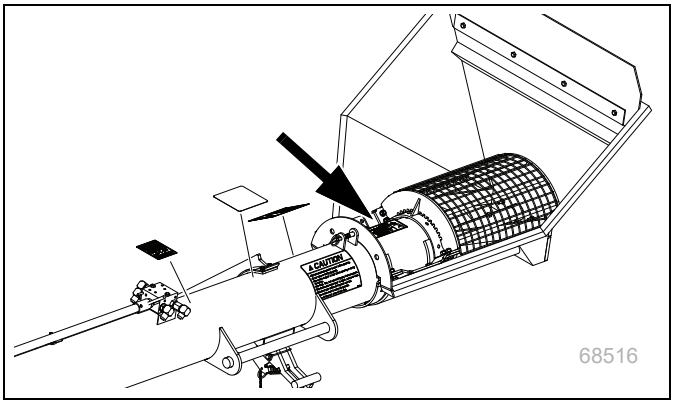

Danger: Rotating Auger

818-634C

On the auger tube near inlet; 1 total

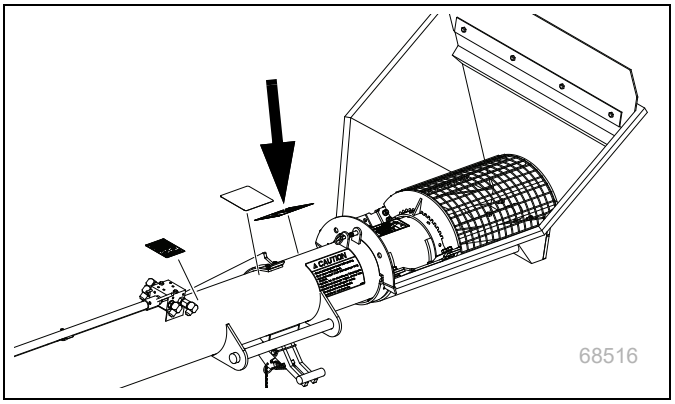

Warning: Excessive Speed Hazard

818-188C

On top of tongue at hitch; 1 total

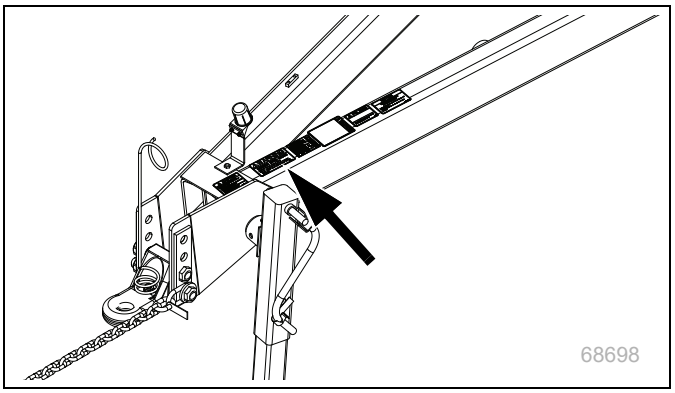

Warning: High Pressure Fluid Hazard

818-339C

At rear hydraulic connection panel, on the tongue near the hitch, on the auger near handle; 3 total

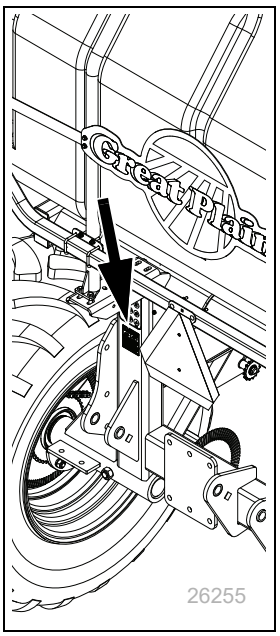

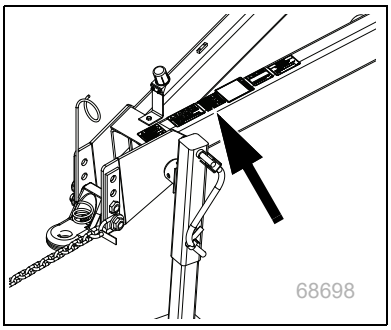

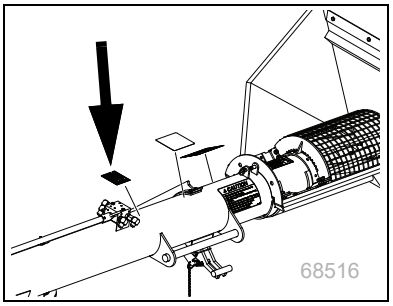

Warning: Confined Space

818-628C

On lid, walkboard side, each hopper; 2 total

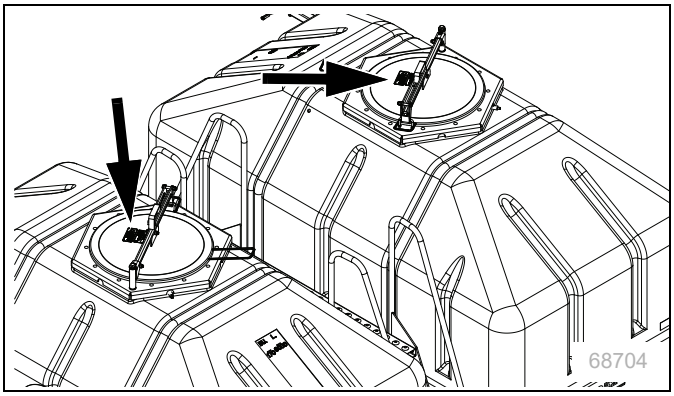

Warning: Fan Hazard

818-632C

On the cross brace at fan; 1 total

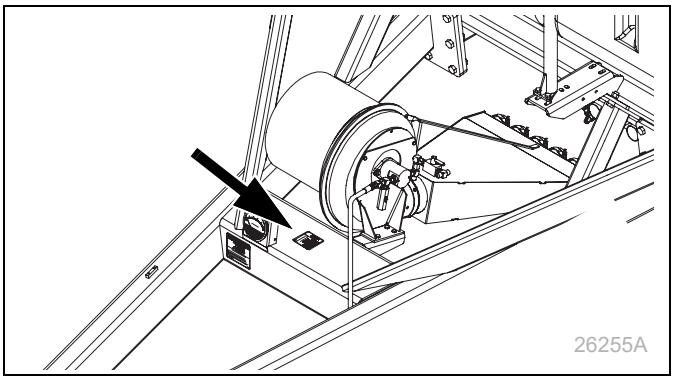

Caution: General Information

818-630C

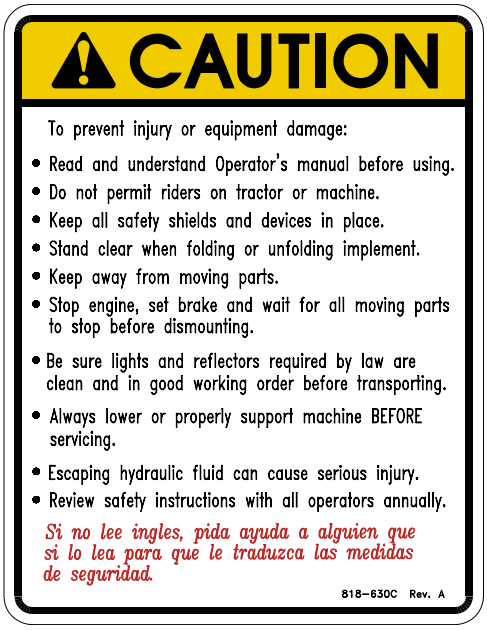

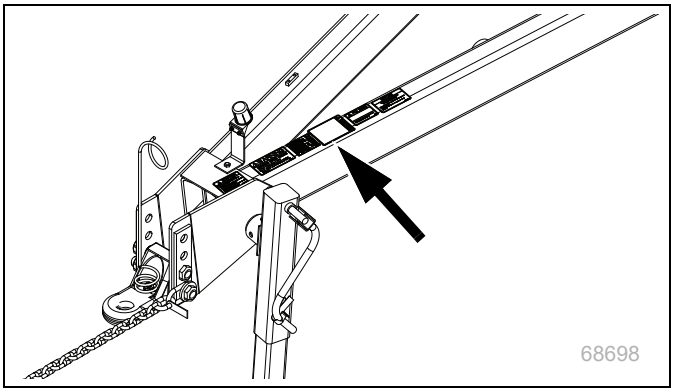

On the tongue near the hitch; 1 total

Caution: Auger General

818-635C

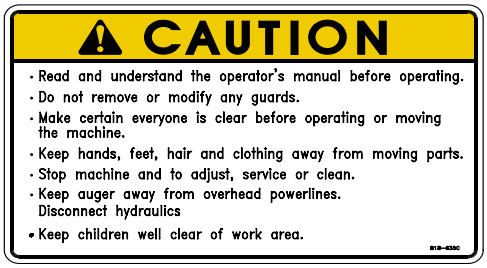

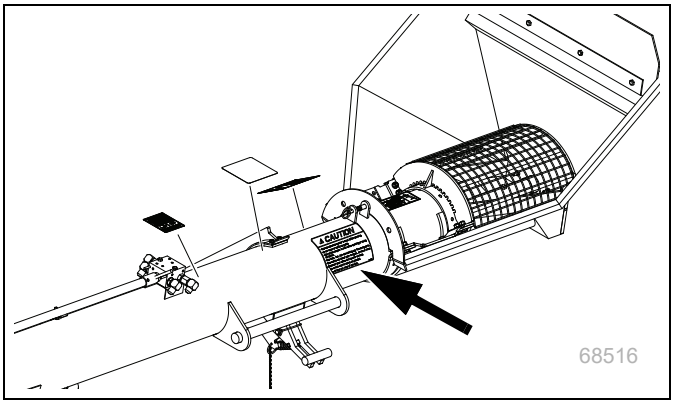

On discharge end of auger; 1 total

Caution: Tire Pressure

848-102C

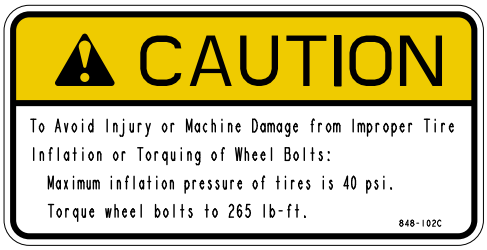

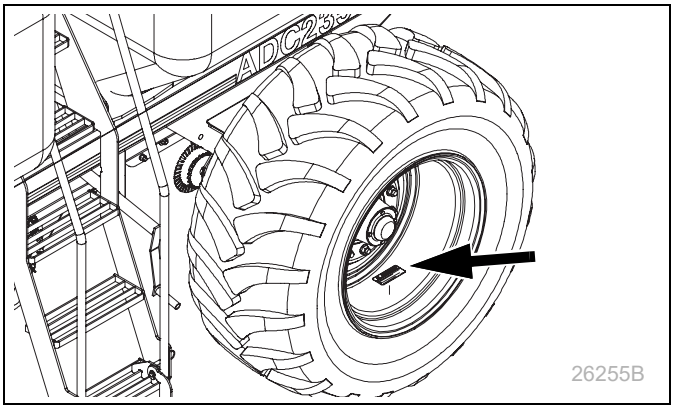

On each wheel rim (23.5/55-26 tires); 2 total

Caution: Tire Pressure

848-103C

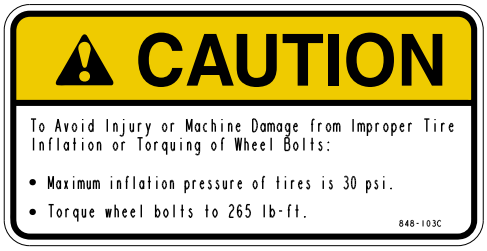

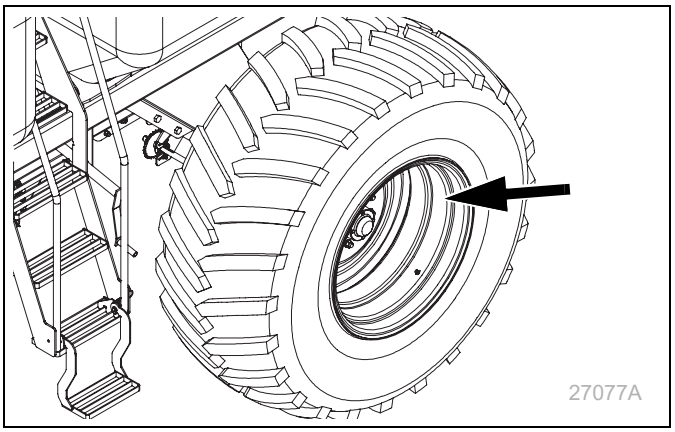

On each wheel rim (30.5LR32 tires); 2 total

Caution: Towing Hazard

848-105C

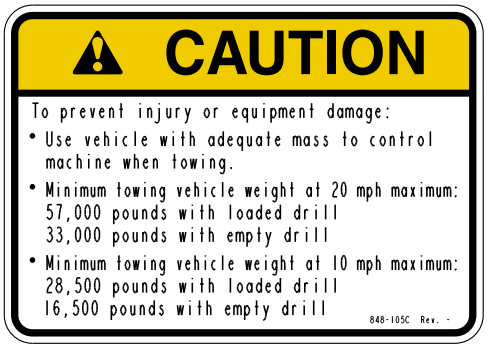

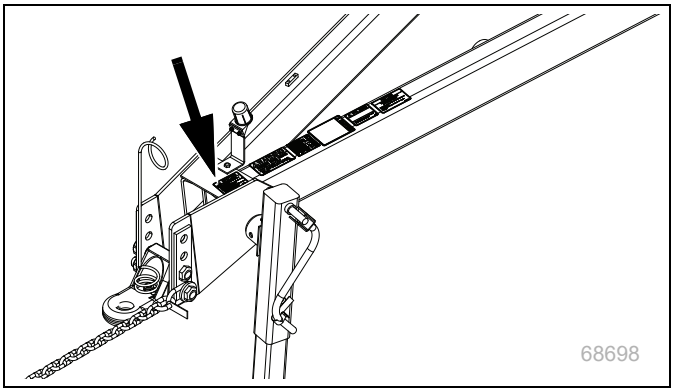

On the tongue near the hitch; 1 total

Caution: Pinch Point

848-578C

On each side of the swing arm mount; 2 total

Introduction

Great Plains ADC2352 is a pull-type implement for volumetric seeding. A hydraulically driven fan creates an airflow to supply seed and dry treatments.

Every ADC2352 air cart is designed and built with care using only quality materials. For the best experience, read this manual and follow all instructions carefully. These pages will guide you through the operation and contain tips for easier adjustment and maintenance.

All information in this manual is current as of publication. Information contained within is subject to change to ensure top performance.

The ADC2352 air cart is designed to be mounted in front of the following implements:

- CTA4000 40-foot Conventional Tillage Air Drill
- CTA4000HD 40-foot Heavy Duty Tillage Air Drill
- CTA4500 45-foot Conventional Tillage Air Drill
- CTA4500HD 45-foot Heavy Duty Tillage Air Drill
- FCA4500 45-foot Conventional Tillage Air Drill
- NTA3010 30-foot No-Till Air Drill
- NTA3510 35-foot No-Till Air Drill

Use the air cart and drill to seed production-agriculture crops only. Do not modify the air cart for use with attachments other than Great Plains options and accessories specified for use with the air cart.

Using This Manual

The following terms are used throughout this manual.

Right-hand and left-hand as used in this manual are determined by facing the direction the machine will travel while in use unless otherwise stated.

NOTICE

NOTICE Indicates a potential hazard which, if not avoided, may result in moderate to severe damage to your machine, machine parts, or nearby property.

NOTE:
This message indicates useful - but not crucial - information for machine operation, assembly, or adjustment. It may also direct you towards additional information.

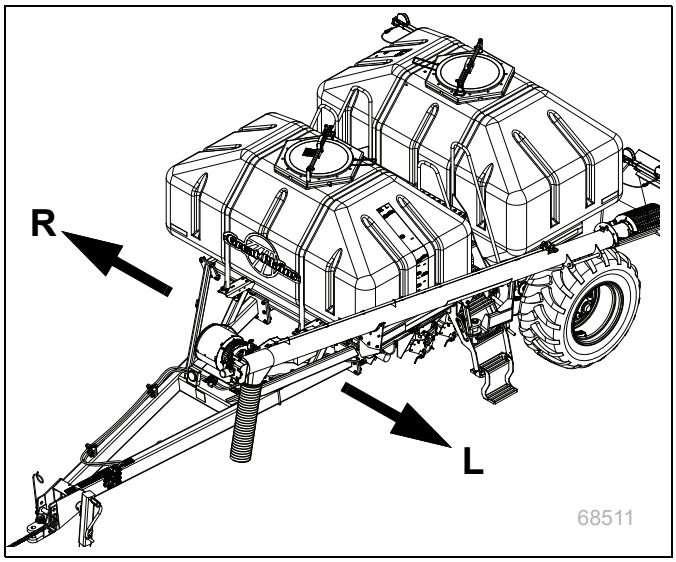

Parts Manual QRC

The QR Code to the left will take you to this machine's parts manual. Use your smart phone or tablet to scan and start viewing.

Product Manuals QRC

The QR Code to the left will take you to Great Plains' catalog of product manuals. Use your smart phone or tablet to scan and start viewing.

Document Family

167-140M Operator Manual (this document)

167-085B Seed and Fertilizer Rates Manual

167-140P Parts Manual

160-500M DrillCommand User Guide

Owner Assistance

If you need customer service or repair parts, contact a Great Plains dealer. They have trained personnel, repair parts, and equipment specially designed for Great Plains products.

Your machine's parts were specially designed and should only be replaced with Great Plains parts. Always use the serial and model number when ordering parts from your Great Plains dealer. The serial number plate is located on the front, left-hand side of the mainframe.

Record your model and serial number on the inside cover of this manual for quick reference.

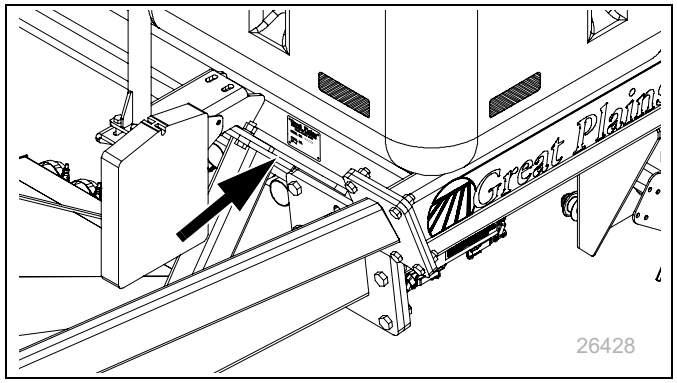

Further Assistance

Great Plains Manufacturing, Inc. and your Great Plains dealer want you to be satisfied with your new air cart. If for any reason you do not understand any part of this manual or are otherwise dissatisfied, please take the following actions first:

1. Discuss the matter with your dealership service manager. Make sure they are aware of any problems so they can assist you.
2. If you are still unsatisfied, seek out the owner or general manager of the dealership.

If your dealer is unable to resolve the problem or the issue is parts related, please contact:

Great Plains Service Department
1525 E. North St.
P.O. Box 5060
Salina, KS 67402-5060

Or go to www.greatplainsag.com and follow the contact information at the bottom of your screen for our service department.

Preparation and Setup

This section helps you prepare your tractor, air cart, and implement for use. Before using the air cart in the field, you must hitch the air cart and implement to a suitable tractor for setup.

Pre-Setup Checklist

- ❑ Read and understand **"Safety Information"** on page 1.
- ❑ Check that all working parts are moving freely, bolts are tight, and cotter pins are spread.
- ❑ Check that all grease fittings are in place and lubricated. See "**Lubrication**" on page 48.
- ❑ Check that all safety decals and reflectors are correctly located and legible. Replace if damaged. See "**Safety Reflectors and Decals**" on page 4.
- ❑ Inflate tires to pressure recommended and tighten wheel bolts as specified. See "**Torque Values Chart**" on page 63.

This manual only covers air cart setup. Consult the operator's manual for the implement for additional setup steps required before operation.

Ground Drive System

Sprockets on the cart need to be checked to make sure the seeding rates for your implement match those in the Seed Rate Manual.

The sprockets are factory-installed for a specific implement, and may be incorrect if the cart is delivered with a different implement. Once configured for a particular implement, cart meter rate is determined by the variable rate gearboxes and final drive range gears.

Cart Sprocket Setup

Implement	Inner Main Driveshaft	Clutch Output	Manifold Outlets
CTA4000/HD	30T	24T	5 Towers
CTA4500/HD	30T	22T	5 Towers
FCA4500	39T	22T	6 Towers
NTA3010	30T	23T	4 Towers
NTA3510	26T	24T	5 Towers

If any sprockets do not match the table, contact your dealer for the correct replacement sprockets.

Conversion requires one drive shaft output sprocket and two clutch output sprockets.

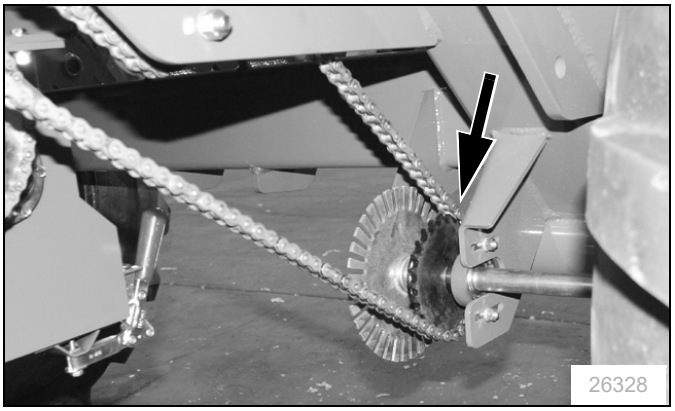

Figure 1Inner Main Driveshaft Sprocket

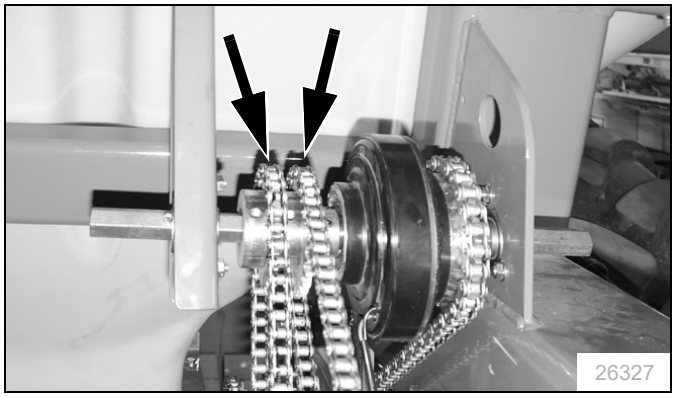

Figure 1Clutch Output Sprockets

Hydraulic Drive System

Refer to your DrillCommand guide for setup information.

Hitching

DANGER

Crushing ***Hazard:***

You may be severely injured or killed by being crushed between the tractor, air cart, and drill. Do not stand or place any part of your body between machines being hitched. Stop tractor engine and set park brake before installing hitch pins.

When ready for planting, the air cart is part of an assembly that includes the tractor, the air cart, and the drill.

This manual includes full details only for the leading air cart's forward hitch. Consult the drill manual for trailing drill hitching.

The air cart must be hitched to the tractor first. Once the air cart and drill are hitched together, they are usually left connected, unless parking or storage require separation.

To ensure consistent planting at the drill, the main frame of the air cart needs to be level. Set the tongue height before hitching for the first time.

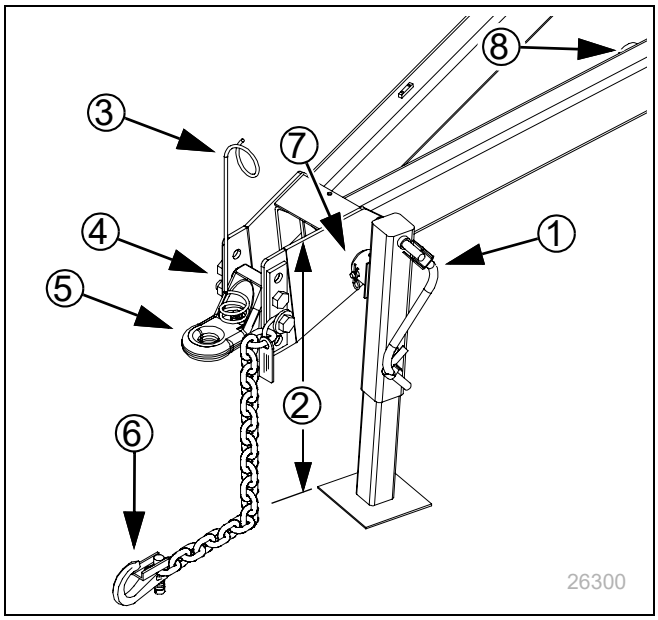

1. Using the jack stand crank (1), adjust the height (2) of the tongue to 31 inches (78.7 cm). The cart frame is level at this height.
2. Back the tractor up to the cart, and make sure that, when hitched, the cart tongue will remain at this height. If not, adjust either the height of the tractor hitch, or the location of the hitch strap (5).
3. To adjust the height of the hitch strap, remove the bolts (4), and reset the strap up or down.

   If the strap needs to be moved so far that only one bolt would be holding it, turn the strap over and remount the spring hose loop (3).
4. Use the jack stand crank to raise the hitch strap slightly.
5. Back the tractor so the drawbar is aligned with the strap hole.
6. Shut off the tractor and set the parking brake.
7. Insert and secure the hitch pin.
8. Attach the safety chain (6) to an anchor on the tractor.
9. Operate the jack stand crank to retract the inner leg and base several inches. Secure the crank handle in the spring clip on the stand.
10. Remove the pin (7) at the stand swivel. Remove the stand and re-pin it on the storage stob (8) inside the tongue.

Seed Hose Connections

Seed hose connections are made at the back of the cart and are clamped.

Connect primary seed hoses (tower feed hoses) from the drill to their respective outlets on the cart meter box, from left to right.

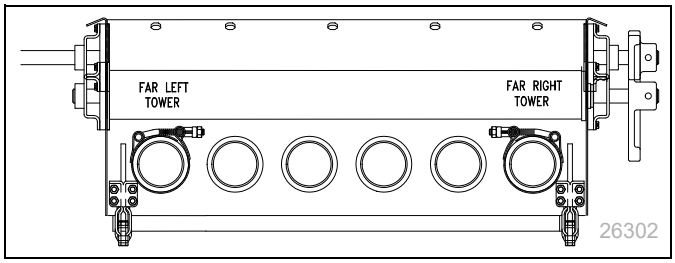

Skip any capped outlets (1) on the meter. Do not move caps. The meter shaft at capped outlets has fillers, and no flutes for metering seed.

At extreme outside outlets, align hose clamps so that screw hardware does not interfere with operation of meter box door handles.

Leave enough slack so the drill can be fully raised, lowered, folded, and unfolded.

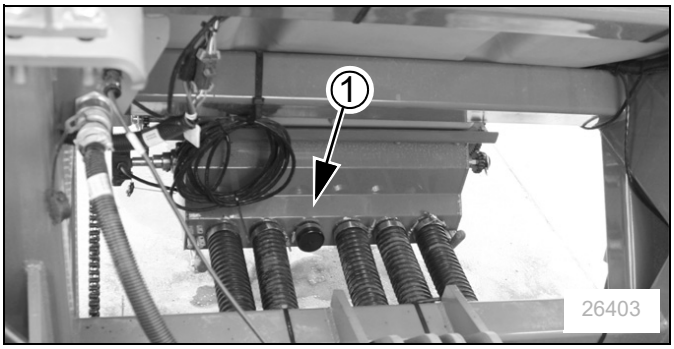

Electrical Connections

The cart has electrical connections in front and back. Make sure the tractor is shut down with accessory power off before making connections.

1. Plug in the lighting plug (1) to the outlet connector on the tractor. This connection is also passed through to the back of the cart for the trailing drill.
2. Plug in the seed monitor plug (2) to the outlet connector on the tractor. This connection is also passed through to the back of the cart.
3. Secure cables so they are clear of moving parts at the hitch.

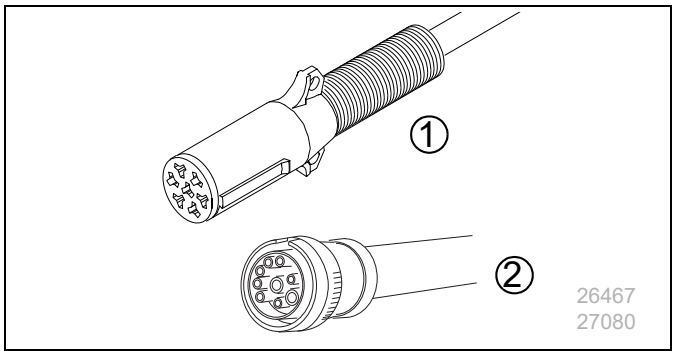

Before making electric or hose connections between cart and trailing drill, first make the rear cart-drill mechanical hitch connection. Refer to the drill manual.

For a trailing implement a lighting (1) and an implement lift switch connector (2) are always present. A monitor connection (3) may also be present, depending on implement options.

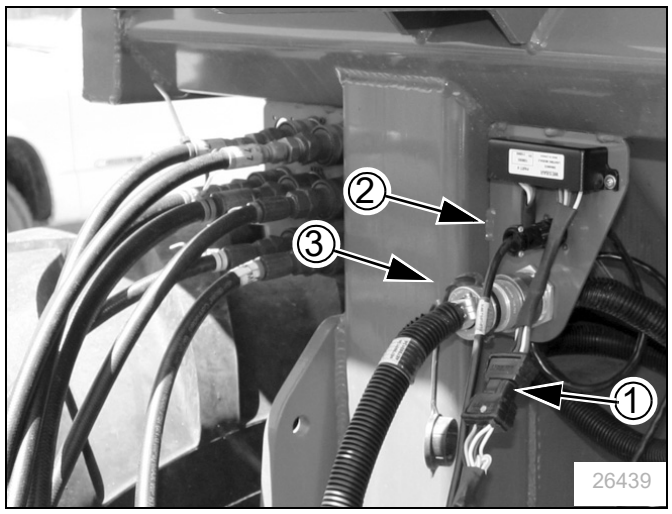

Consult the implement manual for drill-cart connections.

Hydraulic Connections

WARNING

High Pressure Fluid Hazard: *Only trained personnel should work on system hydraulics. Relieve pressure before disconnecting hydraulic lines. Escaping fluid under pressure can have sufficient pressure to penetrate the skin causing serious injury. Use a piece of paper or cardboard, NOT BODY PARTS, to check for leaks. Wear protective gloves and safety glasses or goggles when working with hydraulic systems. If an accident occurs, seek immediate medical attention from a physician familiar with this type of injury.*

The air cart consumes hydraulic power for one or two circuits, and has a low pressure sump return line. The cart also passes through three circuits necessary for drill operations.

Great Plains hydraulic hoses have color coded handle grips to help you hook up hoses to your tractor outlets. Hoses that go to the same remote valve are marked with the same color.

To distinguish hoses on the same hydraulic circuit, refer to the symbol molded into the handle grip. Hoses with an extended-cylinder symbol feed cylinder base ends. Hoses with a retracted-cylinder symbol feed cylinder rod ends.

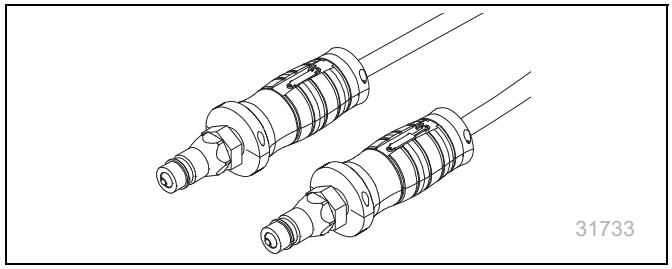

For hydraulic fan and drive motors, connect the hose under the retracted cylinder symbol to the pressure side of the motor. Connect the hose under the extended cylinder symbol to the return side of the motor.

The fan motor further requires hookup of a third line, which returns hydraulic fluid from the fan motor case.

NOTICE

For CTA implements, some tractors require an auxiliary flow kit to prevent damage to the hydraulic pump. Contact a factory trained service technician before hooking to cart and CTA implement.

If your tractor has a priority circuit for hydraulic motors, connect the fan (Black) to this circuit.

NOTICE

Seals in the hydraulic fan motor can be damaged if the return line is pressurized. Always connect the SUMP hose first and disconnect it last. The sump hose has a larger (1.06 inch) quick-connect coupling.

NOTICE

The hose and large connector labeled sump refers to high volume hydraulic motor return and should always be connected to the port on the tractor capable of handling high volume low pressure return oil. DO NOT connect this line to low volume case drain lines or low volume sump lines on the tractor. See tractor manufacturer's recommendations for high volume hydraulic motor return.

Make sure all tractor levers are in neutral or float, or tractor hydraulics are off, before making connections.

After making connections, check hose routing to ensure adequate slack and clearance from pinching or damaging the tractor or drill and its components.

Hydraulic Hookup

Color	Hydraulic Function
<none> (decal)	SUMP return: Cart: Hydraulic Fan Drills: Down Pressure
Black	Cart: Hydraulic Fan (Extend Side) Drill (NTA only): Fold Cylinders
Blue	Cart: <no function> Drills: Lift Cylinder
Green	Cart: Auger Drills: Marker Cylinders
Yellow	Cart: Hydraulic Drive Drills: Hydraulic Drive
<none>	Cart: Case Drain Drills: <no function>

Operating Instructions

This section covers general operating procedures. It assumes that setup items have been completed for both air cart and drill.

Experience, machine familiarity, and the following information will lead to efficient operation and good working habits. Always operate farm machinery with safety in mind.

General Description

Seed metering is powered by a cart tire and driven at a rate proportional to distance traveled, or by a hydraulic drive that uses a hydraulic motor as the power source for metering.

Each seed hopper is self-contained and has its own metering device. The seed hoppers are sealed and held at the same pressure as the meter boxes so metering is controlled mechanically, not by air-flow fluctuations. The metered seed is carried by air through the hoses to the distribution towers on the implement. These towers then divide the air and seed into individual rows.

The metering devices are driven through an electromagnetic clutch. The clutch only engages if the implement is lowered, operating an adjustable lift switch. Seed metering is shut off automatically when the drill is lifted for headland turns.

Pre-Start Checklist

- ❑ Lubricate the cart as indicated under Lubrication, **"Maintenance"** on page 44.
- ❑ Check the tires for proper inflation according to **"Torque Values Chart"** on page 63.
- ❑ Check the chains for proper tension and alignment.
- ❑ Check for worn or damaged parts and repair or replace before going to the field.
- ❑ Check all nuts, bolts and screws. Tighten bolts as specified on **"Torque Values Chart"** on page 63.
- ❑ Check height switch on implement.

DrillCommand Overview

Your machine is operated by using the DrillCommand software through your tractor console. DrillCommand controls, regulates, and monitors the functions of your air cart and drill.

Refer to your DrillCommand User Guide for a Quick Start guide to get started quickly and easily with your machine.

Walkboard Ladders

The walkboard between the hoppers has two ladders, one on each side of the cart. When the auger is latched in the storage position, it blocks use of the ladder on the left side.

The ladder on the left side is removable, to allow auger access under the rear meter box.

Both ladders have swing-down lower sections. These need to be stowed for transport and planting.

To stow a lower ladder section, swing it up until a spring-loaded pin (1) engages on the right side of the step frame. Make sure the pin engages, or the ladder may swing down during cart movement.

To lower the ladder section, pull the pin out and swing the ladder section down.

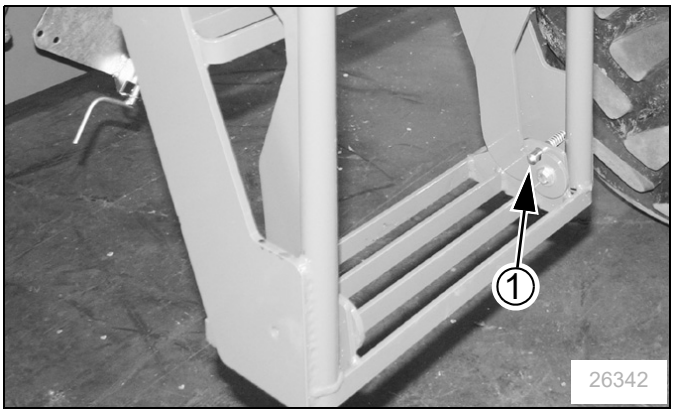

Removing the Left Ladder

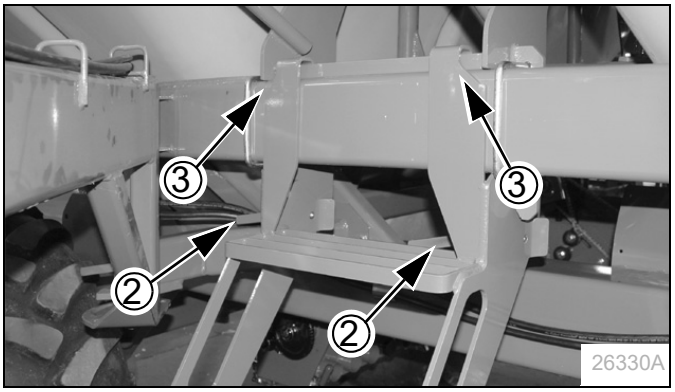

If unloading the rear hopper, the left side ladder must be removed for auger access to the rear meter.

1. Swing up the lower ladder section and pin. This makes the ladder easier to handle.
2. Latch open the pins (2) that secure the ladder section to the cart frame.
3. Swing the ladder out and lift the hooks (3) off the outer rung of the step at the cart frame.
4. Set the ladder down clear of the operating area.

To re-install the left ladder:

1. Release the pin lever arms.
2. Place the hooks of the ladder over the outer rung of the step at the cart frame.
3. Swing the ladder onto the cart until the pins re-seat.

Hopper Lids

Keep hopper lids tightly closed for operations. Keep loosely closed for storage. Open only for material loading, hopper clean-out, and maintenance.

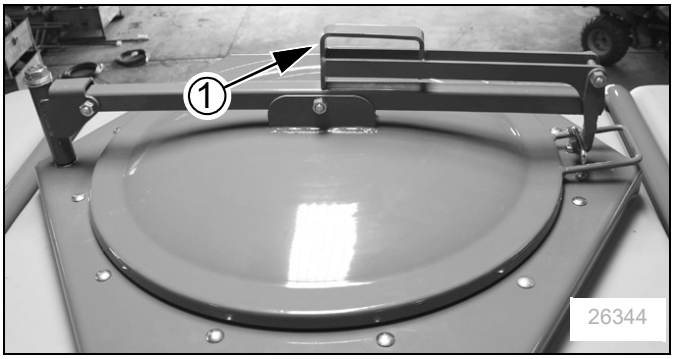

Opening the Lid

1. Lift handle (1).
2. Swing handle out until hook (2) releases from U-bolt (3).
3. Move hook clear of U-bolt and close handle.
4. Lift lid slightly at pivot end to clear strainer (4).
5. Swing lid away from walkboard. Open only enough to accomplish the current task.

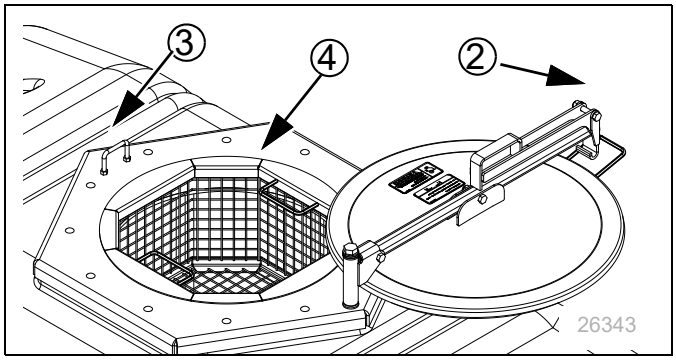

Closing the Lid

1. Swing lid over opening until hook (2) is centered on U-bolt (3).
2. Open handle (1) and engage hook on U-bolt.
3. Close handle for operations or short-term parking.

   For long-term storage, do not engage hook or latch handle, to avoid deforming the seal. See “**Storage**” on page 32.

Strainer

Each hopper is equipped with a strainer to:

- catch large foreign matter in seed and materials,
- prevent entry by animals if lid left open, and;
- discourage hopper entry by children.

Leave the strainer in place except during strainer and hopper cleaning.

For strainer or hopper cleaning, lift out the strainer with the lid fully open.

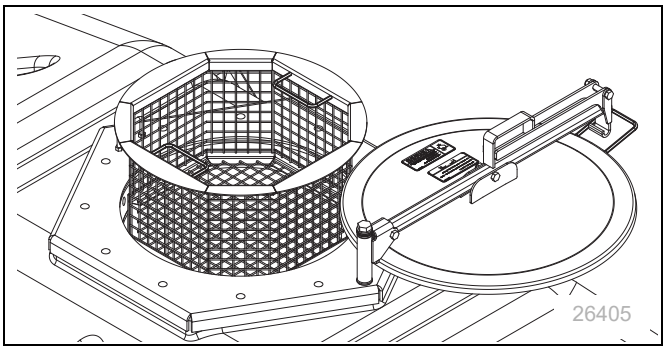

Check the strainer for residue before each loading operation. Remove, empty, and return it to the hopper.

Meter Doors

Each meter box has two access doors on the bottom:

- Front (1) - Clean-out (for emptying hopper)
- Rear (2) - Calibration (for meter sampling and meter clean-out)

The doors are closed during transport, loading and planting. They may be open slightly in storage if the hopper was not completely dry at clean-out.

The doors need to close and seal tightly during planting. Periodically inspect the lever clamps for proper tension, and inspect the seals for strength and elasticity.

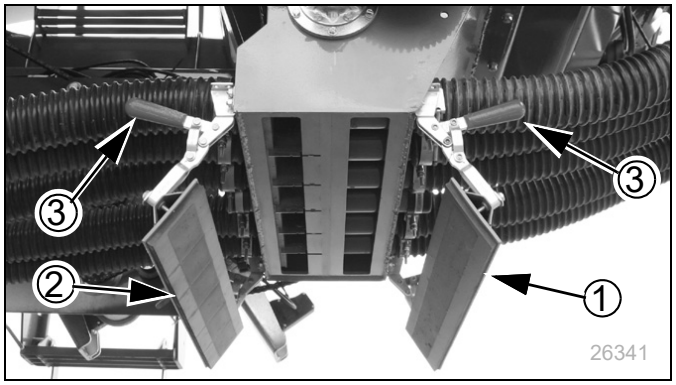

Figure 2Meter Doors Open

Opening Meter Doors

NOTICE

Material Loss Risk: *Do not open the front clean-out door until preparations have been made to capture any material to be re-used. Any material present will flow immediately, possibly in large volume, as soon as the door is open.*

1. Pull out on a clamp handle (3) just until it is loose.
2. Pull out on the other clamp handle. The door normally will swing down on its own. If not, pull it open by hand.

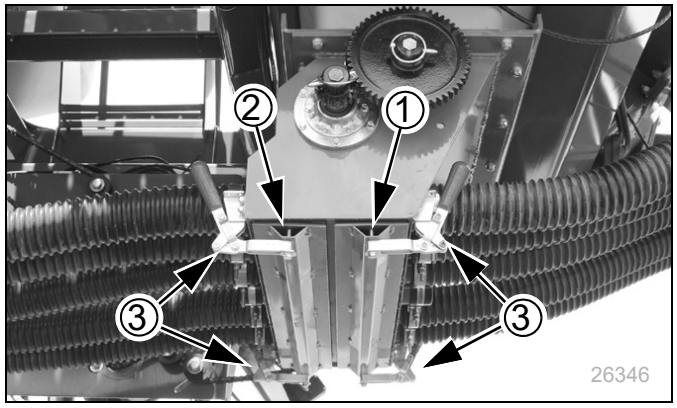

Figure 2Meter Doors Closed

Closing Meter Doors

Make sure the clamp handles are out or down (not up), or the door will not close.

1. Use a clean rag to wipe any residual material from the face of the seals on the door, and from the bottom face of the meter box.
2. Swing the door up into closed position.
3. While holding the door closed, swing each clamp handle up, past vertical.
4. Inspect the door closure for possible air leaks. Replace any deformed seal or damaged latch clamp.

Meter Hand Crank

A hand crank is provided on the left side of the cart, near the ladder, for manual operation of the meters.

The hand crank is used for:

- calibration of the meter setting for ground drive systems, and
- clean-out of the meter flute chamber.

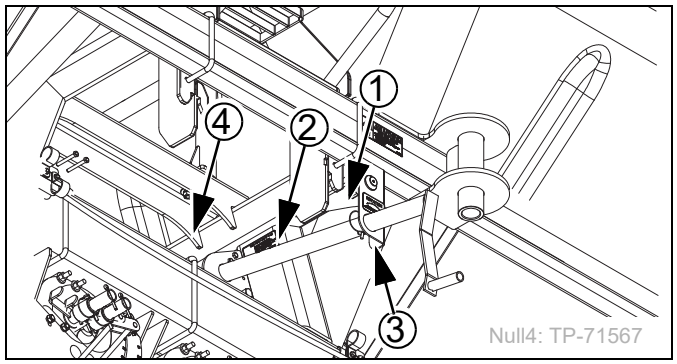

Figure 3Hand Crank Storage

1. Remove the pin (1) from the crank shaft behind the outer crank bracket.
2. Pull the crank (2) out of the inside bracket (3) and slide the end of the crank shaft onto the outside end of the meter jackshaft (4). Re-insert the pin in the crank shaft so it does not get lost.
3. Turn the hand crank counter-clockwise to simulate meter operation during planting.

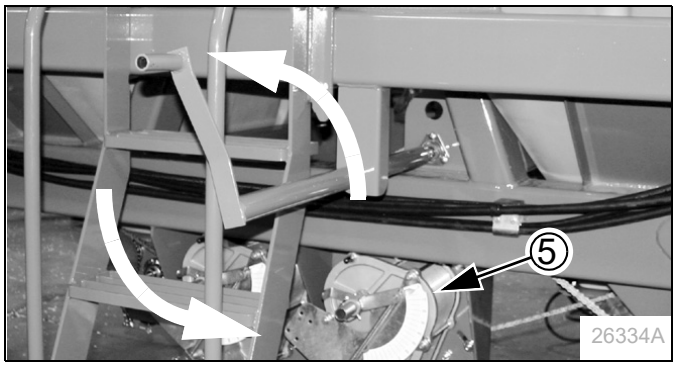

Figure 4Hand Cranking Direction

NOTICE

Equipment Damage Risk: *Rotate the hand crank counter-clockwise only. Rotating clockwise can cause meter gearbox damage.*

In general, operate the crank as fast as is comfortable. For reference, at a field speed of 6 mph, the jackshaft rotates at 150 rpm (2.5 turns per second).

For clean-out, make sure the variable rate gearboxes (5) are set:

- above 10 if the final drive range gears are in high range mode, or
- above 80 if the final drive range gears are in low range mode.

To change variable rate gearbox and final drive range gearing see “**Setting Material Rates**” on page 34.

NOTE:
If variable rate gearbox is set to 0, operating the hand crank may fail to clear the meters of seed.

Ground Drive Chain Lockout

To minimize wear during transport, the chain drive system up to the clutch can be locked out at the driving wheel hub.

The lockout pin receiver (1) is on the primary 60T sprocket (2) at the wheel hub. Depending on where rotation stopped at the last cart movement, the receiver may be hidden behind the axle bolt plate (3).

When engaged for chain drive operations, a spring-loaded pin plunger in the receiver seats in a hole in the lockout hub plate behind the sprocket, so that both turn together. The cross-pin (4) in the plunger is in the deeper of the two detent positions in the receiver.

To lock out for transport, pull the cross-pin, rotate it one quarter turn, and position it in the shallow receiver detents.

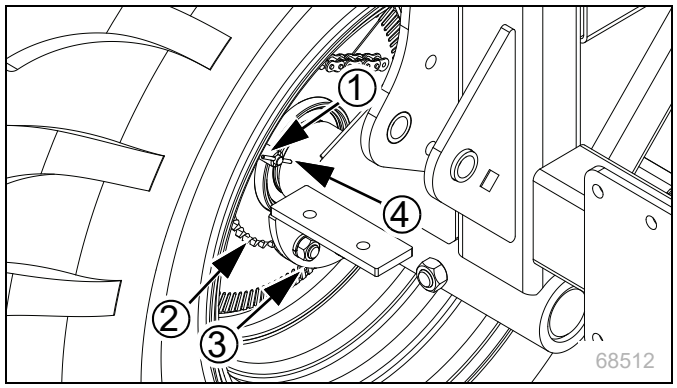

To disengage, pull the cross-pin (4), rotate it one quarter turn, and position it in the deeper receiver detents.

Unless the mating hole in the lockout hub plate just happens to be under the pin receiver, the pin will not move all the way into the detent; however, the pin will engage the hole automatically at next cart movement.

Auger

DANGER

Electrocution ***Hazard:***

Keep clear of overhead power lines when positioning auger. If it contacts a power line, nearly all metal parts of the cart, tractor, and drill will have lethal voltage present, and anyone touching them can complete the circuit to ground, resulting in serious injury or death. With very high voltages, electrocution can occur without direct contact.

DANGER

Rotating ***Auger*** ***Hazard:***

To prevent serious injury or death, read instructions and safety information before operation. Keep hands, feet, hair, and clothing away from rotating auger. Do not remove or modify any guards. Do not operate auger arm actuator while auger is in use. Make sure the locking pin is locked in position before operating auger. Keep children well clear of work area.

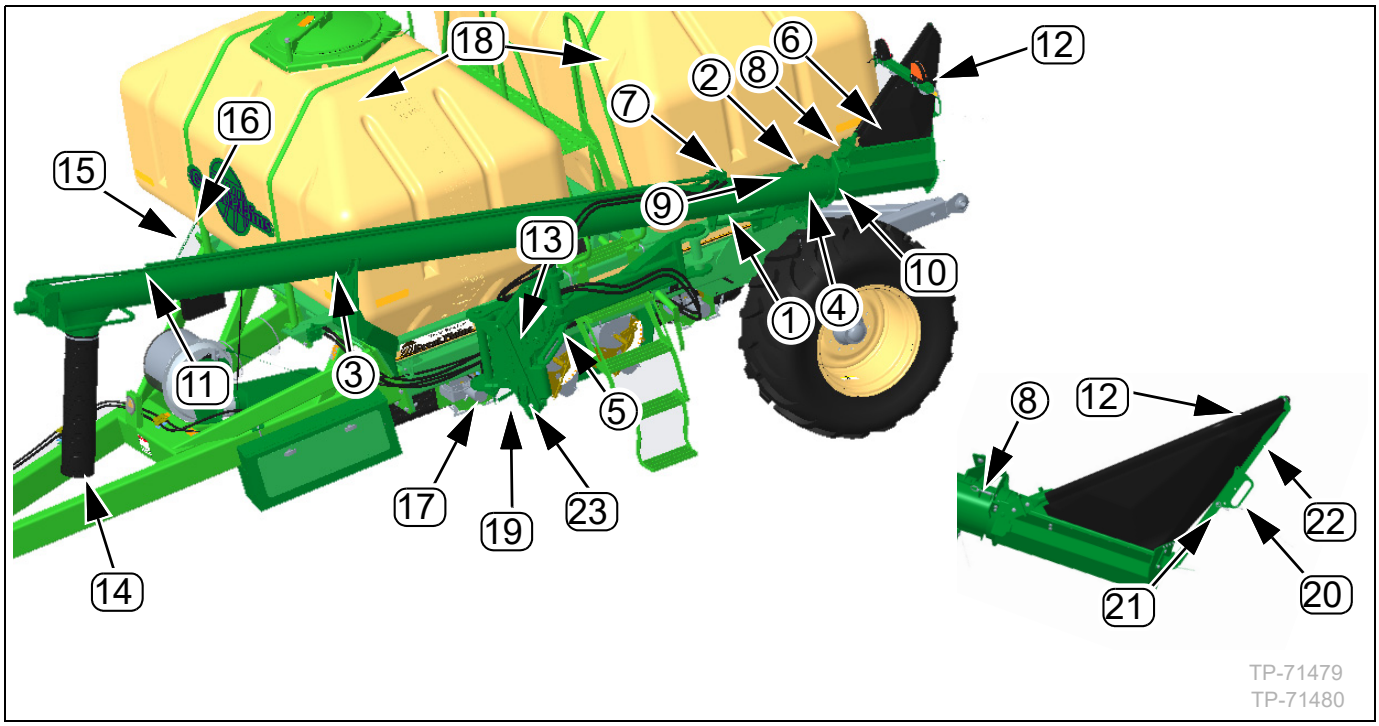

(1) Auger handle
(2) Auger carrier
(3) Front auger rest
(4) Rear transport lock
(5) Swing arms
(6) Auger inlet
(7) Direction valve
(8) Hopper latch pin
(9) Lock pin
(10) Latch handle
(11) Direction valve control handle
(12) Auger hopper
(13) Auger arm actuator
(14) Auger discharge hose
(15) 16” chain
(16) Snap link
(17) Locking pin
(18) Hopper bins
(19) Auger arm actuator controller
(20) Auger flex hopper adjustment handle
(21) Lock pin
(22) Flex hopper support bar
(23) Controller holder

To position the auger for use:

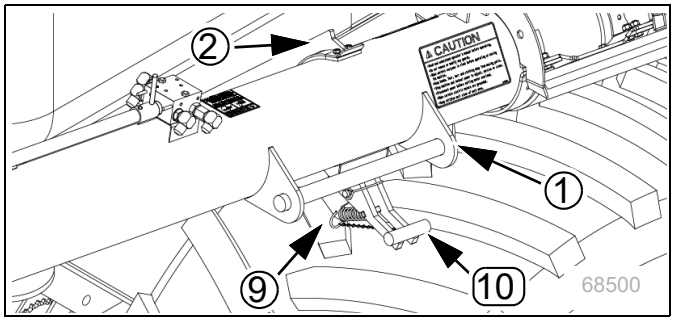

1. Unlatch locking pin (17).
2. Remove the lock pin (9).
3. Push down on the latch handle (10) to release the rear transport lock (4).
4. Grasp the auger handle (1).
5. Lift the auger out of the auger carrier (2) and front auger rest (3).
6. Pull the auger away from the cart and set the auger hopper (12) on the ground. The auger will pivot on the swing arms (5) for easy handling.
7. Insert lock pin (9) near rear transport lock (4).
8. Pull the hopper latch pin (8) on the auger hopper (12).
9. Pivot auger hopper (12) into a face-up position by rotating auger hopper away from machine by 45 degrees. Set the auger hopper down on the ground.
10. Insert hopper latch pin (8).
11. Position the auger so that the auger hopper (12) is positioned on the ground, approximately 8 feet away from machine, equally between the hoppers. Lift the auger and position so that the outlet end of the auger is easily accessible to release the auger discharge hose (14) from the ladder between the hopper bins (18).
12. If preferred, for added stability, the locking pin (17) may be engaged. However, the locking pin may need to be released to allow for some positioning.
13. From the ladder, unsnap snap link (16) on chain (15) to allow the auger discharge hose (14) to hang freely in a downward position.
14. Re-secure the end of 16” chain (14) with the snap link (16) to auger.
15. Position auger for desired task; using the auger arm actuator (13) as necessary. See “**Auger Arm Actuator**” on page 23.

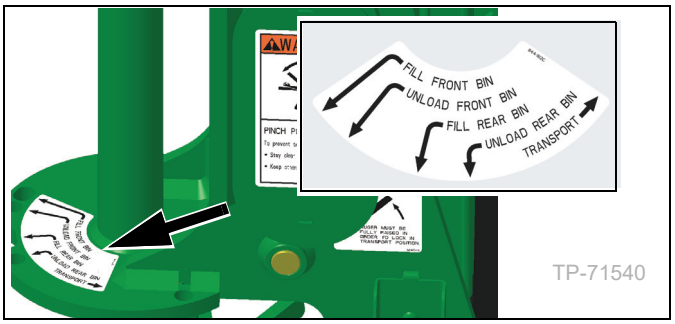

To position the auger for transport:

1. If necessary, unlatch locking pin (17).
2. Use the auger arm actuator to raise the swing arms (5) until fully extended. See “**Auger Arm Actuator**” on page 23. You may need to fold the auger swing arms.
3. Position the auger so that the auger hopper (12) is on the ground, approximately 8 feet away from machine, equally between the hoppers (18). Lift the auger and position so that the outlet end of the auger is easily accessible to release the auger discharge hose (14) from the ladder between the hopper bins.
4. From the ladder, use the snap link (16) attached to the chain (15) to secure the auger discharge hose (14) to the auger.
5. From the ground, pull the hopper latch pin(8) on the auger hopper (12).
6. Pivot auger hopper (12) by rotating auger hopper towards machine by 45 degrees.
7. Insert hopper latch pin (8).
8. Extend auger flex hopper. See “**Auger Flex Hopper**” on page 24.
9. Grasp the auger handle (1).
10. Position the auger into the auger carrier (2) and front auger rest (3).
11. Aligned the auger handle (1) and latch handle (10) to engage rear transport lock (4).
12. Insert lock pin (9) near rear transport lock (4).
13. Engage the locking pin (17) in the transport position.

Auger Arm Actuator

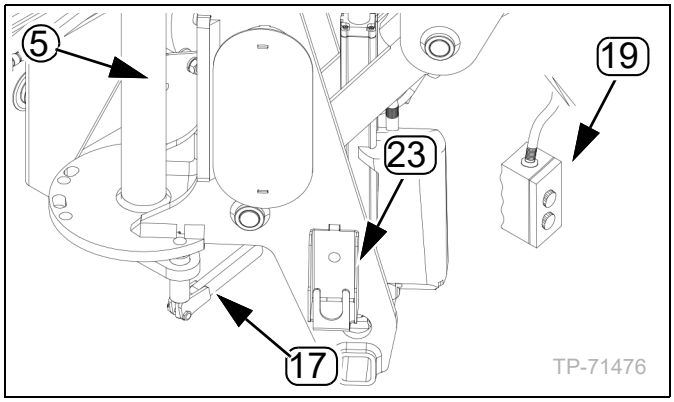

The auger arm actuator will move the auger swing arms up and down to allow for easy positioning of the auger. The height position of the auger swing arms will determine the working area of the auger. Height adjustments of the auger swing arm will be necessary depending on the task and desired auger work area or auger reach.

Auger arm actuator heights adjustments are made by a controller mounted on the left-side of the auger swing arm mount. The up arrow will move the auger swing arm upwards. The down arrow will move the auger swing arm downwards.

To make auger swing arm height adjustment:

1. Fold auger swing arms (5), to allow for the locking pin (17) to be engaged.
2. Using the controller (19) stored in the controller holder (23), press the up/down arrow to raise/lower the auger swing arms (5) as needed.

NOTICE

Equipment Damage Risk:
Use of the auger arm actuator while the auger is seated in the front auger rest and/or auger carrier may cause damage to your equipment and/or other equipment in the nearby area, such as a folded trailing drill. Make sure the auger arm is not seated in the front auger rest and that the auger arm is free to move during positioning without obstructions in the work area.

Front Auger Rest

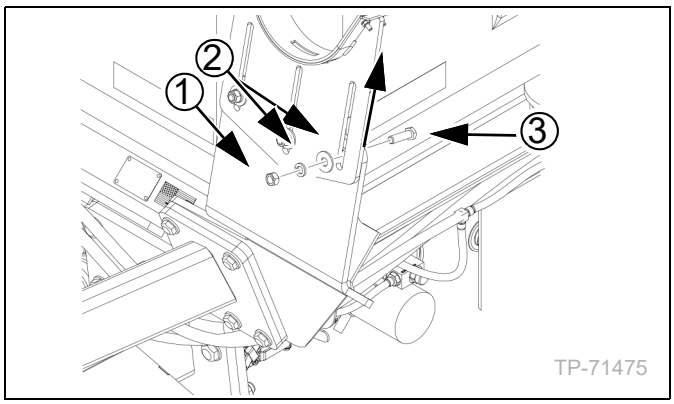

At times the front auger rest height may need to be adjusted. You will need a ladder along with some basic tools to complete the adjustment. To adjust the front auger rest height:

1. The adjustment will need to be made while the auger swing arms height is fully extended. See “**Auger Arm Actuator**” on page 23.
2. Position and secure the auger swing arms so that you have clear access to the front auger rest.
3. Position a ladder on solid, even ground so that you have clear access to the front auger rest.

DANGER

Falling Hazard:
To avoid serious injury or death from fall, follow all ladder manufacturer’s recommendations for use, paying special attention to inspect ladder’s integrity, ensure ground surface is even, flat and free of debris, and avoid wearing loose fitting clothing.

4. Loosen the washers (2) and nuts (1) to slide bolts (3) into the desired position on the weldment.
5. Securely tighten the three sets of bolts, washers, and nuts to the weldment.

Auger Flex Hopper

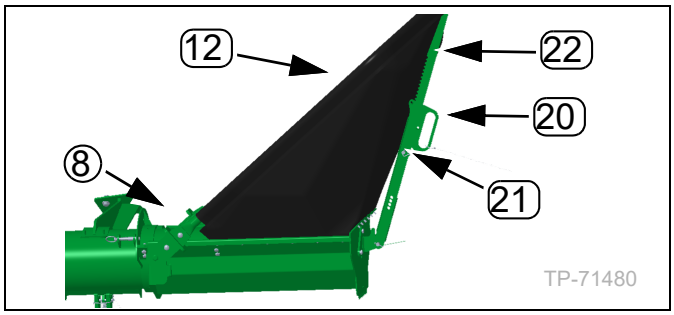

The auger flex hopper allows for easy positioning of the auger hopper during tasks such as unloading material. The auger flex hopper should be stored and transported while fully extended. The lock pin (17) will need to be locked in “transport” position.

To collapse auger flex hopper:

1. Place auger hopper (12) in a face-up position.
2. Move lock pin (21).
3. Grasp the auger flex hopper adjustment handle (20) and push inwards. The flex hopper support bar (22) will shorten and ratchets into place. The support hoop will collapse.
4. Replace lock pin (21).

To extend auger flex hopper:

1. Place auger hopper (12) in a face-up position.
2. Remove lock pin (21).
3. Grasp the auger flex hopper adjustment handle (20).
4. Push slightly inward and then pull outwards until the flex hopper support bar (22) fully extends and ratchets into place.
5. Replace lock pin (21).

NOTE:

During material unloading, it is necessary to extend auger flex hopper after it is in position for unloading under the meter box.

Auger Hydraulic Controls

WARNING

High Pressure Fluid Hazard:
Relieve pressure before disconnecting hydraulic lines. Escaping fluid under pressure can have sufficient pressure to penetrate the skin causing serious injury. Use a piece of paper or cardboard, NOT BODY PARTS, to check for leaks. Wear protective gloves and safety glasses or goggles when working with hydraulic systems. If an accident occurs, seek immediate medical attention from a physician familiar with this type of injury.

Operating the auger involves one or two valves on the cart, and the tractor lever for the hydraulic circuit.

Diverter Valve

CAUTION

Do not operate the diverter valve with the hydraulic circuit energized. Unexpected auger, fan, or drill movements can result. Do not use this valve as the start-stop control for the auger.

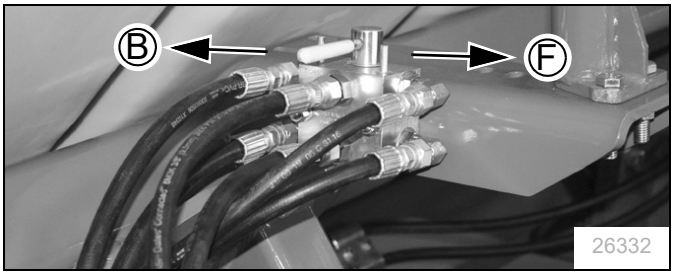

The diverter valve is located at the front left corner of the front hopper. Use the diverter valve to select between the auger and marker operation.

Operate the valve with the tractor hydraulic circuit off, or set to neutral or float. The handle has two positions:

(F) Handle forward - Auger position. Make sure auger control is in center-off position before moving handle to this position.

(B) Handle back - Marker position. Make sure circuit is off before moving handle to this position.

Auger Direction Valve

The auger direction valve (7) toward the inlet end of the auger tube controls the direction of auger rotation. This valve is center-off.

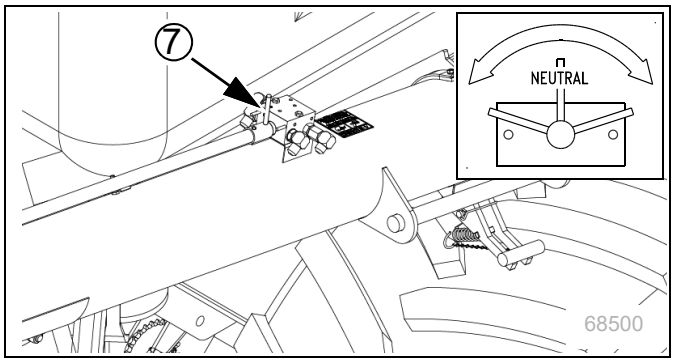

To allow flow control by an operator at the outlet end of the auger, the control handle for the valve has an extension and front handle (11).

Use this valve as the start-stop and forward-reverse control for the auger. Set the valve to center-off when not moving material.

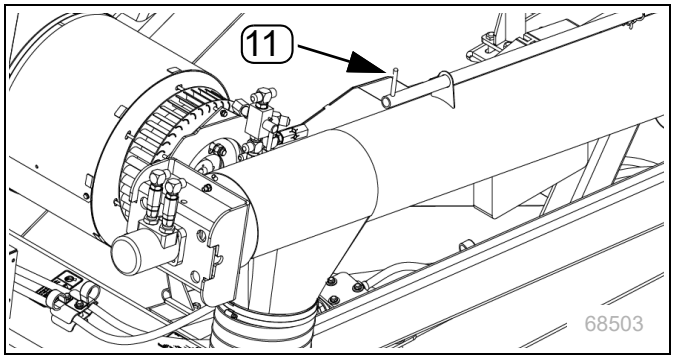

Loading Material

DANGER

Entrapment and Suffocation Hazard:
Never enter a hopper for loading or unloading. Once used for hazardous fertilizer or treated seed, dangerous concentrations of fumes may be present even in an empty hopper with the lid open. Even with small amounts of otherwise harmless material loaded, the atmosphere inside the hopper may have insufficient oxygen or high levels of choking dust.

1. Securely hitch cart or drill and cart to a tractor with adequate weight and power.
2. Park on solid, level ground.

NOTE:
Static tongue weight of a loaded cart is about 9,500 pounds on level ground and more when facing downhill.

3. At each hopper to be loaded, open the meter box clean-out door if it was completely closed. If the cart has been parked for more than a day, condensation may have caused moisture to accumulate.
4. Wipe clean the seals and meter bottom flanges.
5. Close and latch clean-out doors.
6. With the cart fan running, check hopper-lid and meter-box seals carefully for air leaks. It is recommend to run the fan for 15 minutes while inspecting for leaks. Adjust hopper latch or replace seals, as needed, to prevent leakage and material loss.

NOTICE

Population Risk:
Before filling cart for the first time, and at the beginning of each season, check bins for leaks. A small air leak can cause large variations in seeding rates.

7. Shut off all hydraulic power to cart.
8. Set the auger direction valve control handle (11) to center-off position.

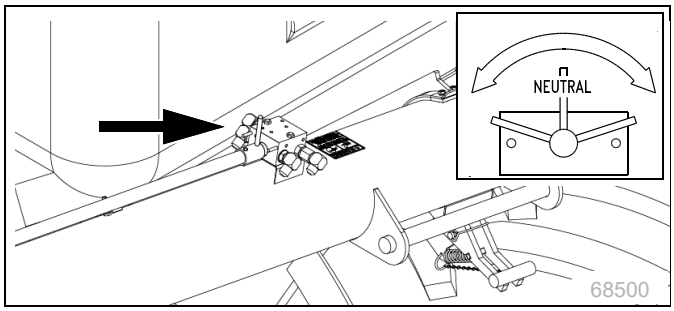

9. Set the diverter valve to the forward (auger) position, as indicated by a decal near the valve.
10. Climb the ladder to the walkboard. Unlatch the hopper lid and pivot it fully open.

NOTE:
If you do not want to open lid until just before moving material, at least unlatch the lid. The auger nozzle may be in the way of unlatching if you wait until after auger positioning.

11. Check that the strainer basket is in place in the top of the bin. Remove any foreign material from the strainer.

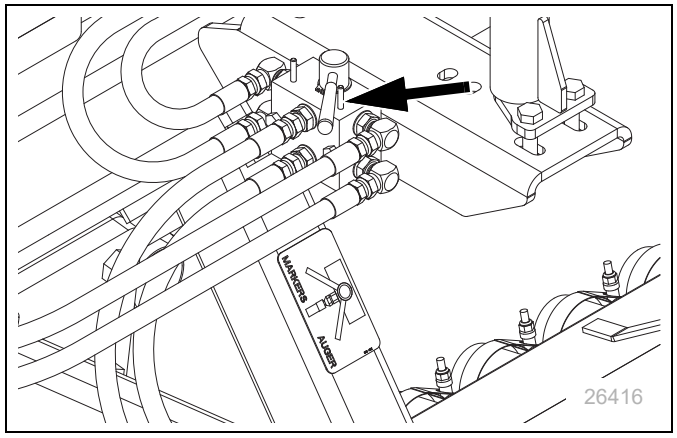

DANGER

Electrocution ***Hazard:***
Keep clear of overhead power lines when positioning auger. Contact with power lines will result in serious injury or death.

12. Place auger in position for use. See "**To position the auger for use:**" on page 22.
13. Position swing arms and engage locking pin (17) in the appropriate position. Both front and rear hoppers can be loaded from a single distribution point (inlet hopper location) at approximately 8-1/2 feet (A) out from the hoppers and centered between the hopper bins (18).

In order to position the auger properly, position the auger by grabbing and moving both the inlet and outlet ends.

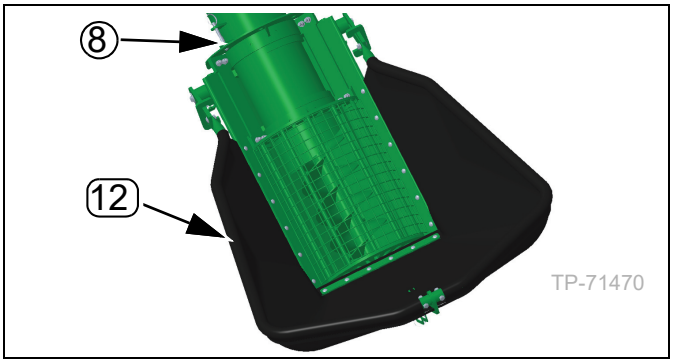

14. Swing the auger discharge hose (14) until it is centered over a hopper opening.
15. Position your grain container for unloading into the auger hopper (12).

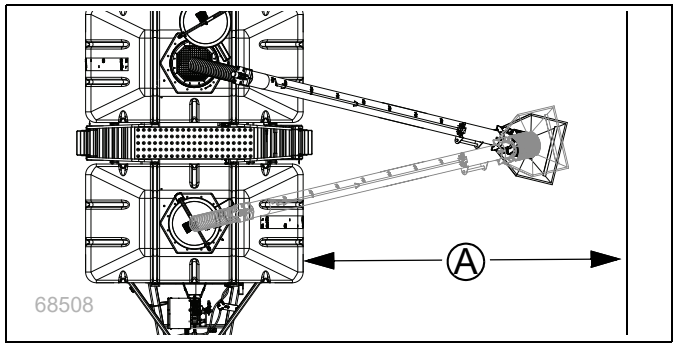

DANGER

Rotating Auger Hazard:
To prevent serious injury or death, keep hands, feet, hair, and clothing away from rotating auger. Do not remove or modify any guards. Keep children well clear of work area.

16. Energize tractor hydraulics for auger. You may need to tie the control lever in place or adjust the detent pressure on your tractor.
17. Start the auger by turning the auger direction valve (7) center-off to the left or right. Visually check auger for correct rotation direction. Reverse if needed.

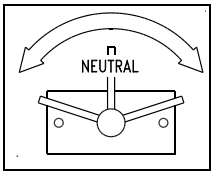

12713

18. Slowly turn on material flow and fill hopper.

NOTE:
Hopper fill level indications are molded into the side of the hopper.

19. When hopper is full, turn off the auger by moving the auger direction control to the center-off position.
20. Briefly run auger in reverse to return any left over material to the auger hopper for recovery or disposal.
21. Swing the auger so the auger discharge hose is centered over the other hopper opening. If necessary, reposition your grain container for unloading into the auger hopper. Repeat step 16 through step 19 to fill the other hopper.
22. When hopper(s) are filled, turn off the tractor hydraulics.
23. Return the auger to storage position. See “**Auger Storage**” on page 32.

CAUTION

Moving Parts Hazard:

Do not turn the auger hydraulic diverter handle until the hydraulics have been shut off. If the diverter is moved with hydraulics on, the other equipment may suddenly begin moving.

24. When circuit is off, set diverter handle to up.
25. Check that the strainer basket is in place in the top of the hopper bin. Remove any foreign material from the strainer.
26. Wipe any grain or foreign matter from lid-seal area on top of each hopper.
27. Close lids and latch securely.

Unloading Material

The auger can be swung under the cart to unload material from the hoppers. You will need to collapse the auger flex hopper for easier positioning under the meter boxes and extend the auger flex hopper for the unloading operation. See “**Auger Flex Hopper**” on page 24. The material must be in a free-flowing state. If the material will not flow out the clean-out door, see “**Problem Clean-Outs**” on page 47.

For normal unloading:

1. Securely hitch cart or drill and cart to a tractor with adequate weight and power.
2. Park cart on solid, level ground.
3. Shut off all hydraulic power to the cart.

DANGER

Electrocution Hazard:

To prevent serious injury or death from electric shock, keep clear of overhead power lines when positioning auger.

4. Check that the auger direction valve control handle (11) on the auger is in the center-off position.
5. Unlatch the lock pin (8).
6. Place auger hopper (12) in a face-up position.
7. Engage lock pin (8).
8. Collapse auger flex hopper (22). See “**To collapse auger flex hopper:**” on page 24.
9. When using ground drive, install the meter hand crank. It will be used to empty the flute chamber of the meters. See “**Meter Hand Crank**” on page 19.

10. For clean-out, make sure the variable rate gearboxes are set to:
    - above 10 if the final drive range gears are in high range mode, or
    - above 80 if the final drive range gears are in low range mode.

    If set to 0, operating the hand crank may fail to clear the meters of seed.

    To change variable rate gearbox and final drive range see “**Setting Material Rates**” on page 34.
11. If unloading the rear hopper:
    - Remove the left-hand ladder. See “**Removing the Left Ladder**” on page 18.
    - Collapse and extend auger flex hopper as needed while positioning auger. See “**Auger Flex Hopper**” on page 24.
12. Position the auger so the auger hopper (12) is under the meter box of the hopper you will be unloading.
13. Extend auger flex hopper (22). See “**To extend auger flex hopper:**” on page 24.
14. Position your grain container under the auger discharge hose (14).
15. Before starting the tractor hydraulics, check the configuration of the tractor and cart hydraulics. Check that the diverter valve is set to auger (A) and the auger valve is in neutral.
16. Start the tractor’s hydraulic system and engage the circuit for the auger. You may need to tie the tractor control lever in place.

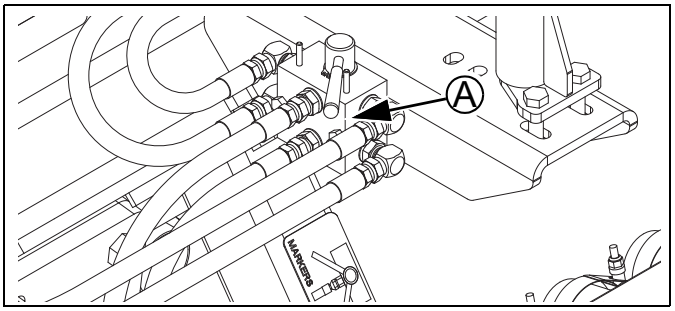

DANGER

Rotating Auger Hazard:
To prevent serious injury or death, keep hands, feet, hair, and clothing away from rotating auger. Do not remove or modify any guards. Keep children well clear of work area.

CAUTION

Chemical Hazard:

Follow manufacturer’s recommendations for protective equipment when working with treated seeds.

17. Start the auger by turning the auger direction valve (7) left or right. Visually check auger for correct direction of rotation. Reverse handle if needed.

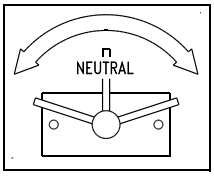

12713

18. Slowly open the clean-out door on the bottom of the meter. This is the front door of the two doors on the meter.
19. When material flow from the clean-out stops, open the calibration door to ensure complete clean-out. The calibration door is the rear door.
20. Turn the hand crank counter-clockwise to empty meter. Turn until there is no more material flow.

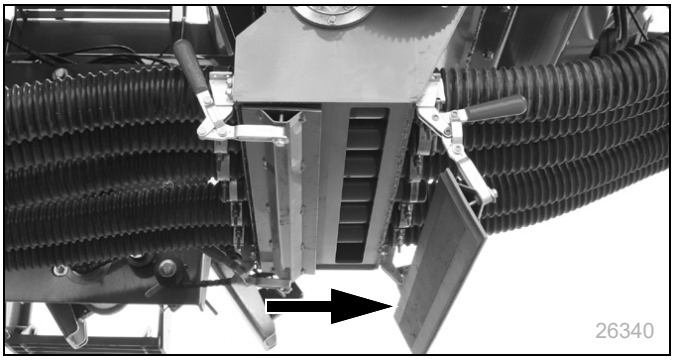

26340

NOTICE

Equipment Damage Risk:
Rotate the hand crank counter-clockwise only. Rotating clockwise can cause meter gear box damage.

21. Set the auger direction valve (7) to center-off position.
22. Collapse auger flex hopper (22). See “**To collapse auger flex hopper:**” on page 24.
23. Move auger hopper (12) out from under cart.
24. Position the auger hopper (12) under the other hopper and repeat step 12 through step 23.
25. Remove hand crank shaft, return hand crank to storage position.
26. If storing at end of season, or if concerned about left over seed in the auger tube, reverse the directional control on the auger until no seed remains in the auger tube.
27. Set the tractor circuit for the auger to neutral, or shut down tractor hydraulics completely.

CAUTION

Moving Parts Hazard:

Do not move the auger hydraulic diverter valve to the forward position until the hydraulic circuit has been shut off at the tractor. If the diverter is moved with hydraulics on, the drill markers will suddenly begin moving.

28. With auger circuit off, set diverter handle back.
29. Clean out auger hopper (12) by pulling up the lock pin (8) and rotating the auger hopper to dump materials.
30. Re-attach left-hand ladder, if removed.
31. Fully extend the auger arm actuator. See “**Auger Arm Actuator**” on page 23.
32. When cart is empty, position the auger hopper (12) for transport or storage. See **“Transport”** on page 30 or **“Auger Storage”** on page 32.
33. Place auger in the front auger rest (3) and rear carrier (2).

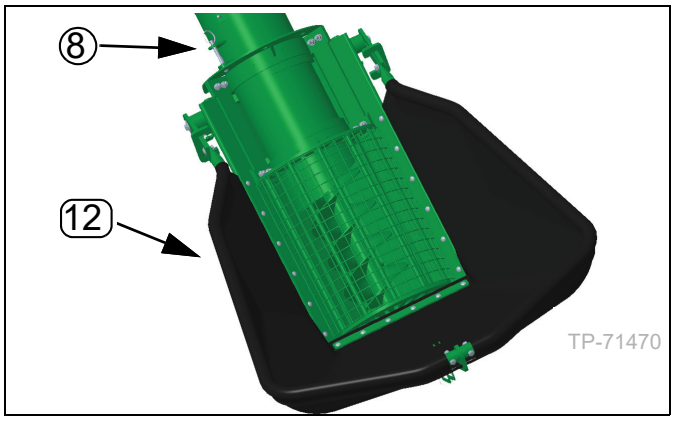

34. Wipe top and bottom of meter-box seal flanges, making sure all material is removed. Look for material caught between seal and flange.
35. Close clean-out and calibration doors. Inspect, clean, close, and latch hopper lids if they were open for unloading.

Field Operations

Make sure all pre-operation checks have been made on both air cart and drill, and cart is loaded with seed and any treatments.

Single Hopper Operation

When only one hopper is being used, disable the meter of the empty hopper.

Ground Drive

- For short planting sessions, set the variable rate gearbox control arm to zero. The input shaft to the gearbox still rotates, but the output shaft does not, and no material is metered.
- For extended planting sessions, loosen the idler and remove the gearbox input drive chain. This minimizes wear on the gearbox.

Hydraulic Drive

See your DrillCommand guide for information.

Fan Speed

Fan speed is monitored and reported by the seed monitor, but is manually controlled. The seed rate depends on the seed type and any treatments. See "**Fan Speed Adjustment**" on page 36 for further information.

Fan shut-off valve (1) must be open for the fan to operate.

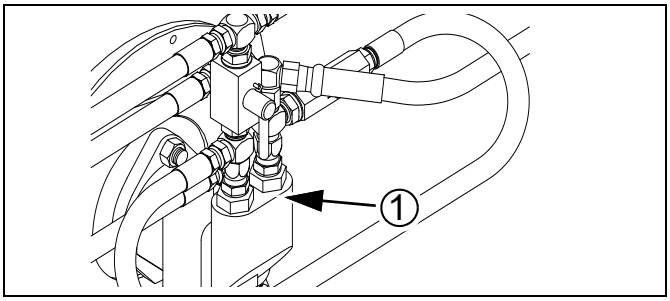

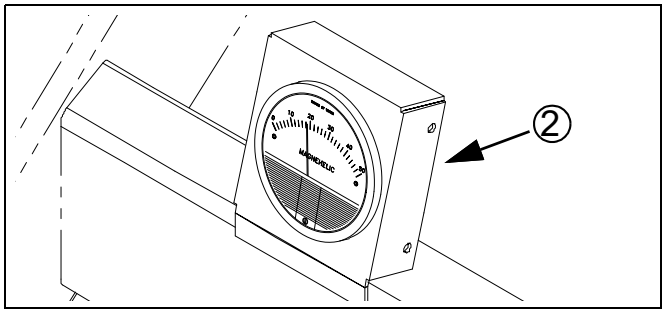

NOTICE

Equipment Damage Risk:
Always engage the fan with the tractor at a low engine speed. Engaging the fan when the tractor is at high speed may cause fan damage. Do not reverse hydraulic flow with the fan running.

The proper reading for the Magnehelic® air pressure gauge (2) is 12 to 25 inches of water. A sudden drop in pressure is a sign of a possible leak which can negatively affect seeding.

Final Field Checklist

- ❑ Set seed meters per chart and calibration.
- ❑ Check that diverter valve is set to marker or fan.
- ❑ Check that fan shut-off valve is open (fan enabled)
- ❑ Set fan to speed suitable for seed. Watch fan at start-up to ensure correct direction of rotation.
- ❑ Run fan for at least 15 minutes before planting.
- ❑ Check that the air pressure gauge is 12 to 25 inches of water pressure.
- ❑ Check that all seed hoses are secure.
- ❑ Check for air leaks at lids and meter box seals.
- ❑ Complete drill checklist.

Planting

1. Lower drill 5 to 10 feet before initial seeding point.
2. Pull forward and begin planting.
3. Raise drill for turns (meters stop automatically).

📖 **NOTE:**
Be aware of the 5 to 10 feet of drill-lowered operating distance required for seed to reach the row units. If you stop in the middle of a pass, raise the drill and back up 10 feet before restarting seeding.

Transport

DANGER

Electrocution ***Hazard:***
To prevent serious injury or death from electric shock, keep clear of overhead power lines when transporting, folding, unfolding, or operating all air drill components. Machine is not grounded. At higher voltages, electrocution can occur without direct contact.

WARNING

Transporting ***Hazard:***
Towing the drill at high speeds or with a vehicle that is not heavy enough can lead to loss of vehicle control. Loss of vehicle

control can lead to serious road accidents, injury, and death. To reduce the hazard do not exceed 20 mph (32 km/h). Do not tow an assembly that, when fully loaded, weighs more than 1.5 times the weight of the towing vehicle.

Great Plains recommends transporting the air cart without seed loaded. Although designed for highway movement with full hoppers, the additional weight of seed may cause the implement assembly to exceed the rated ability of the tractor, makes the assembly more difficult to control and stop, and increases wear on cart tires and wheel bearings.

Refer to **"Specifications and Capacities"** on page 55 for minimum towing vehicle capacity.

Auger Transport

To store the auger for transport, the auger flex hopper should be tilted towards the machine with the locking pin securing the auger flex hopper in it's extended position. This protects the auger from damage from movement of the trailing implement on uneven terrain, and minimizes collection of debris thrown by the tire. When positioning the auger hopper, make sure the lights and reflectors (1) will be visible during transport.

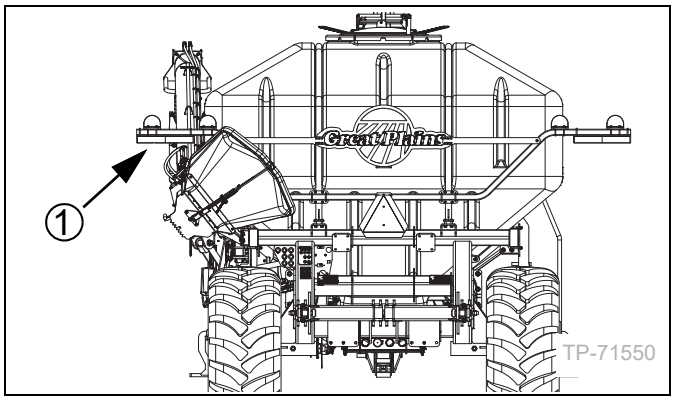

Transport Checklist

- ❑ Make sure the weight of the tractor equals or exceeds the value specified for your air drill assembly. Be sure to include markers and hopper contents if materials are pre-loaded.
- ❑ If the cart will be transported more than 15 miles, lock out drive chain to avoid wear. See "**Ground Drive Chain Lockout**" on page 20.
- ❑ Make sure the auger is secure in the front auger rest, rear carrier, and the rear transport lock is engaged before transporting.
- ❑ Make sure the auger flex hopper is an extended position and secured. See **"Extend Auger Flex Hopper"** on page 24.
- ❑ Make sure the auger hopper is tilted toward the machine and secured.
- ❑ Check that hopper lids are closed and secured.
- ❑ Check that both ladder lower sections are raised and pinned.
- ❑ Check that all implement transport locks are securely in place.
- ❑ Check that all tires are properly inflated as listed on **"Torque Values Chart"** on page 63.
- ❑ Check that no one is in the way before moving. Do not allow anyone to ride on the cart or implement.
- ❑ Always use tractor, cart, and implement warning lights when transporting the air drill.
- ❑ Know the maximum dimensions of the cart and implement in transport position and follow a route that provides adequate clearance from all obstructions, including overhead lines.
- ❑ Allow sufficient stopping distance and reduce speed prior to any turns or maneuvers. If the cart is transported full, allow extra stopping distance.
- ❑ Comply with all national, regional, and local laws when transporting on public roads.
- ❑ The hoppers obstruct a portion of your rear view. Be prepared for sudden maneuvers from following vehicles.

Parking

Follow these steps when parking the air cart for less than 36 hours. For longer periods, see **"Storage"** on page 32.

1. Place the cart on firm, level ground.
2. Check that hopper lids are latched, and secure the hopper lids with security cable or padlock and chain to prevent entry by children.
3. Remove jack from storage position and pin securely to lifting stob on outside of cart tongue.
4. If ground is soft place a wide block or plate under the jack to increase contact area.

5. Securely block cart tires to prevent rolling.
6. Extend jack until weight is off of the tractor drawbar.
7. Unhook electrical lines and install plugs as provided.
8. Release pressure on hydraulic system, then disconnect hydraulic lines and pull all lines back onto cart tongue. Be sure hose ends do not rest on the ground.
9. Disconnect the safety chain.
10. Unhitch from tractor.

Storage

If possible, leave the cart and drill connected for extended storage and store inside for a longer life. Store the cart and drill where children do not play.

1. Unload all material in hoppers.
2. Unlatch the hopper lids so that the seals are not compressed during storage. Secure the hopper lids with a security cable or padlock and chain to prevent unauthorized entry, and prevent high winds from opening the lid.
3. Empty the hoppers completely. Hand crank the meters several turns to empty completely. Blow out the meters with air to remove all material.
4. Unless cleaned out at last loading or during unload above, deploy the auger, and run the motor in reverse until auger is completely empty.
5. Return the auger to its rests with the auger hopper in the storage position. See **"Auger Storage"** below.
6. Remove the drive chains and store in oil.
7. Lubricate the cart at all points listed under **"Lubrication"** on page 48.
8. Check all bolts, pins, fittings, and hoses. Tighten, repair, or replace parts as needed.
9. Check all moving parts for wear or damage. Make note of any parts to be repaired before the next season.
10. Open the meter-box doors completely to release seal pressure and allow rinse water to exit.
11. Thoroughly wash the hoppers with a mild detergent inside and outside to prevent corrosion from fertilizer or seed treatments. Do not enter the hoppers.
12. Set doors slightly open, but not wide enough for animals to enter the meters. Wire doors in place if needed. Do not store the cart with seals compressed.
13. If the cart is disconnected from the implement for storage, plug all 2-1/2 inch openings to prevent pests from nesting.
14. Raise and stow the ladder extensions, to discourage climbers.
15. Use touch-up paint to cover scratches, chips and worn areas to prevent rust.

Auger Storage

If securing the auger for cart storage, position the auger flex hopper in an extended position. See **"Extend Auger Flex Hopper"** on page 24. The auger hopper will need to be tilted towards the machine and secured with lock pin. Ensure that all lock pins, latches, etc on the hopper assembly are securely engaged.

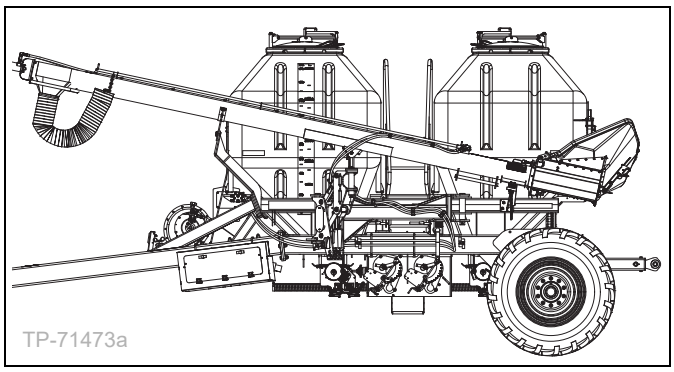

NOTICE

Equipment Damage Risk: *Be aware of the location of the outlet end of the auger during positioning. In addition to overhead line hazards, if a trailing implement is folded, the auger can strike it during positioning, with possible damage to the auger and/or implement.*

To position auger to storage position:

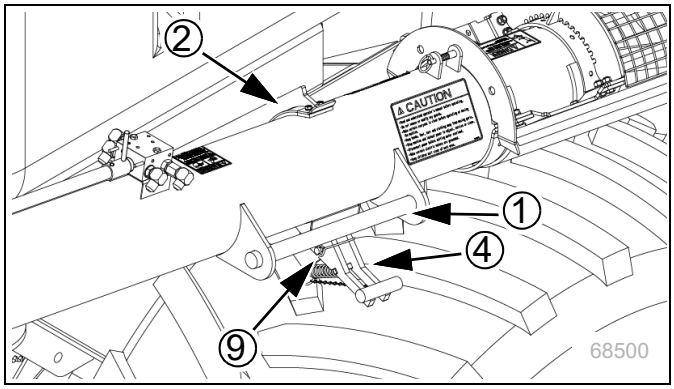

1. If necessary, unlatch locking pin (17).
2. Use the auger arm actuator to raise the swing arms (5) until fully extended. See “**Auger Arm Actuator**” on page 23. You may need to fold the auger swing arms.
3. Position the auger so that the auger hopper (12) is on the ground, approximately 8 feet away from machine, equally between the hoppers (18). Lift the auger and position so that the outlet end of the auger is easily accessible to release the auger discharge hose (14) from the ladder between the hopper bins.
4. From the ladder, use the snap link (16) attached to the chain (15) to secure the auger discharge hose (14) to the auger.
5. From the ground, pull the hopper latch pin (8) on the auger hopper (12).
6. Pivot auger hopper (12) by rotating auger hopper towards machine by 45 degrees.
7. Insert hopper latch pin (8).
8. Extend auger flex hopper. See “**Auger Flex Hopper**” on page 24.
9. Grasp the auger handle (1).
10. Position the auger into the auger carrier (2) and front auger rest (3).
11. Aligned the auger handle (1) and latch handle (10) to engage rear transport lock (4).
12. Insert lock pin (8) near rear transport lock (4).
13. Engage the locking pin (17) in the transport position.

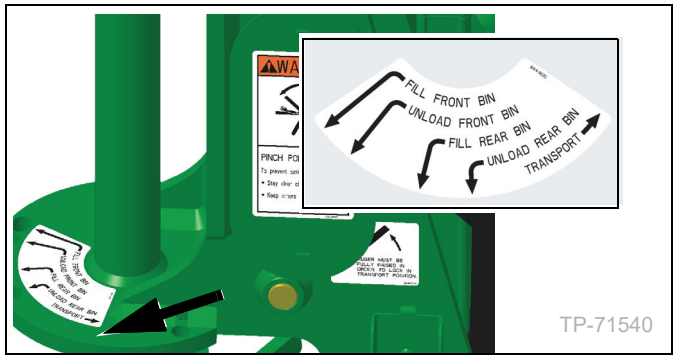

Adjustments

To get full performance from your air cart, you need an understanding of all component operations, and many provide adjustments for the best field results. Some of these have already been covered earlier in this manual.

Even if your planting conditions rarely change, some of these items need periodic adjustment due to normal wear.

Setting Material Rates

Meter Flutes

If your meter flutes have never been changed, you have standard meter flute shafts with 2-stars (four halves) per outlet. How many and what type of stars you have determines which rate chart to use.

If the configuration is not known, inspect the flute shaft from the hopper lid (if hopper empty), or from below the meter, with the calibration door fully open. It is not necessary to remove the shaft. Inspect the flutes and filler rings (3) at active outlets.

On a standard 2-star shaft, each seed drop outlet contains two standard flute sets (1), each pair staggered slightly from the next. Unused outlets are fully blocked by filler rings (4).

If the target material rate is too high or too low for the standard meter flutes, you may need to use an optional flute shaft in the meter.

On a 3-star shaft, each outlet contains three flute sets. Metering rates are approximately 150% of standard rates.

On a 4-star shaft, each outlet contains four flute sets, with no fillers between adjacent drops. Metering rates are approximately 200% of standard rates.

On a small seed shaft, each outlet contains one set of shallow flutes (2). Metering rates vary between 20% and 50% of the standard rates if the seeds are physically compatible with the small seeds flute pockets.

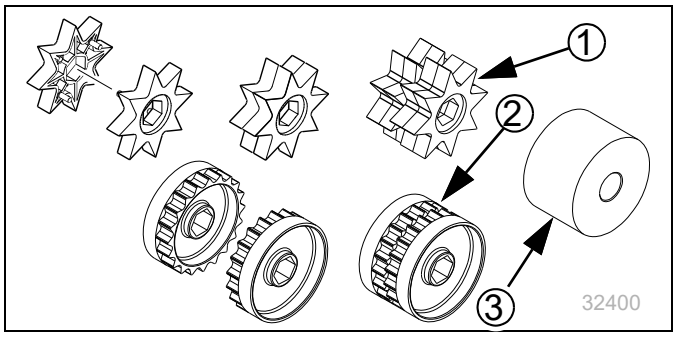

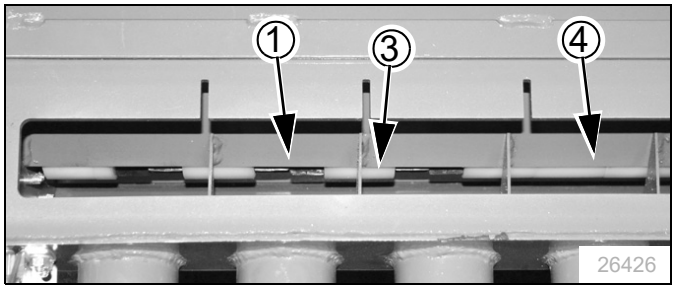

Changing Meter Flutes

To install a set of flute shafts (or re-install the standard shafts), start with the front meter. Save all parts for immediate or future re-use.

The hopper must be empty for this procedure. See “**Unloading Material**” on page 27.

1. On the right end of the meter box, remove and save the lynch pins (1) from the final range gears (2), and then remove and save the gears.

   Note which size gear was on the agitator output and flute input shaft.

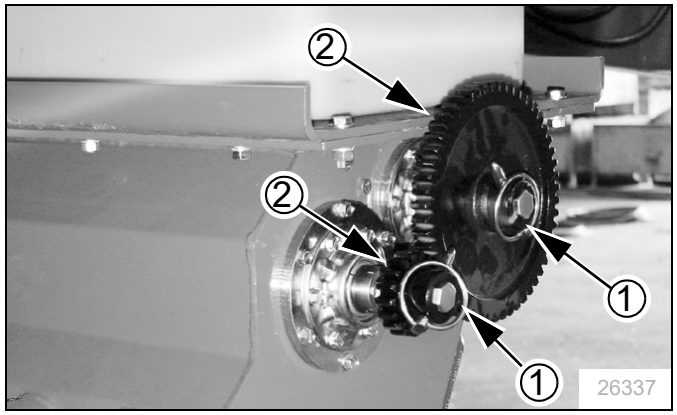

2. Remove and save the outer ring of six self-tapping hex head bolts (3), that secure the outer flange to the meter box.

   Do not remove the six bolts (4) that secure the bearing flangette to the outer flange. The shaft to be installed includes its own flange.

3. Carefully pull out the current flute shaft.

   For the rear meter box it may not be possible to pull the shaft straight out, as the tire may be in the way. When the right end of the shaft is close to the tire, angle the shaft forward to clear the tire.

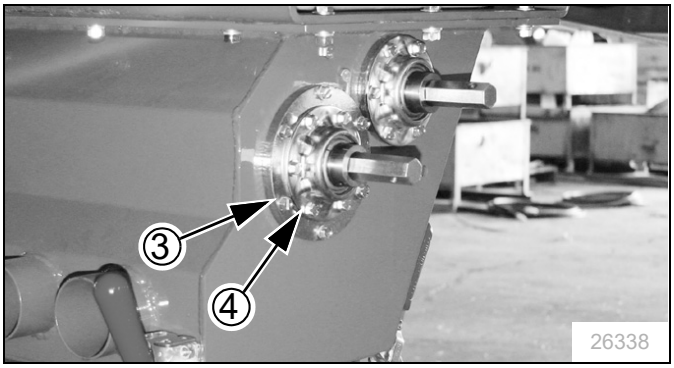

NOTE:
This illustration shows meter box off and various components removed for clarity. It is not necessary to dismount or further disassemble meters to change flute shafts.

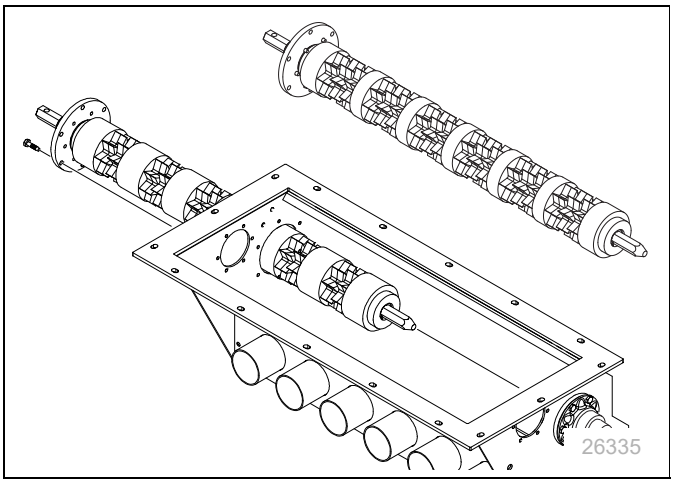

4. Store the old shaft in the carton in which the new shaft was supplied. Mark the carton with the number of active hoses (towers) and the number of stars. This will reduce the risk of mistaking the carton/ contents in the future.
5. Carefully insert the new shaft in the meter box.
6. When the flange on the right end is fully seated against the box, secure it with the six saved bolts. Give the shaft a few turns.
7. Re-mount the gears.
8. Note the pin hole orientation on the shaft and on the gears. The gears can only be pinned in two of the six possible ways they can be placed on the shafts.

Ground Drive Variable Rate Gearbox

The variable rate gearbox allows an infinitely variable meter drive speed to attain a wide range of metering rates. The ratio of gearbox input speed to output speed is controlled by the position of a gearbox control arm. The control arm has an indicator that points to a scale marked in degrees.

To adjust the variable rate gearbox for each hopper:

1. Remove the cotter pin securing the gearbox adjustment crank.
2. Rotate the crank (2) until the control arm indicator (3) points to the scale setting that matches the rate from the chart, or as determined by calibration.

NOTE:
Always go past the desired target rate then come back to the correct rate to ensure accurate settings.

3. Re-insert the cotter pin.

Refer to the Seed Rate Manual for further adjustments to achieve desired seeding rate.

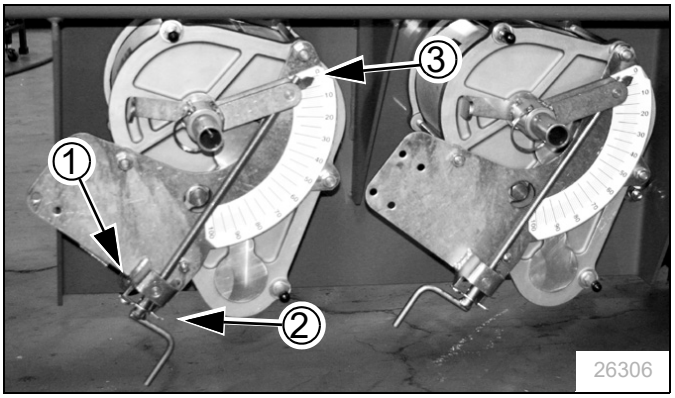

Meter Final Drive Range

The meter flute shaft (1) is driven by the agitator shaft (2) through a pair of interchangeable gears (3 and 4). The positioning of these gears creates two final drive ranges.

Each seed rate chart is based on a specific final drive range.

- High range - used for larger seeds and higher seeding rates
- Low range, - used for smaller seeds and lower seeding rates

The two seed meter shafts are DRIVING and DRIVEN.

- The DRIVING shaft is the upper forward shaft.
- The DRIVEN shaft is the lower rear shaft.

Refer to the rate charts and the table below to set the meter final drive range.

To change the final drive gears:

1. Remove the lynch pins (5) from the ends of both shafts.
2. Remove and position the gears as shown in this table.

RANGE	DRIVING	DRIVEN
LOW RANGE	17 Tooth Small	54 Tooth Large
HIGH RANGE	54 Tooth Large	17 Tooth Small

3. Secure with lynch pins.

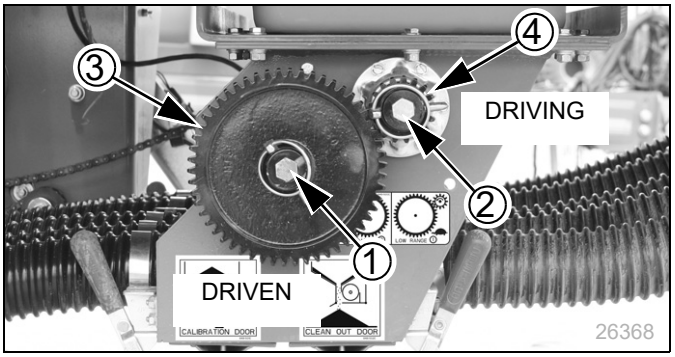

Figure 5Low Final Drive Range

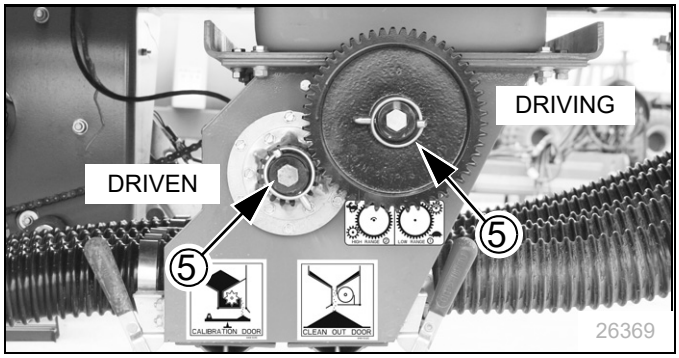

Figure 5High Final Drive Range

Fan Speed Adjustment

Fan speed (rpm) is available on the monitor. Have the monitor powered up for fan adjustments.

Fan shut-off valve must be open for fan to operate.

Hydraulic Fan Start-Up

With the fan shut-off valve open, and the tractor at a low idle speed, energize tractor hydraulics for fan. Lock hydraulic lever in place for continuous operation. Refer to your tractor operator's manual for instructions on operating hydraulic motor.

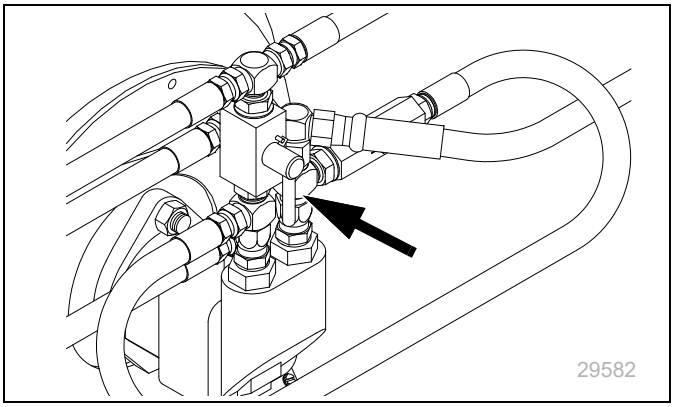

NOTICE

Fan Damage Risk:

Always engage the fan with the tractor at a low engine speed. Engaging the fan when the tractor is at high speed may cause fan damage.

Check that the bottom of the fan rotor rotates toward the fan outlet port. If not, reverse the direction of the hydraulic flow from the tractor.

Run fan for at least 15 minutes before seeding. Hydraulic fluid must be warm before fan and wing down pressure will operate properly.

1. Check bin-lid and meter-box seals for air leaks. Adjust the latch or replace the seals to prevent leakage.

NOTE:
It only takes a very small air leak to cause large variations in the seeding rate and pattern.

2. Watch the monitor and adjust the fan speed by increasing or decreasing hydraulic flow from the tractor. Use the following guidelines and the fan speed chart to properly adjust fan speed.
   - Higher fan speeds improve seed distribution, but high fan speeds also increase the chance of seed damage and bounce.
   - At first, adjust fan speed to the high end of the range suggested in the chart at right. Watch for excessive seed cracking and seed bounce from the furrow, then reduce fan speed if necessary.
   - Actual fan speeds will vary with implement width, row spacing, seeding rates, seed weights and seed size. Increase fan speed for heavier seeding rates or seed. Reduce fan speed for lighter seeding rates and seed more prone to cracking.

Recommended Fan Speeds

Seeds	Fan RPM
Sunflowers	2,250 to 3,000
Wheat	3,250 to 4,000

Seeds	Fan RPM
Soybeans	2,750 to 3,500
Milo	3,250 to 4,000

Hydraulic Drive Material Rate Calibration

Calibration is essential for accurate application. You should perform calibration when using the drill for the first time, at the beginning of each season, or when changing material, meter gearing, or metering roller.

For detailed information, see your DrillCommand guide.

Detailed Material Rate information begins on page 58.

CAUTION

Blowing Debris and Inhalation Hazards:
Wear eye protection and dust mask or respirator to minimize risk of exposure of hazardous chemicals.

DrillCommand versions 02.03.07.04 - 02.03.11.00

1. In DrillCommand, go to *Meter Settings* and select the field underneath *Target Rate*. Enter the desired rate, then tap to begin the corresponding hopper's calibration routine..

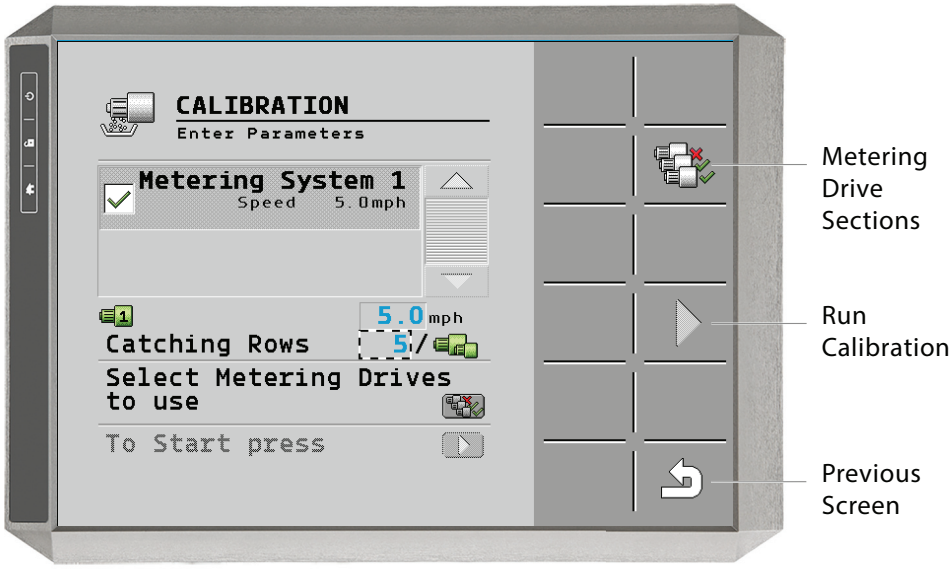

2. If using hydraulic motors, make sure that hydraulic flow to the motors is on. Enter your desired travel speed. Select your desired metering drive section by selecting the key. This selection will be the only section calibrated. Calibrate all sections before planting.

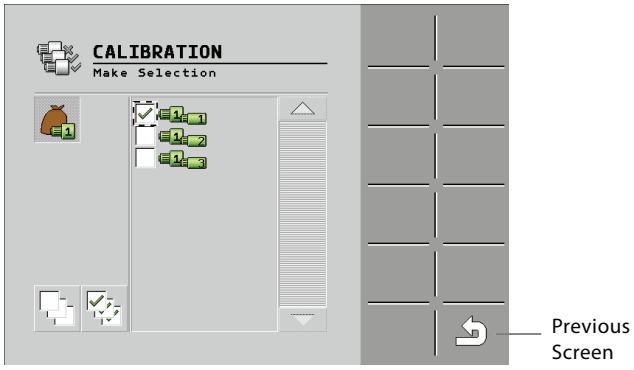

3. Tap to run the calibration. If the calibration is in the process of running, you should see the following calibration running screen:

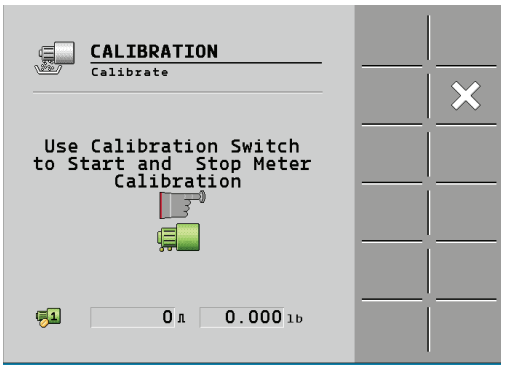

4. Once the terminal is on the calibration running screen, go to the machine and locate the calibration bag and scale. Mount the calibration bag to the machine's calibration port. Locate the calibration button. Engage this button to begin metering and catching the product. Release the calibration button when a reasonable sample has been collected. Unmount the bag from the machine and weigh it.
5. Go back to the terminal. Once the calibration button is released on the machine, you should have a new screen appear on the terminal.
6. Enter the weight of the sample in the box that appears after the calibration button is released. After this weight is entered, a speed range will appear at the bottom of the screen. If this speed range fully encompasses your desired travel speed, tap to confirm your calibration settings. If the results are not what you need and/or you don't want to use the results, tap to cancel the settings and start a new calibration run. A confirmation screen will appear to accept the cancellation.

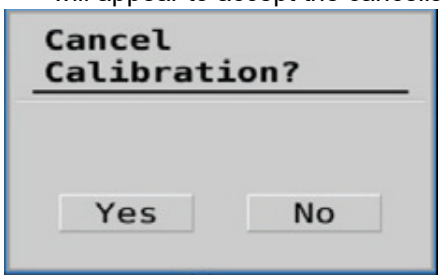

NOTE: If the speed range is too low or high, consider changing the gear range as described in the operator manual. After any change, another calibration routine must be performed.

DrillCommand versions 01.00.00.52 - 02.03.05.05

1. In DrillCommand, go to *Meter Settings* and select the field underneath *Target Rate*. Enter the desired rate, then tap to begin the corresponding hopper's calibration routine.
2. Enter your desired travel speed. Tap to run one test revolution. Tap start then exit the tractor cab and locate the calibration bag and scale and remove from the drill.

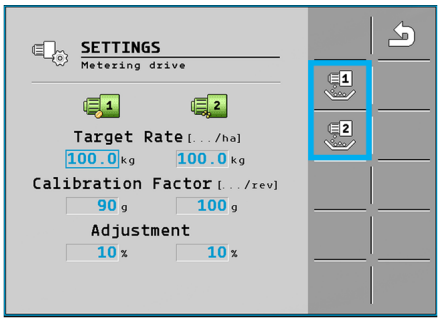

68333A

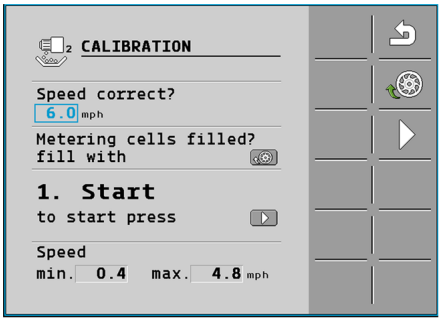

68334

3. Hang the scale on the hook provided. Hang an empty bucket onto the scale and zero the scale. Attach or slide the calibration bag underneath the meter being tested.
4. Press and hold the red test button until a reasonable sample has been collected. Remove the calibration bag from underneath the meter, pour contents into bucket and weigh. Make a record of the weight.
5. Once the calibration button is released, a calibration confirmation screen will appear. Enter calibration weight. Then, if the speed range fully encompasses your desired travel speed, tap to confirm your calibration settings. If the results are not what you need and/or you do not want to enter the values manually, tap to cancel the settings and start a new calibration run.

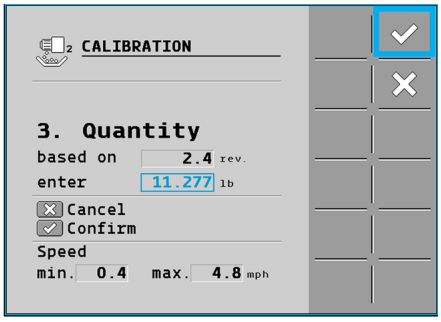

68335A

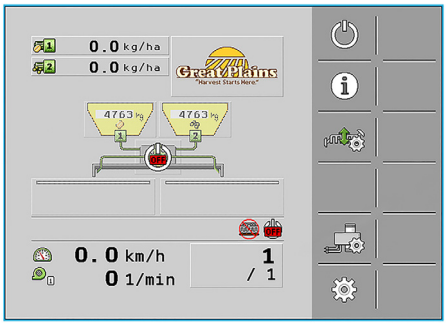

68336

6. Once calibration is complete, return to the home screen by using the icon. When you are on the home screen, lower the drill's hydraulics and turn on the fan. Ensure that the hopper lid is closed. Then tap to turn on the drill.

Additional consecutive calibration operations may improve accuracy.

Implement Lift Switch Adjustment

Lift Switch Location

The lift switch is a proximity type switch. The lift switch turns seed metering on and off as the implement is lowered and raised. The lift switch is actuated by a component moving across the face of the lift switch. See chart for locations of the lift switches.

To adjust the height at which the seed metering is turned on, do the following.

Drill Model	Lift Switch Location
CTA4000/HD	Lift arm, mainframe front
CTA4500/HD	Lift arm, mainframe front
NTA3010 & NTA3510	Right rear parallel lift arms
3N-4010HDA	Right rear parallel lift arms
FCA4500	Rear center, center frame

DANGER

Crushing Hazard:

Do not place any part of body under implement while making adjustments.

1. Park the tractor, implement, and, if equipped, the seed cart on a solid, level surface.
2. Unfold the drill.
3. Lower the implement to the height where seeding should start (usually just above ground). Raise the openers an additional 1/2 in (12 mm). Set the lift circuit to neutral.

NOTE:
Do not set the lift switch to come on too low. The openers can ride up and down over irregular ground and an early switch can result in patches of no seeding.

4. Stop the tractor engine and apply the tractor parking brake. Turn the key to the ON position to provide power to the lift switch.

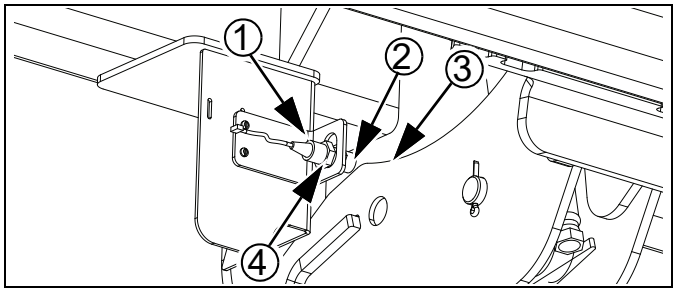

Figure 6CTA Lift Switch

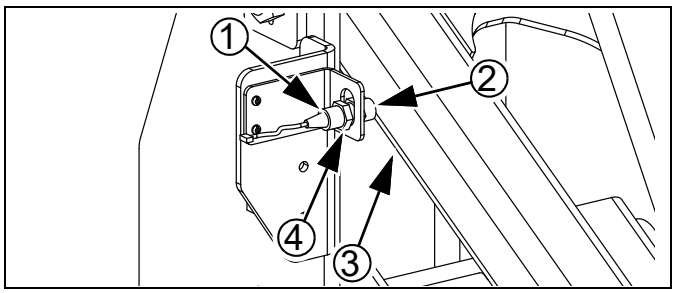

Figure 7NTA and 3N Lift Switch

DANGER

Have another person set in the tractor seat during the adjustment procedure. Have the person make sure the hydraulics are not engaged and the tractor is not started during the adjustment procedure.

5. Locate the lift switch (1). Check the distance between the face (2) of the lift switch and the component (3) that moves across the face. The distance must be $^{5}/_{16}$ in (8 mm) or less. If the distance is not correct, adjust the nuts on the lift switch as necessary.
6. Loosen the outer nut (4) on the lift switch just enough so the lift switch can move in the adjustment slot.
7. Slide the lift switch up or down in the slot until the yellow lamp in lift switch goes from off to on.
8. Tighten the outer nut on the lift switch without moving the lift switch.
9. Start the tractor engine and lower the implement all the way.
10. Stop the tractor engine. Remove the key and take the key with you.

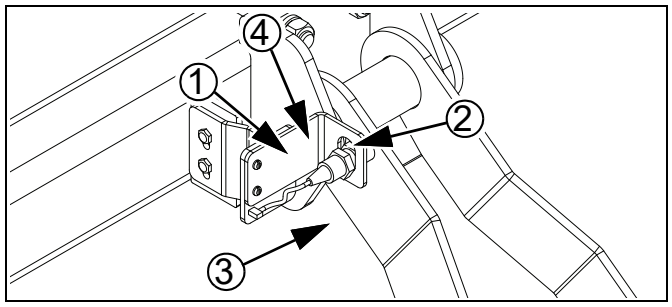

Figure 8FCA4500 Lift Switch

📖 **NOTE:**
If adjustments are made to hydraulic coulter depth, check lift switch adjustment.

Clutch Lock-Up

In the event of a mechanical or electrical failure of the clutch of its controlling circuit, the clutch may be mechanically locked in the engaged mode, using three bolts stored near the hand crank.

This allows finishing a planting session when repair or replacement cannot be done immediately.

When locked up, meters will continue supplying seed even with the drill raised. For short moves without seeding, set variable rate gearboxes to 0. For longer moves, remove lock-up bolts or remove chains.

1. Remove the three M8-1.25 x 14mm metric bolts (3) from their storage locations near the clutch. Save the nuts.
2. At the clutch, align the cutouts (1) with the holes (2).
3. Insert the bolts (3).

If you only see part of the hole or the entire hole is obstructed by a metal disc (4), you are not at a cutout.

When at a cutout, the bolt will screw in with minimal resistance until the bolt head reaches the clutch face.

NOTICE

Clutch Damage Risk:
Use only the provided 14 mm length bolts. Longer bolts will damage the clutch. Shorter bolts may not effect a lock-up. Replacement bolts are Great Plains part number 802-782C.

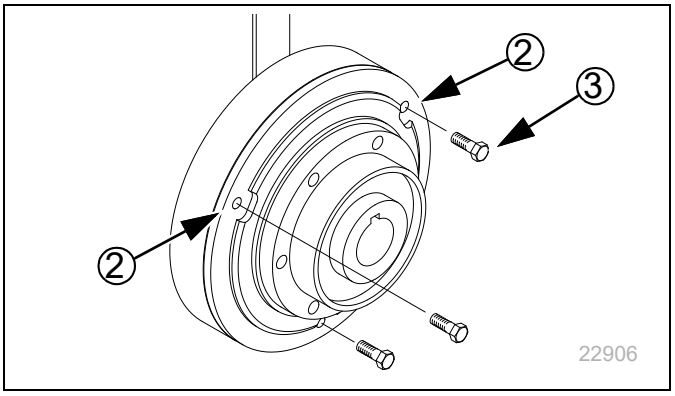

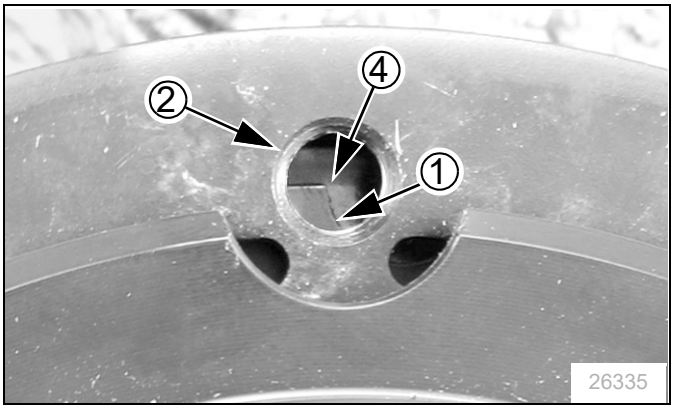

Figure 9Clutch Plate Nearly at Cutout

Troubleshooting

This chart primarily covers problems arising from air cart issues, although it does include a few drill items. Also, consult the Troubleshooting chart for the drill implement.

Problem	Cause	Solution
Planting too little	Air leaks	Check hopper lids, meter seals, manifold caps and seed hose connections. Adjust latch and/or replace seals as needed.
	Fan speed too low	See "**Recommended Fan Speeds**" on page 37.
	Fan will not run fast enough.	Tractor must be able to supply 18 gallons/minute at 200 psi.
		Check that hydraulic fan check valve is not installed backward.
	Hydraulic fan running in reverse	Check hydraulic circuit flow direction.
	Height switch operating too low - clutch is disengaging with openers in ground	See "**Implement Lift Switch Adjustment**" on page 40.
	Incorrect meter setting	Re-check against rate charts.
		Verify calibration.
	Incorrect cart setup sprockets for implement	See "**Cart Sprocket Setup**" on page 13.
	Excessive field speed	Reduce speed
	Incorrect tire size or air pressure	Check tire size and air pressure, see "**Torque Values Chart**" on page 63.
	Seed size and weight vary from chart	Calibrate. Adjust rate to compensate.
	Excessive gaps between drill passes	Adjust implement markers.
	Low seed level in seed box	Fill seed box.
	Actual field size is different	Verify field size.
	Plugged seed hose	Clean out seed tube hose.
		Remove excess slack in hoses.
		Re-route hoses to avoid sharp bends.
		Check that metering is actually stopping when drill is raised. Adjust or replace height switch.
	Plugged opener seed tube	Lift up drill, expose bottom of seed tube and clean out.
	Meter sprocket damaged	Replace seed cup sprocket.
	Obstruction in meter or seed tubes (foreign material or uncleaned seed)	Clean meter and seed tube.
	Clutch slippage due to oil in clutch	Disassemble and de-grease clutch. On an emergency basis, use the clutch lock-up procedure on page 40.
	Removed, thrown or worn chains	Check drive chains.

Problem	Cause	Solution
Planting too much	Meter setting too high	Re-check against chart & calibration.
	Incorrect cart setup sprockets for implement	See “**Cart Sprocket Setup**” on page 13.
	Seed size and weight vary from chart	Calibrate. Adjust rate to compensate.
	Actual field size is different	Verify field size.
	Excessive overlap or irregular shaped field	Adjust implement marker.
	Incorrect tire size or air pressure	Check tire size and air pressure, see “**Torque Values Chart**” on page 63.
	Meter sprocket damaged	Replace if damaged.
No Seed Flow	Monitor master switch off	Engage monitor.
	Height switch out of adjustment or failed.	Check, adjust or replace height switch.
	Chain broken or removed	Inventory chains against routing diagrams.
	Clutch failed	Replace clutch. On an emergency basis, use the clutch lock-up procedure on page 40.
	Clutch circuit failed	Replace failed component or cable. On an emergency basis, use the clutch lock-up procedure on page 40.
	Variable rate gearbox set to zero	Check variable rate gearbox.
	Sprocket loose on shaft	Check all sprocket pins, keys and set screws.
	Meter box completely plugged	Have Parts Manual at hand for parts identification. Remove chain drive to meter. Remove bolts holding meter box to bottom of hopper. Remove and clean out meter.
Uneven seed spacing	Excessive field speed	Reduce speed.
	Unclean seed	Use clean seed.
	Air leaks	Check hopper lids, meter seals, manifold caps and seed hose connections. Adjust latch and/or replace seals as needed.
	Erratic meter clutch	Check for damaged cables and loose connections.
	Build up of seed treatment in meter.	Clean out meter.
	Tower blockage	Check towers for obstructions and plugging. Blockages sometimes move from port to port in towers.
	Seed hose plugged	Stop and raise drill with fan running. Hand-crank meter and check for rows not delivering seed.
	Meter wheel damaged or worn	Check meter sprocket and replace.
Uneven seed depth	Excessive field speed	Slow down.
	Air cart not level	Check leveling instructions, page 13.
	Planting conditions too wet	Wait until drier weather.
Excessive seed cracking	Excessive field speed	Slow down.
	Fan speed too high	Check fan speed against recommendations on page 36.
	Dividers missing or damaged in towers	Check and replace as needed,
	Unclean seed	Use clean seed.
	Damaged, old or dry seed	Use clean, new seed.
Chain	Debris in retainer clip	Be sure open end of retainer clips are facing opposite direction of chain travel. Consult chain routing diagrams in **“Appendix A - Reference Information”** on page 55.

Maintenance

Proper servicing and maintenance is the key to long implement life. With careful and systematic inspection, you can avoid costly maintenance, downtime, and repair.

Always turn off and remove the tractor key before making any adjustments or performing any maintenance.

WARNING

Crushing Hazard:
You may be severely injured or killed by being crushed under a falling implement. Always have frame sufficiently blocked up when working on, and particularly under implement.

WARNING

High Pressure Fluid Hazard:
Escaping fluid under pressure can have sufficient pressure to penetrate the skin. Check all hydraulic lines and fittings before applying pressure. Fluid escaping from a very small hole can be almost invisible. Use paper or cardboard, not body parts, and wear heavy gloves to check for suspected leaks. If injured, seek immediate medical attention from a health care provider familiar with this type of injury.

Regular Maintenance

- ❑ After using the cart for several hours, check all bolts to be sure they are tight.
- ❑ Lubricate areas listed under **"Lubrication"** on page 48.
- ❑ Adjust idlers to remove excess slack from chains. Clean and use chain lube on all roller chains as needed.
- ❑ Check for air leaks at lids, doors, seals, caps and hose connections.
- ❑ Inflate tires as specified on **"Torque Values Chart"** on page 63.
- ❑ Replace any worn, damaged or illegible safety decals.

Ground Drive Chain Maintenance

Initially check the drive chains after the first 10 hours of drill use. After that, check the chains every 100 hours.

Lubricate chains any time there is a chance of moisture, and when being stored at the end of the planting season.

Hub Chain

The hub chain (1) connects the hub sprocket weldment to a sprocket on the main drive shaft (2) at the left cart wheel.

Check chain tension. Chain should have 1/8 inch (3 mm) slack. To adjust, loosen the bolts (3) holding the main-shaft bearings and slide the main shaft. Tighten bolts.

If you make any adjustments to the hub chain, check tension on the chain from main shaft to clutch shaft.

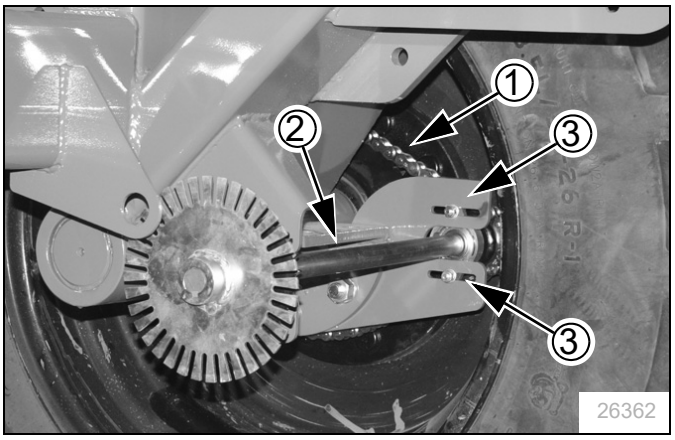

Material Clean-Outs

To keep your machine in good condition, regularly clean out hoppers and air system when needed. Empty hoppers of material before cleaning machine. Once hoppers are empty, find a suitable place to park.

NOTICE

Equipment Damage:

To prevent equipment damage, prior to cleaning the machine, remove metering shafts and set aside. Return star shaft once cleaning is completed.

1. Remove and clean strainer (page 18). While strainer is removed, inspect hopper for signs of problems that may prevent normal clean-out, such as objects or congealed masses too large to exit through meter.
2. Open both calibration and clean-out doors on the meter of the hopper to be cleaned out.
3. Power wash the interior of the hopper while a second person cranks the meters.
4. Re-install strainer. Close lid tight and secure handle.
5. After cleaning out the last hopper, close all doors. Run air system for 10 minutes to blow moisture out of meters and lines. Open both front hopper meter doors. Run air for 5 minutes. Leave front meter doors open. Open rear hopper meter doors. Run air for 5 minutes.
6. Shut off air. Clean door seals and meter box faces then close meter doors. Move drill to storage area.

Problem Clean-Outs

If material fails to pass through the clean-out door, remove the hopper strainer and evaluate the problem. You may need to force the material out with either a long pole or wash-out.

- If the problem is a single movable large object, fishing out from above is a possible solution.
- If the problem is congealed materials, scoop out a sample from above and see if the mass dissolves in water. If so, and there is a small amount of the material involved, rinsing, or rinsing and pumping the hopper from above is the best solution.
- For small amounts of residual materials, prodding with a long pole may push it through the clean-out door.

Hopper Entry

Normal use of the hopper and routine maintenance do not require entry. The hopper vent tube structure includes features to aid emergency egress. It is not intended for routine entry. However, do not remove the vent tube structure, as it is required for pressure-balancing the space above the material.

Before entering a hopper for hopper level, pressure sensor replacement, or difficult clean-out, you should review the chemical safety information. Only enter a hopper with at least one trained and equipped attendant present. Do not enter a hopper for routine maintenance, unloading, or cleaning.

DANGER

Rapid Suffocation Hazard:

Any hollow spaces are highly likely to have insufficient oxygen and/or toxic gases from microbial action. Falling through a crust in either case can result in death in a matter of seconds. Never enter a hopper to dislodge a crust or bridge.

Should a situation arise where hopper entry is necessary, observe the following precautions:

Evaluate the hazards

All persons involved should review and retain the material safety data sheets (MSDS) for any treatments and/or fertilizers used in the hopper since it was last thoroughly cleaned, and the most recent materials even if the hopper was subsequently cleaned.

Empty the hopper

Follow the steps at See “**Problem Clean-Outs**” on page 47. If a blockage makes this impossible, use an external pump line to remove as much material as possible without performing a hopper entry. Pump until at least some material is exiting the clean-out door. Leave the clean-out door open.

Clean the Hopper
From the outside at the walkboard, power-wash the inside of the hopper. Use a mild detergent sprayer. Rinse thoroughly. Allow hopper to air with lid and clean-out door open until moisture has evaporated.

Clutch Input Chain

The clutch input chain (1) connects a driving sprocket (2) on the main drive shaft (3) to a driven sprocket (4) on the clutch jackshaft (5) above the meter gearboxes.

Check that both driving and driven sprockets are aligned and that the chain is not skewed. If not aligned, loosen the set screws holding one or both drive sprockets in place and move them until they are aligned. Re-tighten the set screws.

Check chain tension. Lower span should have 1/2 inch (13 mm) slack at the midpoint. To tighten, loosen idler bolts (6) and adjust idlers. Do not adjust main shaft bolts (7) except to keep main shaft parallel to wheel spindle if significant adjustment was necessary on hub chain.

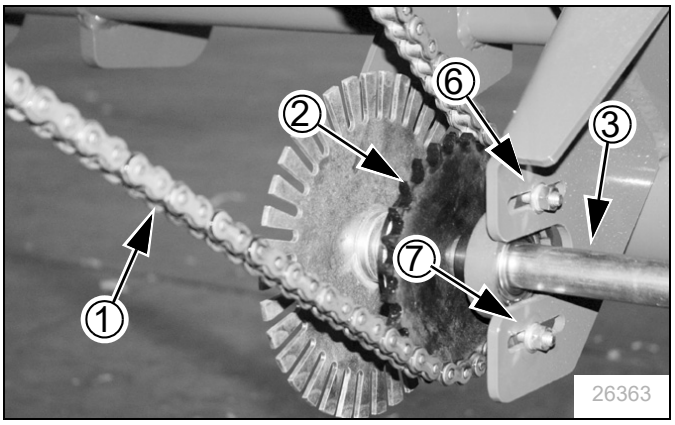

Figure 10Clutch Input Chain, Lower

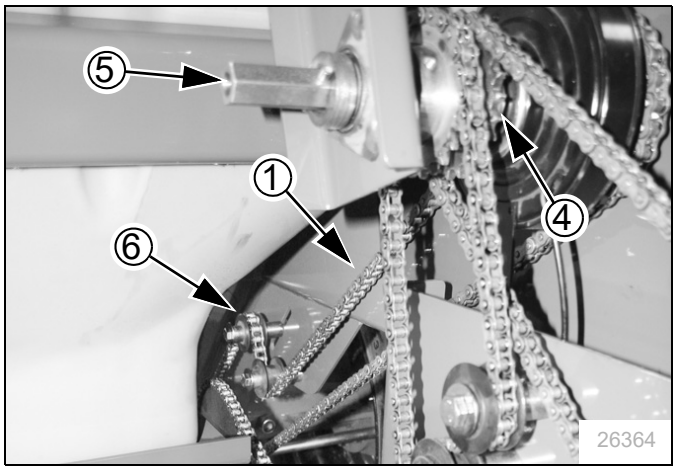

Figure 10Clutch Input Chain, Upper

Gearbox Input Chains

The gearbox input chains connect the clutch output to each of the two gearboxes.

Check chain tension. The rear spans should have 1/2 inch (13 mm) slack at the midpoint. To adjust, loosen the bolts holding the upper idlers (1) and move the idler. Tighten the bolts.

NOTE:
The gearbox output chains are tensioned by spring idlers and require no adjustment.

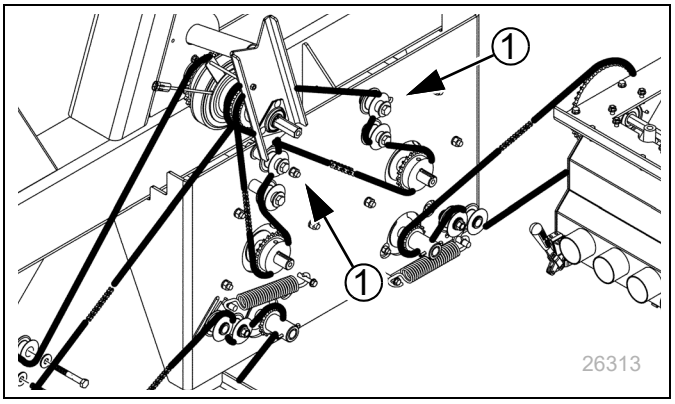

Hydraulic Drive Maintenance

Contamination is the most common cause of performance problems and premature wear in a hydraulic system. Make a special effort to properly clean quick couplers before attaching the hoses to the tractor.

All fluid is filtered through the high pressure filter, and it provides protection to the hydraulic components of the drive if properly maintained.

The high pressure filter is equipped with a pop-out indicator when the replaceable element is clogged, and should be changed immediately. Normal service life of the element will vary based on the precautions taken to minimize contamination at the couplers and route service of the tractor filtration.

To change the element:

1. Unscrew the lower canister from the filter, catching and disposing of the used fluid.
2. Remove and discard the element.
3. Install a new element.
4. Clean the canister threads and lube the O-ring with hydraulics fluid, then reinstall.

Problem Clean-Outs

For normal unloading of remaining materials after planting is done, see “**Unloading Material**” on page 27. If, however, parking and storage recommendations have not been followed, it is possible to have hard-to-remove material present.

If the material fails to pass through the clean-out door, take the following steps to remove it. Do not consider entering the hopper until first completing these tasks.

1. Open the clean-out door.
2. Remove the strainer and evaluate the problem. For example:
   - If the problem is a single movable large object, such as a dead animal, fishing out from above may be the solution.
   - If the problem is congealed materials, scoop out a sample from above and see if the mass dissolves in water. If so, and there is a small amount of the material involved, rinsing, or rinsing and pumping the hopper from above may be the solution.

For small amounts of residual materials, poking with a long pole may push it through the clean-out.

If poking does not produce satisfactory results, and you intend to try wash-out, at least poke one hole down to the clean-out, so that water can flow out.

If using the wash-out method, start by introducing a small amount of water, and make sure that it appears at the clean-out within 15 minutes. If not, you will just be adding water to the problem. The hopper is not designed to hold water at full capacity. Add no more water. Remove meter box instead, and clean out from below.

Removing Meter Box

Removing the meter box exposes 7x7 inch access holes through which stubborn material may be extracted.

1. Loosen the gearbox-to-meter chain idler and remove the chain.
2. Disconnect inlet and outlet hoses.
3. Disconnect or remove the seed rate sensor.
4. Loosen all the nuts (1) securing the meter box (2) to the hopper bottom plate (3). Unscrew the nuts to the bolt ends, but do not completely remove the nuts.

5. The meter box has a bead of silicone sealant between it and the bottom plate. Use a pry tool to free the meter box from the bottom plate.
6. Once hanging entirely on the loose bolts, remove the nuts and lower the meter box from the hopper.

When re-mounting the meter box, scrape off the old silicone sealant and replace it with fresh sealant.

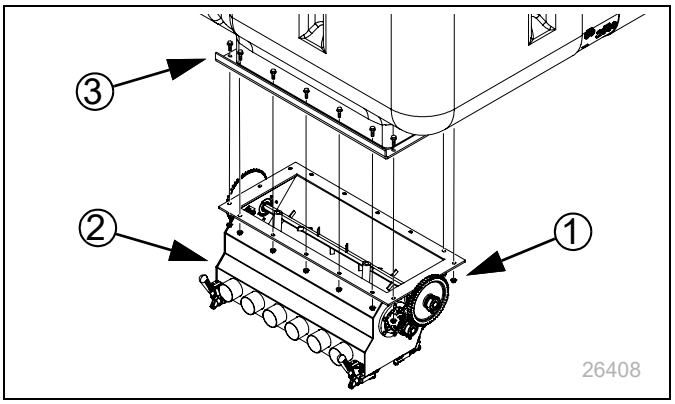

Hopper Entry

DANGER

Rapid Suffocation Hazard:
Encrusted grain may be loose and flowing beneath the crust. Any hollow spaces are highly likely to have insufficient oxygen and/or toxic gases from microbial action. Falling through a crust in either case can result in death in a matter of seconds. Never enter a hopper to dislodge a crust or bridge.

Normal use of the hopper and routine maintenance do not require entry. Ladders are provided in the hoppers, but they are for emergency exit, and are not intended for routine entry. However, do not remove the ladders, as they are also pressure-balancing vent lines.

Depending on their use, the material hoppers may be or become "*permit-required confined spaces*" under U.S. OSHA regulations (29 CFR 1910.146) and similar regulations, statutes, insurance agreements and local business policy. A written policy and permitting process may be required for any hopper entry.

Before entering a hopper for hopper level sensor replacement or difficult clean-out, review **"Handle Chemicals Properly"** on page 2. Only enter a hopper with at least one trained and equipped attendant present. Do not enter a hopper for routine maintenance, unloading, or cleaning.

Should a situation arise where hopper entry is necessary, observe the following precautions:

Evaluate the hazards
Review the material safety data sheets (MSDS) for any treatments and/or fertilizers used in the hopper since it was last thoroughly cleaned, and the most recent materials even if the hopper was subsequently cleaned.

Secure the cart
Block the cart wheels to prevent movement.

Break up crusting or bridging
From outside the hopper, break up any hard surfacing on top of the material, or forming layers within the material. Such layers are extremely dangerous to stand on.

Empty the hopper
If a blockage makes this impossible, use an external pump line to remove as much material as possible without performing a hopper entry. Pump until at least some material is exiting the clean-out door. Leave the clean-out door open.

Clean the hopper
From the outside at the walkboard, power-wash the inside of the hopper. Use a mild detergent sprayer. Rinse thoroughly.

Air the hopper
Leave the hopper lid and clean-out door open, and do not begin work until the rinse water has completely evaporated.

Lubrication

If any movable parts such as levers, pivots, and clamps are not moving smoothly due to rust or hindering material, do not attempt to force parts into motion. Instead, remove the rust or unwanted material and apply oil or grease on the relevant spot. Otherwise, machine may become damaged through impaired usage.

Apply a small amount of grease to the following areas after the amount of use indicated. If you operated the machine in extremely wet and/or muddy conditions, lubricate grease fittings more frequently.

Every 50 Hours Lubrication

■ **Hopper lid pivot bar and clamps**

1 pivot and 1 clamp each of 2 lids; 4 total

Type of lubrication - multi purpose spray lubricant
Quantity - coat thoroughly

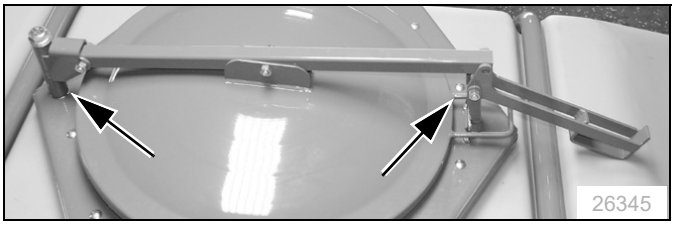

■ **Meter box door clamps**

2 clamps each of 4 doors; 8 total

Type of lubrication - multi purpose spray lubricant
Quantity - coat thoroughly

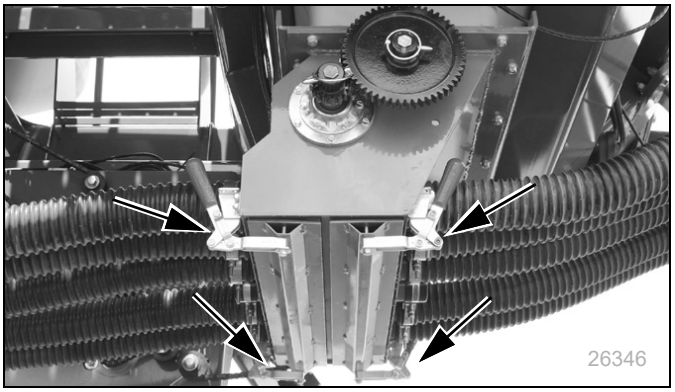

Lubricate Chains As Required - Ground Drive Only

Lubricate chains any time there is a chance of moisture, and when being stored at the end of the planting season

■ **Hub chain**

1 chain, inside left wheel

Type of lubrication - chain lube
Quantity - coat thoroughly

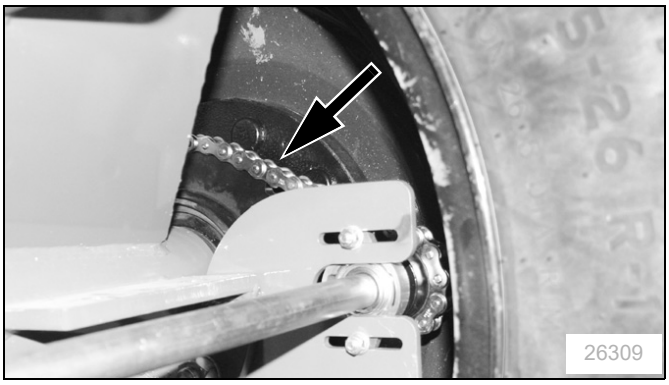

■ **Driveshaft output/clutch input chain**

1 chain, from left wheel to clutch

Type of lubrication - chain lube
Quantity - coat thoroughly

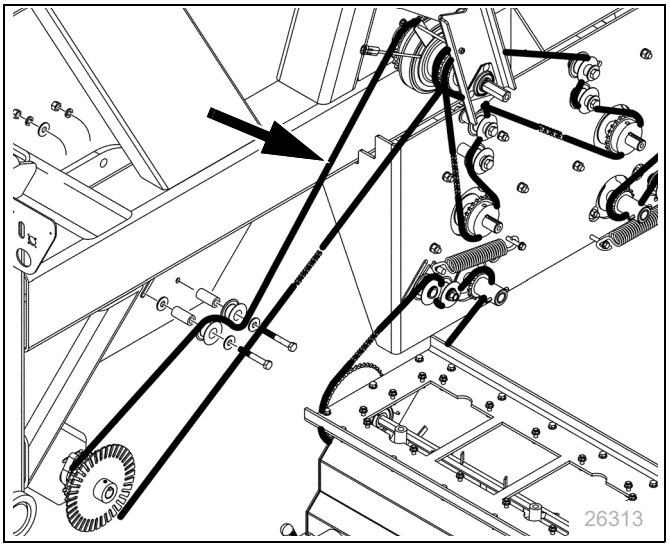

■ **Clutch output/gearbox input chains**

1 chain each gearbox; 2 total

Type of lubrication - chain lube
Quantity - coat thoroughly

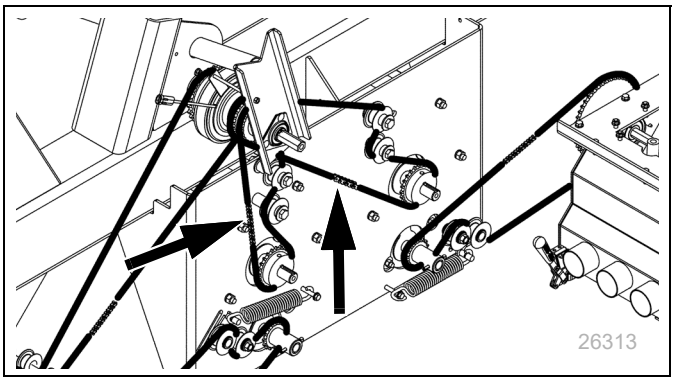

■ **Gearbox output/meter input chains**

One chain each meter; 2 total

Type of Lubrication - chain lube
Quantity - coat thoroughly

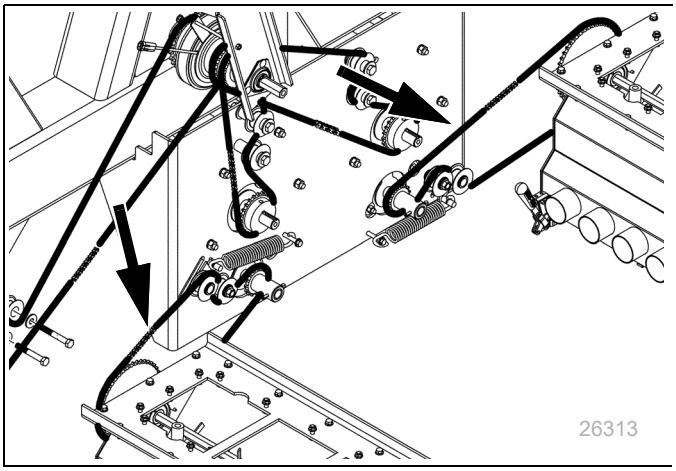

Seasonal Lubrication

■ Gearbox oil - ground drive only

1 port per gearbox; 2 total

Type of lubrication - high quality SAE 5W-30 oil
Quantity - 6.5 pints (3.1 liters)

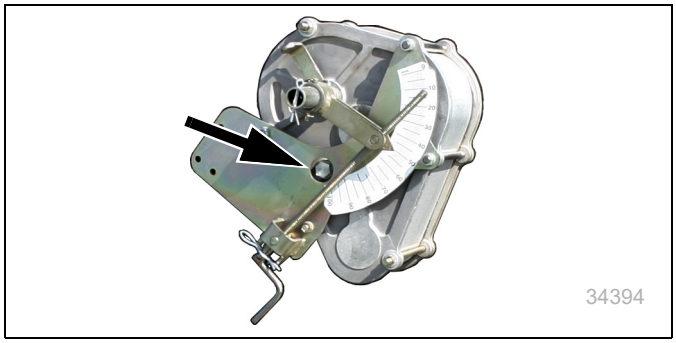

■ Main Wheel Bearings

2 bearings each wheel; 4 total

Type of lubrication - grease
Quantity - repack

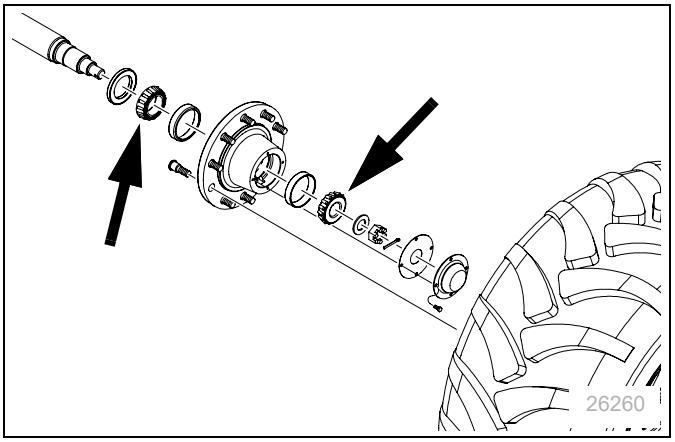

Options

Blockage Detector

The seed monitor supports sensors that monitor for plugging in the one-inch, secondary hoses. The package includes programmable blockage modules for each tower and flow sensors for each secondary seed hose. The blockage modules signal the monitor when flow stops at a sensor. The monitor then sounds an alarm and identifies the problem hose.

To order blockage sensors, contact your Great Plains dealer.

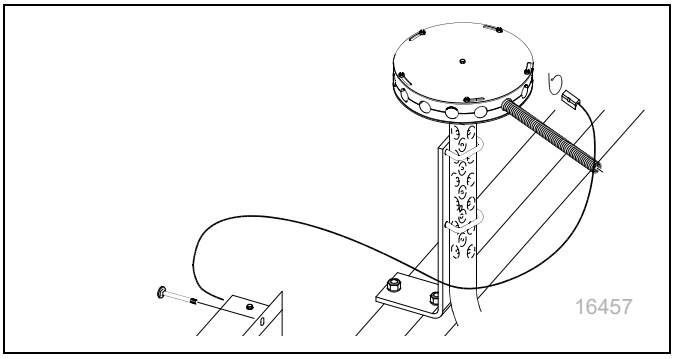

Implement, Row Spacing	Part Numbers
CTA4000/HD-5010, 10 inch	168-705A
CTA4000/HD-6575, 7.5 inch	168-704A
CTA4000/HD-8006, 6 inch	168-703A
CTA4500/HD-7275, 10 inch	160-411A
CTA4500/HD-7275, 7.5 inch	160-420A
CTA4500/HD-9006, 6 inch	160-421A
FCA4500-5410, 10 inch	574-003A
FCA4500-7275, 7.5 inch	574-002A
NTA3010-3610, 10 inch	168-700A
NTA3010-4875, 7.5 inch	168-699A
NTA3510-4010, 10 inch	168-702A
NTA3510-5575, 7.5 inch	168-701A

Hitches

One hitch is selected upon initial order, and includes the spring wire loop, safety chain, and all fasteners. Additional hitches may be ordered for conversion in the field, and include extra hitch mounting bolts, lock washers, and nuts.

Ref	Hitch Description	Part Numbers
(1)	Small Clevis	170-039A
(2)	Small Strap	170-059A
(3)	Large Strap, Welded	170-038A
(4)	Large Strap, Cast	170-004A
(5)	Category V, Cast	170-073A
(6)	Category III / IV Swivel	194-523A
(7)	Category V Swivel	194-524A
(8)	Drop Hitch Bundle (FCA only)	176-029K

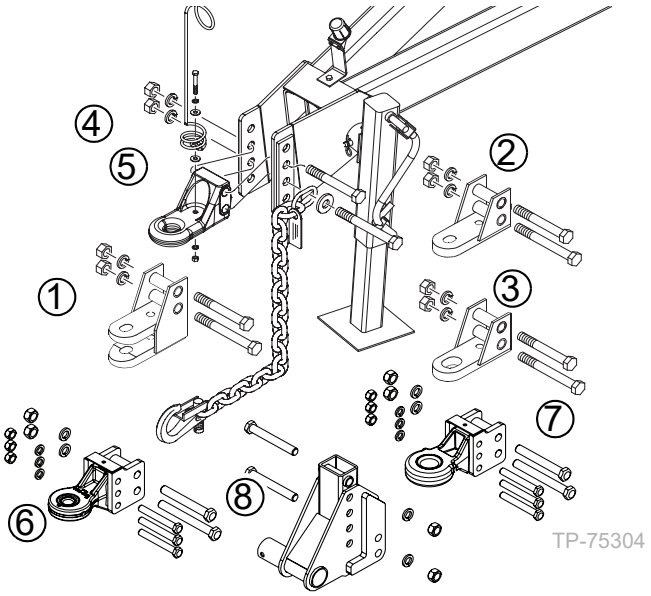

Alternate Flute Sets

The standard model carts have two fluted wheels (stars) and two filler rings in each active meter compartment.

Alternate flute shafts are available for higher rates and for small seeds. These accessories replace the existing 2-star shaft assembly (4) with one having a different star configuration. This provides different seeding rates for the same range and variable rate gearbox setting.

- Replacing the standard 2-star shaft with a 3-star shaft (1) increases the seeding rate by approximately 150% of standard rate.
- Replacing the standard 2-star shaft with a 4-star shaft (2) increases the seeding rate by approximately 200% of standard rate.

For small seeds (see list at right) or other seeds substantially smaller than 1/2 x 3/16 inch (12 x 4.7 mm), the standard shaft may not provide sufficient precision and uniform flow at very low rates. A small seeds flute shaft (3) that provides two half-width shallow flute stars per compartment is available.

- For compatible seeds, replacing the standard 2-star shaft with the small seeds shaft (3) reduces the seeding rate by approximately 80% (to 20% of standard rate).

The kit required depends on the number of towers on the implement and the number of stars desired. Order one kit per meter (two per air cart).

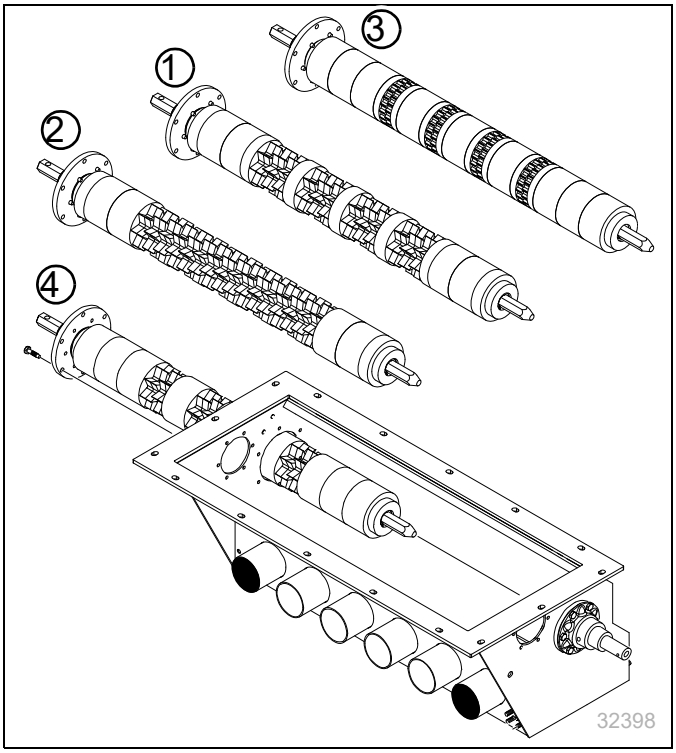

Part Numbers for Meter Boxes and Meter Shafts

Implement	Towers	Two Star	Three Star	Small Seeds	Meter Box
NTA3010	4	168-400S	168-402S	168-753S	168-413K
NTA3510	5	168-384S	168-386S	168-752S	168-059K
CTA4000	5	168-384S	168-386S	168-752S	168-059K
CTA4500	6	168-360S	168-383S	168-590S	168-430K
FCA4500	6	168-360S	168-383S	168-590S	168-430K
FCA4500	6	168-360S	168-383S	168-590S	168-430K

Topcon Console System

Topcon console systems provides powerful functionality for precision machine control. Your console will come configured with software for machine control. Refer to the Topcon console operator manual for installation instructions.

Description	Part Number
XD-Plus Console Kit	194-468A
XD Console Kit	194-467A
GPS Receiver and Mount*	194-472S
ISOBUS Analog Camera**	411-861A
Adapter Harness for XD-Plus/XD***	843-411C

* GPS is customer-provisioned.

** Up to three cameras may be used with XD-Plus console. One camera may be used with XD console.

*** One adapter harness is required for each Camera.

For online resources and manuals, create an account at https://mytopconnow.topconpositioning.com and search for XD/XD+ in the search bar.

Appendix A - Reference Information

Specifications and Capacities

Model	ADC2352
Tractor Requirements	with CTA4000HD - 325 hp with CTA4000 - 300 hp with FCA4500 - 350 to 400 hp with NTA3510 - 275 hp with NTA3010 - 250 hp
Hopper Capacity	175 bushels
Seeding Rates (each meter)	1.5 to 320 lbs/acre (1.7 to 359 kg/ha)
Weight (empty)	8100 lbs (3674 kg)
Weight (full)	32 100 lbs (14,560 kg)
Hitch Load	9500 lbs (4309 kg)
Hydraulic Circuits	3 circuits required load-sensitive or closed-center 15 to 30 gpm at 2000 psi
Hitch	dedicated dual-link
Width	9 feet 10 inches (3.0 m)
Length	25 feet 0 inches (7.62 m)
Height	11 feet 2 inches (3.4 m)
Clearance	23 inches (58 cm)
Tire Sizes	23.5L/55-26 12-Ply

Minimum Towing Vehicle

WARNING

The tractor must weigh at least 2/3 (67%) of the weights shown. The tractor must also be rated for towing and braking the total load shown.

Assembly Weight for ADC2352 Air Cart Plus CTA4000[a]

	-8006		-6575		-5010	
	ADC2350/E Empty	ADC2352 Full	ADC2350/E Empty	ADC2352 Full	ADC2350/E Empty	ADC2352 Full
No Weight Kits	21773 lbs (9876 kg)	44173 lbs (20037 kg)	20700 lbs (9389 kg)	43100 lbs (19550 kg)	19748 lbs (8958 kg)	42148 lbs (19118 kg)
1 Weight Kit	23173 lbs (10511 kg)	45573 lbs (20672 kg)	22100 lbs (10024 kg)	44500 lbs (20185 kg)	21148 lbs (9593 kg)	43548 lbs (19753 kg)
2 Weight Kits	24573 lbs (11146 kg)	46973 lbs (21307 kg)	23500 lbs (10659 kg)	45900 lbs (20820 kg)	22548 lbs (10228 kg)	44948 lbs (20388 kg)

a. Data does not include markers.

Assembly Weight for ADC2350/E Air Cart Plus CTA4000HD[a]

CTA4000HD Model	-8006 (6 in)	-6575 (7.5 in)	-5010 (10 in)
ADC2350/E Empty	28653 lbs (12997 kg)	27340 lbs (12401 kg)	26148 lbs (11861 kg)
ADC2350/E Full	51053 lbs (23157 kg)	49740 lbs (22562 kg)	48548 lbs (22021 kg)

a. Data includes standard (four) weight kits, but does not include markers.

Assembly Weight for ADC2350/E Air Cart Plus CTA4500[a]

CTA4500 Model	-9006 (6 in)	-7275 (7.5 in)	-5410 (10 in)
ADC2350/E Empty	23553 lbs (105938 kg)	19240 lbs (8727 kg)	18048 lb (8186 kg)
ADC2350/E Full	45953 lbs (20844kg)	41640 lbs (18888)	40448 lb (18347 kg)

a. Data includes standard (four) weight kits, but does not include markers.

Assembly Weight for ADC2350/E Air Cart Plus CTA4500HD[a]

CTA4500HD Model	-9006 (6 in)	-7275 (7.5 in)	-5410 (10 in)
ADC2350/E Empty	23553 lbs (105938 kg)	19240 lbs (8727 kg)	18048 lb (8186 kg)
ADC2350/E Full	45953 lbs (20844kg)	41640 lbs (18888)	40448 lb (18347 kg)

a. Data includes standard (four) weight kits, but does not include markers.

Assembly Weight for ADC2350/E Air Cart Plus FCA4500[a]

FCA4500 Model	-7275 (7.5 in)	-5410 (10 in)
ADC2350/E Empty	36800 lbs (16692 kg)	35000 lbs (15876 kg)
ADC2350/E Full	59200 lbs (26853 kg)	57400 lbs (26036 kg)

a. Data includes standard (four) weight kits, but does not include markers.

Assembly Weight for ADC2350/E Air Cart Plus NTA3010[a]

NTA3010	-3610 (10 in)		-4875 (7.5 in)	
Rows	ADC2350/E Empty	ADC2352 Full	ADC2352 Empty	ADC2352 Full
No Weight Kits	23800 lbs (10795 kg)	46200 lbs (20956 kg)	25750 lbs (11680 kg)	48150 lbs (21840 kg)
1 Weight Kit	25200 lbs (11431 kg)	47600 lbs (21591 kg)	27150 lbs (12315 kg)	49550 lbs (22476 kg)
2 Weight Kits	26600 lbs (12066 kg)	49000 lbs (22226 kg)	28550 lbs (12950 kg)	50950 lbs (23111 kg)
3 Weight Kits	28000 lbs (12701 kg)	50400 lbs (22861 kg)	29950 lbs (13585 kg)	52350 lbs (23746 kg)
4 Weight Kits	29400 lbs (13336 kg)	51800 lbs (23496 kg)	31350 lbs (14220 kg)	53750 lbs (24381 kg)

a. Data does not include markers.

Assembly Weight for ADC2350/E Air Cart Plus NTA3510[a]

NTA3510	-4010 (10 in)		-5575 (7.5 in)	
Rows	ADC2352 Empty	ADC2352 Full	ADC2352 Empty	ADC2352 Full
No Weight Kits	24600 lbs (11158 kg)	47000 lbs (21319 kg)	26900 lbs (12202 kg)	49300 lbs (22362 kg)
1 Weight Kit	26000 lbs (11793 kg)	48400 lbs (21954 kg)	28300 lbs (12837 kg)	50700 lbs (22997 kg)

Assembly Weight for ADC2350/E Air Cart Plus NTA3510[a]

NTA3510	-4010 (10 in)		-5575 (7.5 in)	
Rows	ADC2352 Empty	ADC2352 Full	ADC2352 Empty	ADC2352 Full
2 Weight Kits	27400 lbs (12428 kg)	49800 lbs (22589 kg)	29700 lbs (13472 kg)	52100 lbs (23632 kg)
3 Weight Kits	28800 lbs (13063 kg)	51200 lbs (23224 kg)	31100 lbs (14107 kg)	53500 lbs (24267 kg)
4 Weight Kits	30200 lbs (13698 kg)	52600 lbs (23859 kg)	32500 lbs (14742 kg)	54900 lbs (24902 kg)

a. Data does not include markers.

NTA3010 Material Rates

Planting Rate Chart

Pounds per Acre Range		Star Shaft			Gear Configuration						Calibration Factor Meter Outlets		
		Small Seeds	Two Star	Four Star	Driving			Driven					
5 mph	7 mph				17-T	36-T	54-T	17-T	36-T	54-T	4	5	6
Wheat													
175 - 300	125 - 245			■			■	■			5.60	7.00	8.40
20 - 140	15 - 100			■	■					■	0.58	0.73	0.87
20 - 230	15 - 165			■			■		■		2.78	3.48	4.17
105 - 300	75 - 245			■		■				■	1.24	1.55	1.86
85 - 230	60 - 165		■				■	■			2.70	3.38	4.05
35 - 230	25 - 165		■				■		■		1.30	1.63	1.95
20 - 145	15 - 105		■			■				■	0.60	0.75	0.90
Soybeans													
175 - 300	125 - 245			■			■	■			5.75	7.19	8.63
30 - 140	20 - 100			■	■					■	0.60	0.75	0.90
80 - 300	55 - 245			■			■		■		2.80	3.50	4.20
85 - 175	60 - 125		■				■	■			2.50	3.13	3.75
15 - 55	10 - 40		■		■					■	0.27	0.34	0.41
35 - 175	25 - 125		■				■		■		1.30	1.63	1.95
20 - 140	15 - 100		■			■				■	0.60	0.75	0.90
Barley / Oats													
115 - 300	80 - 245			■			■	■			3.95	4.94	5.93
60 - 230	42 - 165			■			■		■		1.90	2.38	2.85
35 - 205	25 - 145			■		■				■	0.89	1.11	1.34
25 - 115	20 - 80		■				■		■		0.97	1.21	1.46
20 - 85	15 - 60		■			■				■	0.42	0.53	0.63
Milo													
1 - 8	1 - 6	■			■					■	0.06	0.08	0.09
3 - 20	2 - 15	■				■				■	0.09	0.11	0.14
12 - 70	8 - 50	■					■	■			0.52	0.65	0.78
Canola													
3 - 6	2 - 4	■			■					■	0.06	0.08	0.09
Fertilizer													
20 - 145	10 - 80			■	■					■	0.66	0.83	0.99
38 - 215	20 - 125			■			■		■		3.04	3.80	4.55
215 - 300	124 - 300			■			■	■			6.09	7.62	9.14

Select a desired range of kilograms per hectare for your product, and use the corresponding star shaft, driving / driven gear configuration, and initial calibration factor for planting.

NTA3510 Material Rates

Planting Rate Chart

Pounds per Acre Range		Star Shaft			Gear Configuration						Calibration Factor Meter Outlets		
		Small Seeds	Two Star	Four Star	Driving			Driven					
5 mph	7 mph				17-T	36-T	54-T	17-T	36-T	54-T	4	5	6
Wheat													
183 - 300	130 - 240			■			■	■			5.60	7.00	8.40
28 - 145	20 - 105			■	■					■	0.58	0.73	0.87
28 - 245	20 - 175			■			■		■		2.78	3.48	4.17
113 - 300	80 - 240			■		■				■	1.24	1.55	1.86
92 - 245	65 - 175		■				■	■			2.70	3.38	4.05
36 - 245	25 - 175		■				■		■		1.30	1.63	1.95
28 - 155	20 - 110		■			■				■	0.60	0.75	0.90
Soybeans													
185 - 300	130 - 240			■			■	■			5.75	7.19	8.63
30 - 145	20 - 105			■	■					■	0.60	0.75	0.90
85 - 300	60 - 240			■			■		■		2.80	3.50	4.20
90 - 185	65 - 130		■				■	■			2.50	3.13	3.75
15 - 65	10 - 45		■		■					■	0.27	0.34	0.41
35 - 185	25 - 130		■				■		■		1.30	1.63	1.95
30 - 145	20 - 105		■			■				■	0.60	0.75	0.90
Barley / Oats													
125 - 337	90 - 240			■			■	■			3.95	4.94	5.93
65 - 246	45 - 175			■			■		■		1.90	2.38	2.85
35 - 218	25 - 155			■		■				■	0.89	1.11	1.34
30 - 127	20 - 90		■				■		■		0.97	1.21	1.46
30 - 92	20 - 65		■			■				■	0.42	0.53	0.63
Milo													
1 - 9	1 - 6	■			■					■	0.06	0.08	0.09
4 - 24	3 - 17	■				■				■	0.09	0.11	0.14
12 - 70	9 - 50	■					■	■			0.52	0.65	0.78
Canola													
2 - 6	2 - 4	■			■					■	0.06	0.08	0.09
Fertilizer													
20 - 145	10 - 80			■	■					■	0.66	0.83	0.99
38 - 215	20 - 125			■			■		■		3.04	3.80	4.55
215 - 300	124 - 300			■			■	■			6.09	7.62	9.14

Select a desired range of kilograms per hectare for your product, and use the corresponding star shaft, driving / driven gear configuration, and initial calibration factor for planting.

CTA4000 Material Rates

Planting Rate Chart

Pounds per Acre Range		Star Shaft			Gear Configuration						Calibration Factor Meter Outlets		
		Small Seeds	Two Star	Four Star	Driving			Driven					
5 mph	7 mph				17-T	36-T	54-T	17-T	36-T	54-T	4	5	6
Wheat													
160 - 300	115 - 235			■			■	■			5.60	7.00	8.40
21 - 135	15 - 95			■	■					■	0.58	0.73	0.87
20 - 220	15 - 155			■			■		■		2.78	3.48	4.17
100 - 300	70 - 235			■		■				■	1.24	1.55	1.86
85 - 220	60 - 155		■				■	■			2.70	3.38	4.05
35 - 220	25 - 155		■				■		■		1.30	1.63	1.95
20 - 140	15 - 100		■			■				■	0.60	0.75	0.90
Soybeans													
160 - 300	115 - 235			■			■	■			5.75	7.19	8.63
20 - 135	15 - 95			■	■					■	0.60	0.75	0.90
75 - 300	55 - 235			■			■		■		2.80	3.50	4.20
80 - 160	55 - 115		■				■	■			2.50	3.13	3.75
15 - 55	10 - 40		■		■					■	0.27	0.34	0.41
35 - 160	25 - 115		■				■		■		1.30	1.63	1.95
20 - 135	15 - 95		■			■				■	0.60	0.75	0.90
Barley / Oats													
115 - 300	80 - 235			■			■	■			3.95	4.94	5.93
55 - 220	40 - 155			■			■		■		1.90	2.38	2.85
35 - 190	25 - 135			■		■				■	0.89	1.11	1.34
25 - 115	20 - 80		■				■		■		0.97	1.21	1.46
20 - 85	15 - 60		■			■				■	0.42	0.53	0.63
Milo													
1 - 8	1 - 5	■			■					■	0.06	0.08	0.09
3 - 21	2 - 15	■				■				■	0.09	0.11	0.14
11 - 63	8 - 45	■					■	■			0.52	0.65	0.78
Canola													
2 - 5	2 - 4	■			■					■	0.06	0.08	0.09
Fertilizer													
20 - 125	10 - 75			■	■					■	0.66	0.83	0.99
30 - 180	20 - 115			■			■		■		3.04	3.80	4.55
180 - 300	115 - 300			■			■	■			6.09	7.62	9.14

Select a desired range of kilograms per hectare for your product, and use the corresponding star shaft, driving / driven gear configuration, and initial calibration factor for planting.

CTA4500 Material Rates

Planting Rate Chart

Pounds per Acre Range		Star Shaft			Gear Configuration						Calibration Factor Meter Outlets		
					Driving			Driven					
5 mph	7 mph	Small Seeds	Two Star	Four Star	17-T	36-T	54-T	17-T	36-T	54-T	4	5	6
Wheat													
175 - 300	125 - 250			■			■	■			5.60	7.00	8.40
21 - 140	15 - 100			■	■					■	0.58	0.73	0.87
21 - 230	15 - 165			■			■		■		2.78	3.48	4.17
105 - 300	75 - 250			■		■				■	1.24	1.55	1.86
85 - 230	60 - 165		■				■	■			2.70	3.38	4.05
35 - 230	25 - 165		■				■		■		1.30	1.63	1.95
21 - 150	15 - 105		■			■				■	0.60	0.75	0.90
Soybeans													
175 - 300	125 - 250			■			■	■			5.75	7.19	8.63
20 - 140	15 - 100			■	■					■	0.60	0.75	0.90
85 - 300	60 - 250			■			■		■		2.80	3.50	4.20
85 - 175	60 - 125		■				■	■			2.50	3.13	3.75
15 - 55	10 - 40		■		■					■	0.27	0.34	0.41
35 - 175	25 - 125		■				■		■		1.30	1.63	1.95
20 - 140	15 - 100		■			■				■	0.60	0.75	0.90
Barley / Oats													
120 - 300	85 - 250			■			■	■			3.95	4.94	5.93
55 - 230	40 - 165			■			■		■		1.90	2.38	2.85
35 - 205	25 - 145			■		■				■	0.89	1.11	1.34
30 - 120	20 - 85		■				■		■		0.97	1.21	1.46
20 - 85	15 - 60		■			■				■	0.42	0.53	0.63
Milo													
1 - 8	1 - 6	■			■					■	0.06	0.08	0.09
4 - 20	2 - 15	■				■				■	0.09	0.11	0.14
12 - 70	8 - 50	■					■	■			0.52	0.65	0.78
Canola													
2 - 6	2 - 4	■			■					■	0.06	0.08	0.09
Fertilizer													
20 - 135	10 - 75			■	■					■	0.66	0.83	0.99
35 - 200	20 - 115			■			■		■		3.04	3.80	4.55
200 - 300	115 - 300			■			■	■			6.09	7.62	9.14

Select a desired range of kilograms per hectare for your product, and use the corresponding star shaft, driving / driven gear configuration, and initial calibration factor for planting.

FCA4500 Material Rates

Planting Rate Chart

Pounds per Acre Range		Star Shaft			Gear Configuration						Calibration Factor Meter Outlets		
					Driving			Driven					
5 mph	7 mph	Small Seeds	Two Star	Four Star	17-T	36-T	54-T	17-T	36-T	54-T	4	5	6
Wheat													
175 - 300	125 - 250			■			■	■			5.60	7.00	8.40
21 - 140	15 - 100			■	■					■	0.58	0.73	0.87
21 - 230	15 - 165			■			■		■		2.78	3.48	4.17
105 - 300	75 - 250			■		■				■	1.24	1.55	1.86
85 - 230	60 - 165		■				■	■			2.70	3.38	4.05
35 - 230	25 - 165		■				■		■		1.30	1.63	1.95
21 - 150	15 - 105		■			■				■	0.60	0.75	0.90
Soybeans													
175 - 300	125 - 250			■			■	■			5.75	7.19	8.63
20 - 140	15 - 100			■	■					■	0.60	0.75	0.90
85 - 300	60 - 250			■			■		■		2.80	3.50	4.20
85 - 175	60 - 125		■				■	■			2.50	3.13	3.75
15 - 55	10 - 40		■		■					■	0.27	0.34	0.41
35 - 175	25 - 125		■				■		■		1.30	1.63	1.95
20 - 140	15 - 100		■			■				■	0.60	0.75	0.90
Barley / Oats													
120 - 300	85 - 250			■			■	■			3.95	4.94	5.93
55 - 230	40 - 165			■			■		■		1.90	2.38	2.85
35 - 205	25 - 145			■		■				■	0.89	1.11	1.34
30 - 120	20 - 85		■				■		■		0.97	1.21	1.46
20 - 85	15 - 60		■			■				■	0.42	0.53	0.63
Milo													
1 - 8	1 - 6	■			■					■	0.06	0.08	0.09
4 - 20	2 - 15	■				■				■	0.09	0.11	0.14
12 - 70	8 - 50	■					■	■			0.52	0.65	0.78
Canola													
2 - 6	2 - 4	■			■					■	0.06	0.08	0.09
Fertilizer													
20 - 135	10 - 75			■	■					■	0.66	0.83	0.99
35 - 200	20 - 115			■			■		■		3.04	3.80	4.55
200 - 300	115 - 300			■			■	■			6.09	7.62	9.14

Select a desired range of kilograms per hectare for your product, and use the corresponding star shaft, driving / driven gear configuration, and initial calibration factor for planting.

Torque Values Chart

Bolt Size	Bolt Head Identification					
	Grade 2		Grade 5		Grade 8	
in-tpi[a]	N-m[b]	ft-lb[d]	N-m	ft-lb	N-m	ft-lb
1/4-20	7.4	5.6	11	8	16	12
1/4-28	8.5	6	13	10	18	14
5/16-18	15	11	24	17	33	25
5/16-24	17	13	26	19	37	27
3/8-16	27	20	42	31	59	44
3/8-24	31	22	47	35	67	49
7/16-14	43	32	67	49	95	70
7/16-20	49	36	75	55	105	78
1/2-13	66	49	105	76	145	105
1/2-20	75	55	115	85	165	120
9/16-12	95	70	150	110	210	155
9/16-18	105	79	165	120	235	170
5/8-11	130	97	205	150	285	210
5/8-18	150	110	230	170	325	240
3/4-10	235	170	360	265	510	375
3/4-16	260	190	405	295	570	420
7/8-9	225	165	585	430	820	605
7/8-14	250	185	640	475	905	670
1-8	340	250	875	645	1230	910
1-12	370	275	955	705	1350	995
1 1/8-7	480	355	1080	795	1750	1290
1 1/8-12	540	395	1210	890	1960	1440
1 1/4-7	680	500	1520	1120	2460	1820
1 1/4-12	750	555	1680	1240	2730	2010
1 3/8-6	890	655	1990	1470	3230	2380
1 3/8-12	1010	745	2270	1670	3680	2710
1 1/2-6	1180	870	2640	1950	4290	3160
1 1/2-12	1330	980	2970	2190	4820	3560

Bolt Size	Bolt Head Identification					
	5.8 Class 5.8		8.8 Class 8.8		10.9 Class 10.9	
mm x pitch[c]	N-m	ft-lb	N-m	ft-lb	N-m	ft-lb
M 5 X 0.8	4	3	6	5	9	7
M 6 X 1	7	5	11	8	15	11
M 8 X 1.25	17	12	26	19	36	27
M 8 X 1	18	13	28	21	39	29
M10 X 1.5	33	24	52	39	72	53
M10 X 0.75	39	29	61	45	85	62
M12 X 1.75	58	42	91	67	125	93
M12 X 1.5	60	44	95	70	130	97
M12 X 1	90	66	105	77	145	105
M14 X 2	92	68	145	105	200	150
M14 X 1.5	99	73	155	115	215	160
M16 X 2	145	105	225	165	315	230
M16 X 1.5	155	115	240	180	335	245
M18 X 2.5	195	145	310	230	405	300
M18 X 1.5	220	165	350	260	485	355
M20 X 2.5	280	205	440	325	610	450
M20 X 1.5	310	230	650	480	900	665
M24 X 3	480	355	760	560	1050	780
M24 X 2	525	390	830	610	1150	845
M30 X 3.5	960	705	1510	1120	2100	1550
M30 X 2	1060	785	1680	1240	2320	1710
M36 X 3.5	1730	1270	2650	1950	3660	2700
M36 X 2	1880	1380	2960	2190	4100	3220

a. in-tpi = nominal thread diameter in inches-threads per inch

b. N· m = newton-meters

c. mm x pitch = nominal thread diameter in mm x thread pitch

d. ft-lb = foot pounds

Torque tolerance + 0%, -15% of torquingvalues. Unless otherwise specified use torquevalues listed above. 25199

Tire Chart

Tire Size	Maximum Tire Pressure	Wheel Bolt Torque
23.5L/55-26 12-Ply	40 psi (276 kPa)	265 lb-ft (359 Nm)
30.5L R32 170 Load Index 16 Ply	30 psi 207 kPa	265 lb-ft (359 Nm)

Tire Warranty Information

All tires are warranted by the original manufacturer of the tire. Tire warranty information is found in the brochures included with your Operator's and Parts Manuals or online at the manufacturer's web sites listed below. For assistance or information, contact your nearest Authorized Farm Tire Retailer.

Manufacturer	Web Site
Titan	www.titan-intl.com
Goodyear	www.titan-intl.com
Firestone	www.firestoneag.com
BKT	www.bkt-tires.com/en

Chain Routing

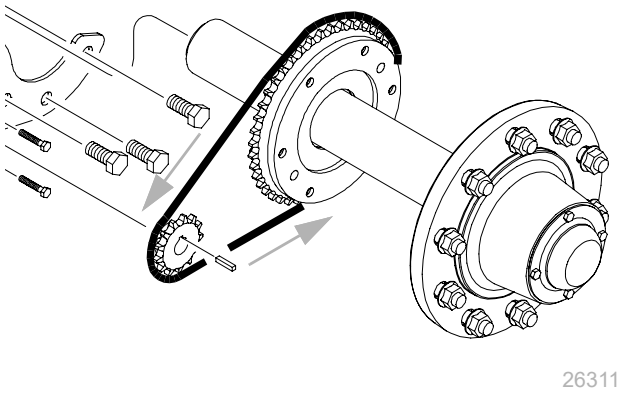

Main Hub Chain

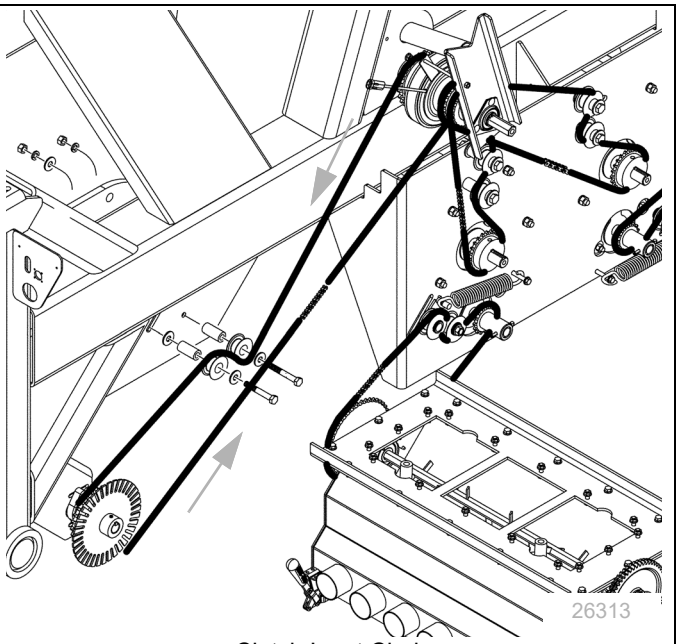

Clutch Input Chain

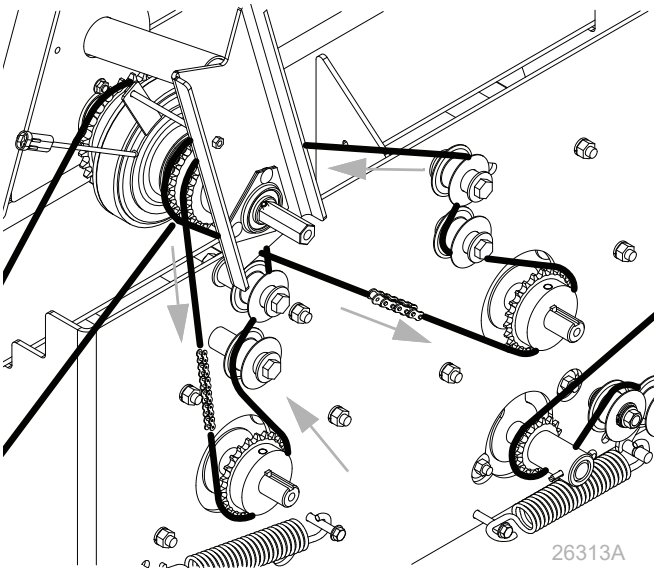

Gearbox Input Chains

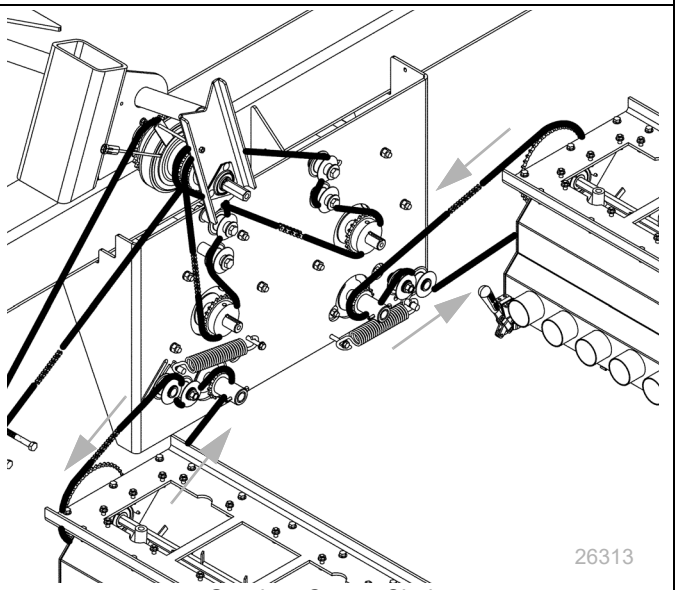

Gearbox Output Chains

Hydraulic Diagrams

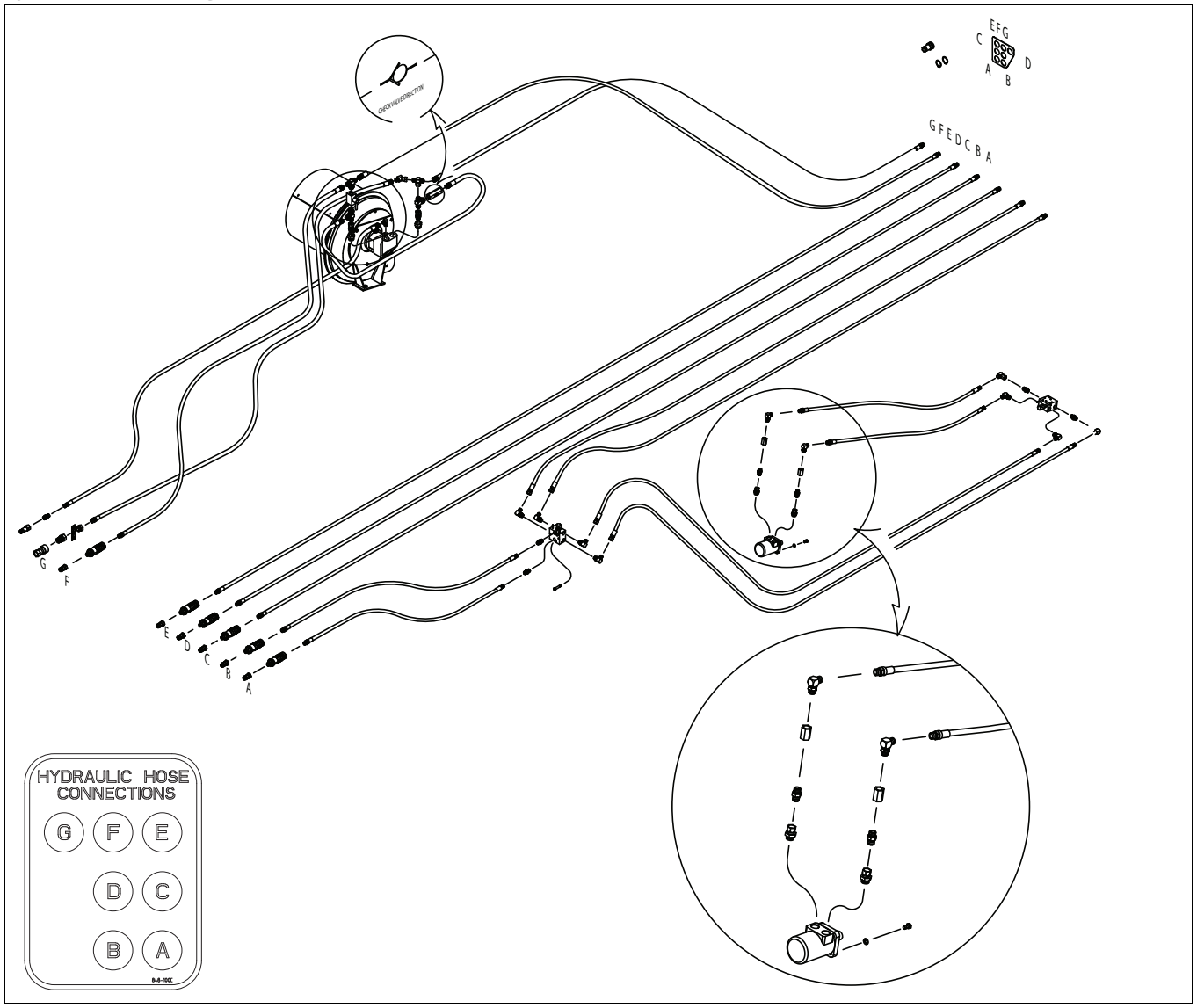

ADC2350/E Hydraulic Circuits

Used With	Green	Blue	Black	No Color
Cart CTA4000	Auger Marker (A) Marker (B)	Not Used Lift / Fold (C) Lower / Unfold (D)	Fan (F only) Not Used (E) Not Used (F)	Fan Sump Return Sump Return (G)
Cart CTA4000HD	Auger Marker (A) Marker (B)	Not Used Lift / Fold (C) Lower / Unfold (D)	Fan (F only) Not Used (E) Not Used (F)	Fan Sump Return Sump Return (G)
Cart NTA3010	Auger Marker (A) Marker (B)	Not Used Lift, Rod End (C) Lift, Base End (D)	Fan (F only) Fold, Rod End (E) Fold, Base End (F)	Fan Sump Return Sump Return (G)
Cart NTA3510	Auger Marker (A) Marker (B)	Not Used Lift, Rod End (C) Lift, Base End (D)	Fan (F only) Fold, Rod End (E) Fold, Base End (F)	Fan Sump Return Sump Return (G)

Hydraulic Diagrams - Hydraulic Drive (Option)

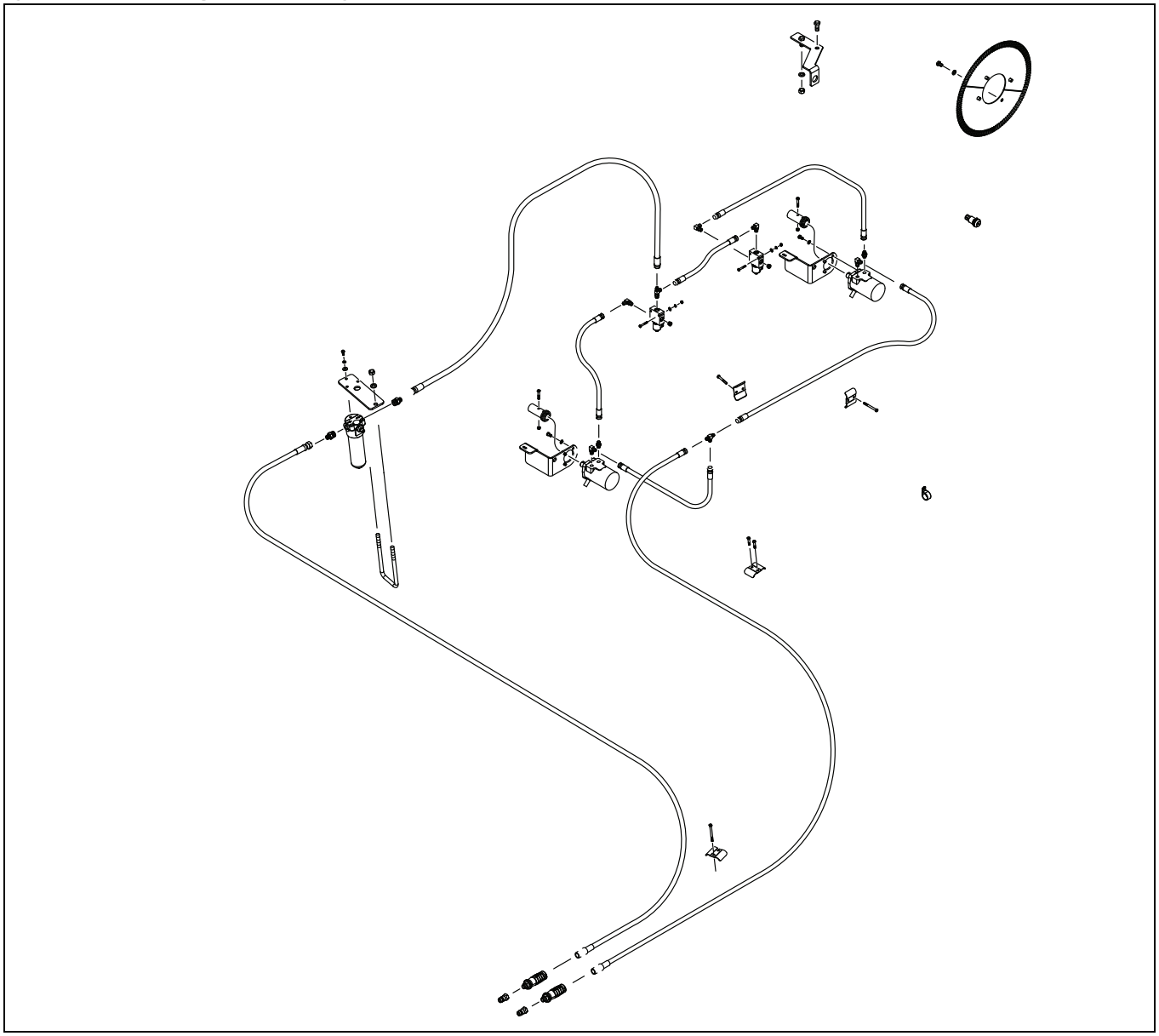

ADC2350/E Hydraulic Drive Circuits

Used With	Yellow
Cart CTA4000	Hydraulic Drive Hydraulic Motor
Cart CTA4000HD	Auger Marker (A) Marker (B)
Cart NTA3010	Auger Marker (A) Marker (B)
Cart NTA3510	Auger Marker (A) Marker (B)

Hydraulic Fan

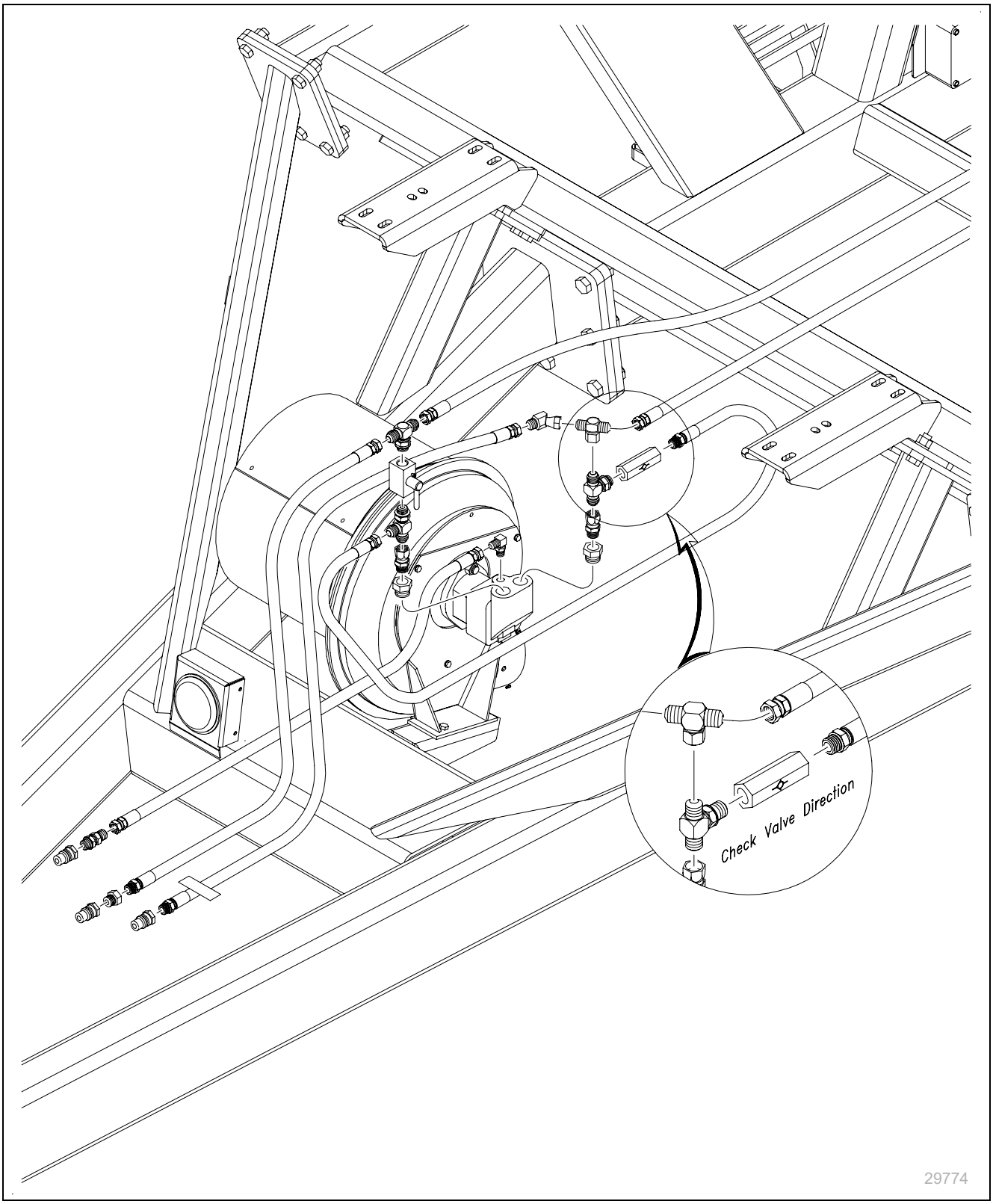

Appendix B - Pre-Delivery Instructions

This Appendix covers setup tasks performed by the dealer before delivery.

Light Bar Assembly

Use the following directions as reference for positioning the decal brackets, lights, and wishbone harness:

AFront
BRight
CRear
DLeft

1. Insert the wishbone harness (1) into the light bar tube at the front, middle hole (2). Bring out the light connectors at the holes near the ends of the tube.

   Make sure the green taped portion of the harness goes to the right-hand side (3) and the yellow taped portion goes to the left-hand side (4).

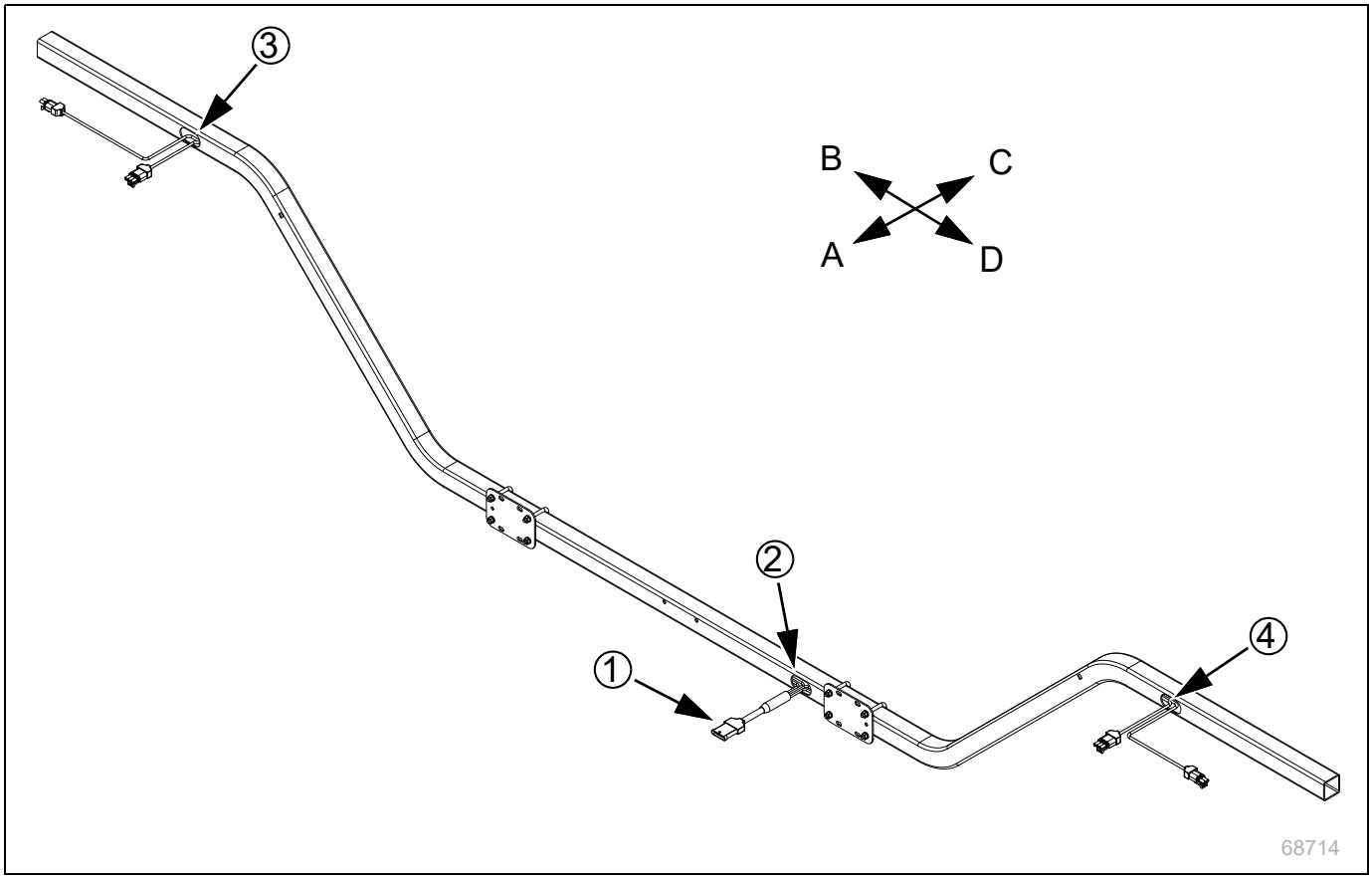

2. Install the light bar braces (5) to the light bar tube (6) with 3/8-16 x 2-3/4 inch round head square neck bolts (7), lock washers, and nuts.
3. Install a decal mount bracket (8) to each end of the light bar with two 5/16-18 x 2-1/32 x 2-11/16 inch U-bolts (9), lock washers, and nuts.

   Make sure to position the decal bracket with the red reflector (10) on the outside facing to the rear.
4. Install the amber lights (11) at each end of the light bar with two 1/4-20 x 2-9/32 x 3 inch U-bolts and nylock nuts.
5. Install the red lights (12) as shown with two 1/4-20 x 2-9/32 x 3 inch U-bolts and nylock nuts. Make sure the red lights face to the rear of the light bar.

6. Install the SMV reflector (13) onto the bracket (14) with two 1/4-20 x 5/8 inch screws, lock washers, and nuts.

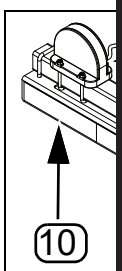

68713

7. Plug i

Great Plains
"Harvest Starts Here."

WARRANTY

Great Plains (a division of Great Plains Manufacturing, Inc.) warrants to the original purchaser that this Great Plains machine will be free from defects in material and workmanship for a period of one year (Parts & Labor) from the first use date when used as intended for personal use; ninety days for custom/commercial or rental use.

Second year limited warranty covers Parts ONLY (personal usage only, excluding labor and wear items). This warranty is limited to the replacement of any defective part by Great Plains. Great Plains reserves the right to inspect any equipment or part which are claimed to have been defective in material or workmanship.

The following items and/or conditions are **NOT COVERED UNDER WARRANTY:** Failures resulting from the abuse or misuse of the equipment, failures occurring as a result of accidental damage or Force Majeure, failures resulting from alterations or modifications, failures caused by lack of normal maintenance as outlined in the operator's manual, repairs made by non-authorized personnel, items replaced or repaired due to normal wear (such as wear items and ground-engaging components includiing, but not limited to, disc blades, chisel points, tires, bushings, and scrapers), repeat repair due to improper diagnosis or improper repair by the dealer, temporary repairs, service call and /or mileage to and from customer location, overtime premium, or unit hauling expenses. The warranty may be voided if the unit is towed at speeds in excess of 20 miles per hour (32 kilometers per hour), or failures occurring from soils with rocks, stumps, or other obstructions.

Great Plains reserves the right to make changes in materials or design of the product at any time without notice. The warranty shall not be intepreted to render Great Plains liable for damages of any kind, direct or consequential or contingent to property. Furthermore, Great Plains shall not be liable for damages resulting from any cause beyond its control. This warranty does not extend to crop loss, losses caused by planting or harvest delays or any expense or loss of labor, supplies, rental machinery, or for any other reason.

No other warranty of any kind whatsoever expressed or implied, is made with respect to this sale; and all implied warranties of merchantability and fitness for a partciular purpose which exceed the obligations set forth in this written warranty are hereby disclaimed and excluded from this sale.

This warranty is not valid unless registered by a certified Great Plains dealer.

Effective July 15, 2020

Light Bar Installation

1. Remove the “Great Plains” decal plate (1).
2. Install the light bar assembly. Be careful not to damage the lights on the ends of the bar.
   a. With the red lights (2) facing to the rear of the machine, mount the light bar tube (3) on the hopper hoops (4) with four 5/16-18 x 2 x 2 11/16 inch U-bolts, flat washers, lock washers, and nuts (5).
   b. Install the “Great Plains” decal plate onto the light bar braces (6) and secure to hopper hoops with four 5/16-18 x 1/2 inch bolts (7).

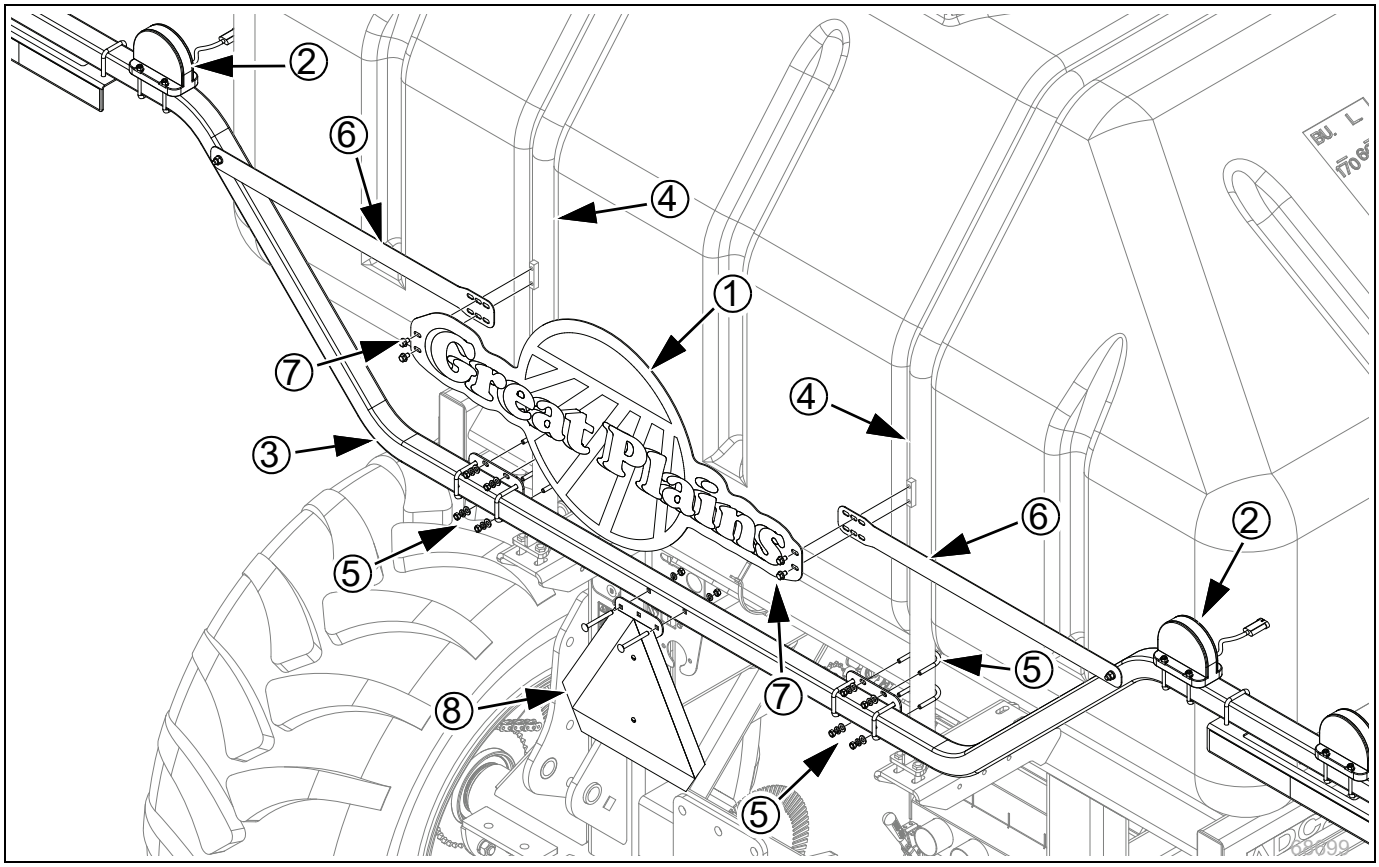

3. Install the SMV assembly (8) and secure to the light bar tube with two 5/16-18 x 3 round head square neck bolts (9), lock washers, and nuts.
4. Plug in the wishbone harness connector to the module installed on the module plate (10) at the rear of the cart frame.
5. Check the lights to make sure they work correctly.

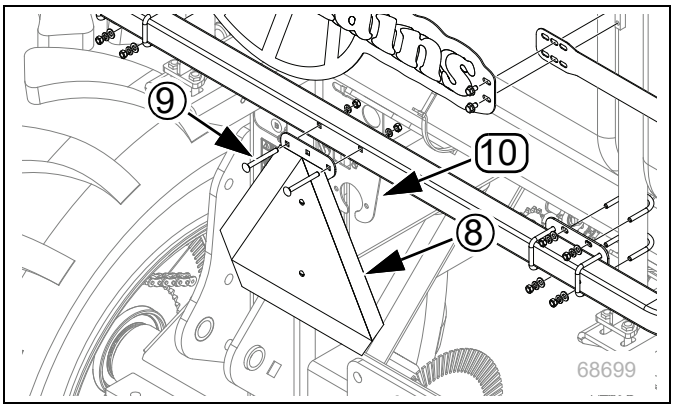

Index

Great Plains

"Harvest Starts Here."

Great Plains, Mfg.
1525 E. North St.
P.O. Box 5060
Salina, KS 67402