Table of Contents

Pre-Delivery Manual

2S-2600HD

26-Foot 2-Section Folding HD Drill

Great Plains
Manufacturing, Inc.
www.greatplainsmfg.com

Read the operator's manual entirely. When you see this symbol, the subsequent instructions and warnings are serious - follow without exception. Your life and the lives of others depend on it!

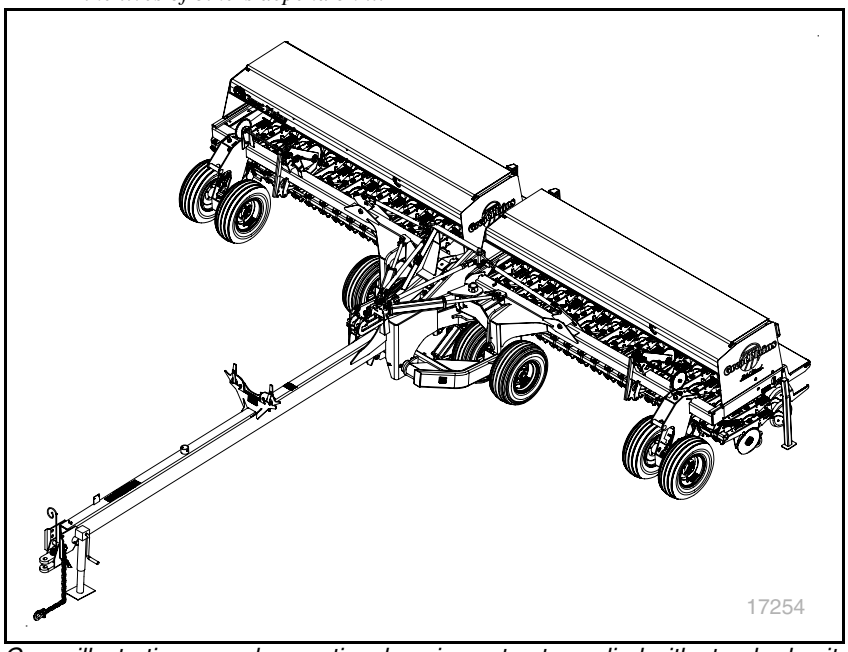

Cover illustration may show optional equipment not supplied with standard unit.

ORIGINAL INSTRUCTIONS

EN

Printed 04/25/2019

195-069Q

Table of Contents

Table of Contents

Printed in the United States of America

Important Safety Information

For your safety, thoroughly read **Important Safety Information** in the operator's manuals before proceeding.

Look for Safety Symbol

The SAFETY ALERT SYMBOL indicates there is a potential hazard to personal safety involved and extra safety precaution must be taken. When you see this symbol, be alert and carefully read the message that follows it. In addition to design and configuration of equipment, hazard control and accident prevention are dependent upon the awareness, concern, prudence and proper training of personnel involved in the operation, transport, maintenance and storage of equipment.

Be Aware of Signal Words

Signal words designate a degree or level of hazard seriousness.

DANGER indicates an imminently hazardous situation which, if not avoided, will result in death or serious injury. This signal word is limited to the most extreme situations, typically for machine components that, for functional purposes, cannot be guarded.

WARNING indicates a potentially hazardous situation which, if not avoided, could result in death or serious injury, and includes hazards that are exposed when guards are removed. It may also be used to alert against unsafe practices.

CAUTION indicates a potentially hazardous situation which, if not avoided, may result in minor or moderate injury. It may also be used to alert against unsafe practices.

Transport Machinery Safely

Maximum transport speed for drill is 20 mph (32 kph). Some rough terrains require a slower speed. Sudden braking can cause a towed load to swerve and upset.

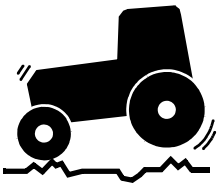

- ▲ *Do not exceed 20 mph (32 kph). Never travel at a speed which does not allow adequate control of steering and stopping. Reduce speed if towed load is not equipped with brakes.*
- ▲ *Comply with national, regional and local laws.*
- ▲ *Follow your tractor manual recommendations for maximum hitch loads. Insufficient weight on tractor steering wheels will result in loss of control.*
- ▲ *Carry reflectors or flags to mark drill in case of breakdown on the road.*
- ▲ *Keep clear of overhead power lines and other obstructions when transporting. Refer to transport dimensions under "**Specifications and Capacities**" on page 27.*

Check for Overhead Lines

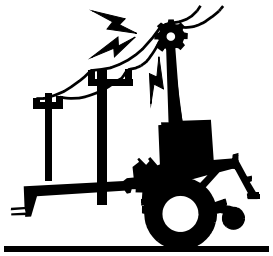

Drill markers contacting overhead electrical lines can introduce lethal voltage levels on drill and tractor frames. A person touching almost any metal part can complete the circuit to ground, resulting in serious injury or death.

▲ *Avoid overhead lines during seed loading/unloading and marker operations.*

Avoid High Pressure Fluids

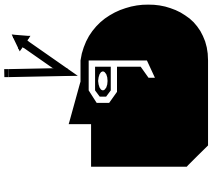

Escaping fluid under pressure can penetrate the skin, causing serious injury.

▲ *Avoid the hazard by relieving pressure before disconnecting hydraulic lines.*

▲ *Use a piece of paper or cardboard, NOT BODY PARTS, to check for suspected leaks.*

▲ *Wear protective gloves and safety glasses or goggles when working with hydraulic systems.*

▲ *If an accident occurs, see a doctor immediately. Any fluid injected into the skin must be surgically removed within a few hours or gangrene may result.*

Practice Safe Maintenance

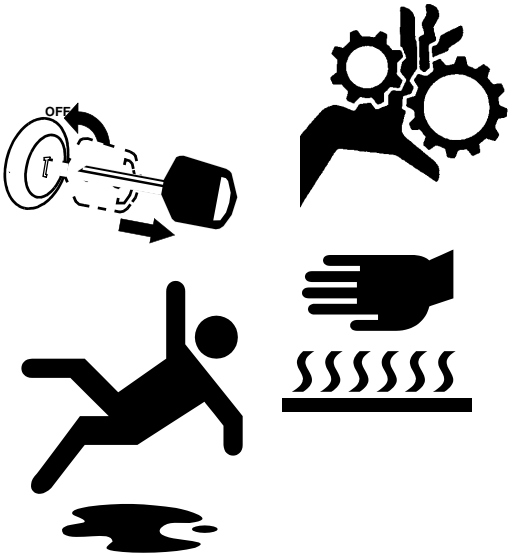

▲ *Understand procedure before doing work. Use proper tools and equipment. Refer to this manual for additional information.*

▲ *Work in a clean, dry area.*

▲ *Put tractor in park, turn off engine, and remove key before performing maintenance.*

▲ *Make sure all moving parts have stopped and all system pressure is relieved.*

▲ *Disconnect battery ground cable (-) before servicing or adjusting electrical systems or before welding on drill.*

▲ *Inspect all parts. Make sure parts are in good condition and installed properly.*

▲ *Remove buildup of grease, oil or debris.*

▲ *Remove all tools and unused parts from drill before operation.*

Tire Safety

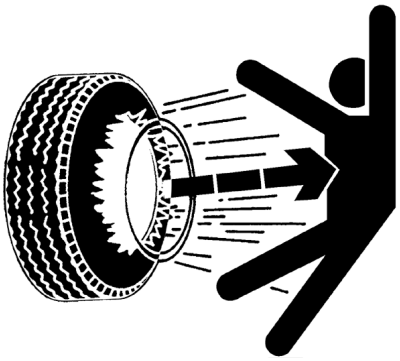

Tire changing can be dangerous and should be performed by trained personnel using correct tools and equipment.

▲ *When inflating tires, use a clip-on chuck and extension hose long enough for you to stand to one side–not in front of or over tire assembly. Use a safety cage if available.*

▲ *When removing and installing wheels, use wheel-handling equipment adequate for weight involved.*

Prepare for Emergencies

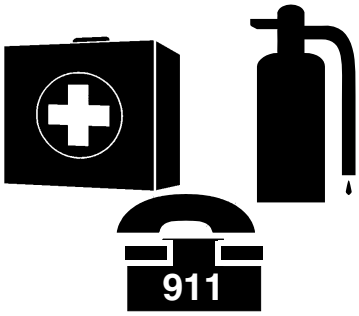

- ▲ *Be prepared if a fire starts*
- ▲ *Keep a first aid kit and fire extinguisher handy.*
- ▲ *Keep emergency numbers for doctor, ambulance, hospital and fire department near phone.*

Safety Decals

Safety Reflectors and Decals

Your implement comes equipped with all lights, safety reflectors and decals in place. They were designed to help you safely operate your implement.

- ▲ *Read and follow decal directions.*
- ▲ *Keep lights in operating condition.*
- ▲ *Keep all safety decals clean and legible.*
- ▲ *Replace all damaged or missing decals. Order new decals from your Great Plains dealer. Refer to this section for proper decal placement.*
- ▲ *When ordering new parts or components, also request corresponding safety decals.*

To install new decals:

1. Clean the area on which the decal is to be placed.
2. Peel backing from decal. Press firmly on surface, being careful not to cause air bubbles under decal.

Introduction

Great Plains Manufacturing wants you to be satisfied with any new machine delivered by the Great Plains Trucking network. To ease the assembly task and produce a properly working machine, read this entire manual before assembling or setting up new equipment.

Document Family

195-440M Operator's Manual
195-069P 2S-2600HD Parts Manual
195-325B Seed Rate Manual

Description of Unit

The 2S-2600HD is a towed seeding implement. This two-section drill has a working width of 26 feet and folds to a transport width of 15 feet. The drill has straight-arm, double-disk openers. The opener disks make a seed bed, and seed tubes mounted between the disks place seed in the furrow. Press wheels following the opener disks close the furrow and gauge opener seeding depth. A T-handle on the opener body is for seeding-depth adjustments. Seeding rates are adjustable with the seed rate-adjustment handle and sprocket changes.

The 2S-2600HD features active hydraulic down pressure on the opener frames. When used on a tractor with closed-center hydraulics, constant down pressure ensures even opener penetration in uneven ground. Hydraulic down pressure is adjustable at a single point.

Intended Usage

Use this implement to seed production-agriculture crops in conventional-tillage applications. Do not modify the drill for use with attachments other than Great Plains options and accessories specified for use with the 2S-2600HD Drill.

Models Covered

2S-2600HD-3210	32-row, 10 inch (25.4 cm)
2S-2600HD-4275	42-row, 7.5 inch (19 cm)
2S-2600HD-5206	52-row, 6 inch (15 cm)
2S-2600HDF-3210	32-row, 10 inch (25.4 cm)
2S-2600HDF-4275	42-row, 7.5 inch (19 cm)
2S-2600HDF-5206	52-row, 6 inch (15 cm)

Using This Manual

This manual was written to help you assemble and prepare the new machine for the customer. This manual includes instructions for assembly and setup. Read this manual and follow the recommendations for safe, efficient and proper assembly and setup.

An operator's manual is also provided with the new machine. Read and understand "**Important Safety Information**" and "**Operating Instructions**" in the operator's manual before assembling the machine. As a reference, keep the operator's manual on hand while assembling.

Definitions

The following terms are used throughout this manual.

Right-hand and left-hand as used in this manual are determined by facing the direction the machine will travel while in use unless otherwise stated.

NOTICE

Paragraphs in this format present a crucial point of information related to the current topic. For safe and correct operation, read and follow the directions provided before continuing.

NOTE:
Paragraphs in this format provide useful information related to the current topic.

Further Assistance

For additional help with understanding these assembly instructions or for any other assembly or setup related questions, please contact our service department at the following address:

Great Plains Service Department
1525 E. North St.
P.O. Box 5060
Salina, KS 67402-5060

Or call us at **(800) 270-9302** to speak over the phone with a service representative.

Copies of this machine's operator manual are available by mail or online. Please visit **www.greatplainsag.com** and follow the product link for information on your machine.

Assembly

The following headings are step-by-step instructions for assembling the drill. Begin with "**Tools Required**" and "**Pre-Assembly Checklist**" to make sure you have all necessary parts and equipment. Follow each step to make the job as quick and safe as possible and produce a properly working machine.

Unloading Truck

Before unloading the drill from the truck, connect all opener springs (1) to the opener frames (2).

NOTICE

Opener Damage Risk:
To prevent damage to openers, make sure all openers are connected before unloading the drill.

Unload all equipment before beginning assembly.

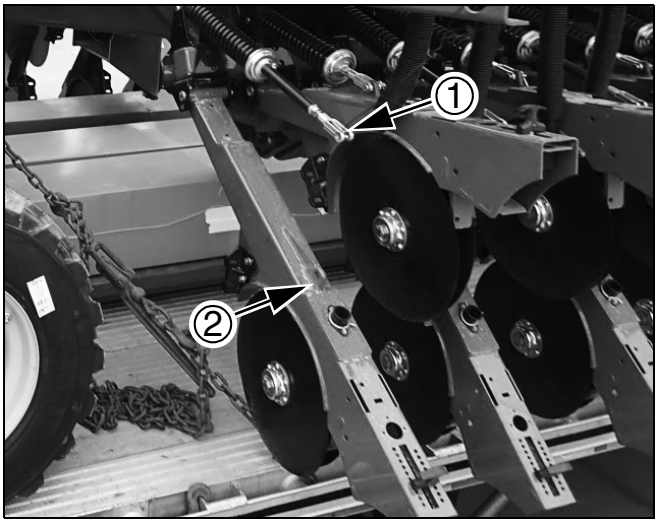

Figure 1
Opener Spring to Opener Frame
71302

Tools Required

- Forklift, loader or overhead hoist with a capacity of: at least 13,000 pounds (5900 kg)
- A tractor of sufficient size and horsepower with at least two remote hydraulic circuits. Refer to "**Specifications and Capacities**" in the Operator's Manual.
- General hand tools
- Jack stands or blocks and safety chain

NOTE:
You will need about 4.5 gallons of hydraulic oil to refill the tractor hydraulic reservoir after initial bleeding and cycling of the hydraulic systems.

Pre-Assembly Checklist

1. Read and understand "**Important Safety Information**" on page 1 before assembling.
2. Have at least two people on hand while assembling.
3. Make sure assembly area is level and free of obstructions (preferably an open concrete area).
4. Have all major components accounted for.
5. Have all fasteners and pins shipped with implement.

NOTICE

If a pre-assembled part or fastener is temporarily removed, remember where it goes. Keep the parts separated.

6. Have a copy of the implement Parts Manual on hand. If unsure of proper placement or use of any part or fastener, refer to the parts manual.
7. Check that all working parts are moving freely, bolts are tight, and cotter pins are spread.
8. Check that all factory-applied safety labels and reflectors are correctly located and legible. Replace if improperly located or damaged. Refer to **Safety Decals**, in the "**Important Safety Information**" section of the implement Operator's Manual.
9. Inflate tires to recommended pressure as listed on the "**Tire Inflation Chart**" on page 27.
10. Tighten wheel bolts as specified on "**Torque Values Chart**" on page 28.

Install Press Wheels

Refer to Figure 2.

1. Remove 1/2 x 3 3/4-inch flange bolt (1) and flange lock nut (4) from each opener body.
2. Leave pivot bushing (2) in place and bolt press-wheel arm (3) to opener with 1/2 x 3 3/4-inch flange bolt (1) and lock nut (4). Repeat for all openers.
3. Remove 5/8-inch bolt (5) from each press-wheel arm (3) and use bolts to assemble press wheels (6) to press-wheel arms.

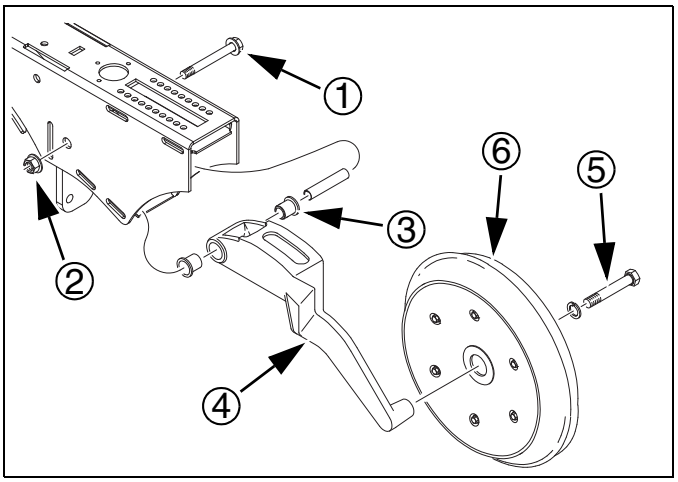

Figure 2 24432
Press Wheel Arm and Press Wheel Assembly

Install Walkboards

Refer to Figure 3

1. Remove 1/2-13 x 1 1/4-inch bolts (1) from end panels.
2. Bolt each walkboard (2) to box support channels (3) with 1/2-13 x 1 1/4 inch bolts, lock washer, and hex nuts.

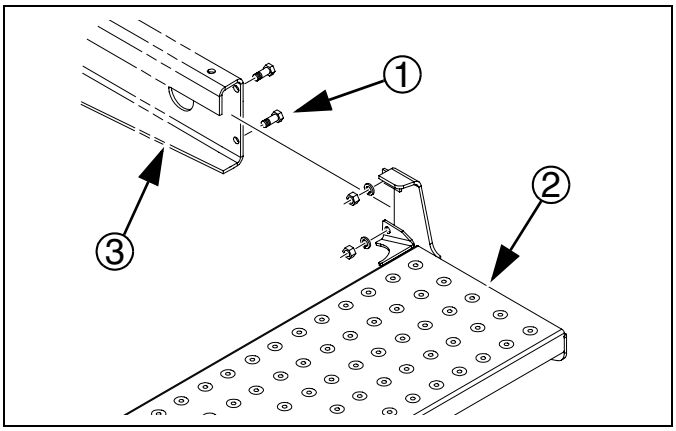

Figure 3 18810
Walkboard Installation

Install Ladder Mounts

Refer to Figure 4 and Figure 5.

Location of the ladder mounts depends on whether the drill has the small seeds option.

- For drills without the small seeds option, refer to Figure 4 as a reference.
- For drills with the small seeds option, refer to Figure 5 as a reference.

Top ladder mount weldments are provided in left-side and right-side versions and are not interchangeable. All other parts may be used on either end.

Start with the left drill box:

3. Select one:
   (13) 195-063H LADDER MOUNT TOP WELDMENT LH, and four:
   (22) 802-030C RHSNB 7/16-14X1 3/4 GR5.

   Position top left-hand ladder mount (13) over the appropriate four walkboard holes (4).

   Insert the four bolts (22) to loosely hold the top ladder mount in place on the walkboard
4. Select one:
   (15) 195-340D LADDER MOUNT BOTTOM PLATE and four sets of:
   (35) 804-014C WASHER LOCK 7/16 PLT
   (27) 803-015C NUT HEX 7/16-14 PLT

   Position the bottom ladder mount plate (15) under the walkboard and inside the top ladder mount. Loosely hold it in place with the washers (35) and nuts (27).
5. Select two sets of:
   (21) 802-017C HHCS 3/8-16X1 GR5
   (34) 804-013C WASHER LOCK SPRING 3/8 PLT
   (28) 803-068C NUT HEX FLANGE 3/8-16 PLT

   Insert the bolts (21) through the side holes in both the top mount and bottom plate, and secure with lock washers (34) and flange nuts (28).

   Tighten the four nuts (27), securing the top mount to the bottom plate.
6. Select one:
   (14) 195-064H LADDER MOUNT TOP WELDMENT RH in place of left-hand mount. Repeat step 3 through step 5 for right wing section.

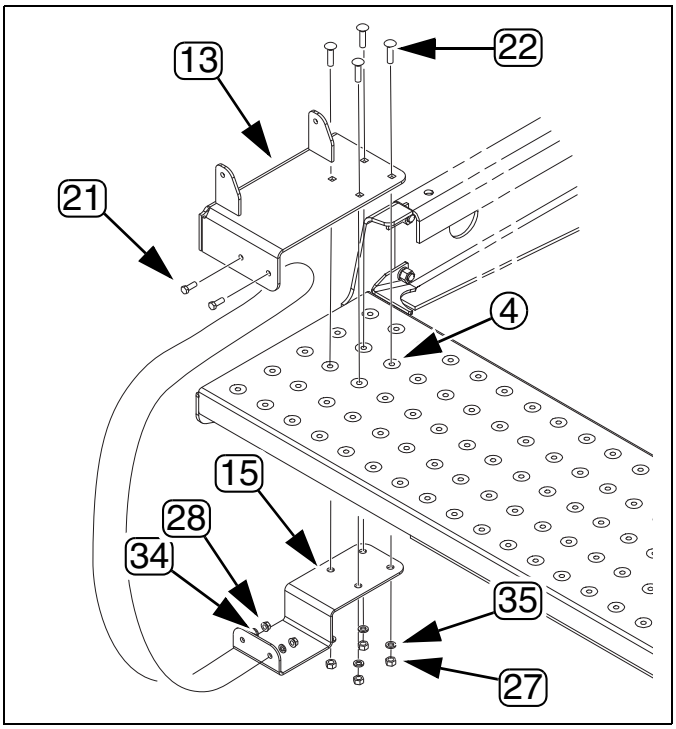

Figure 4 27036
Installation without Small Seeds Option

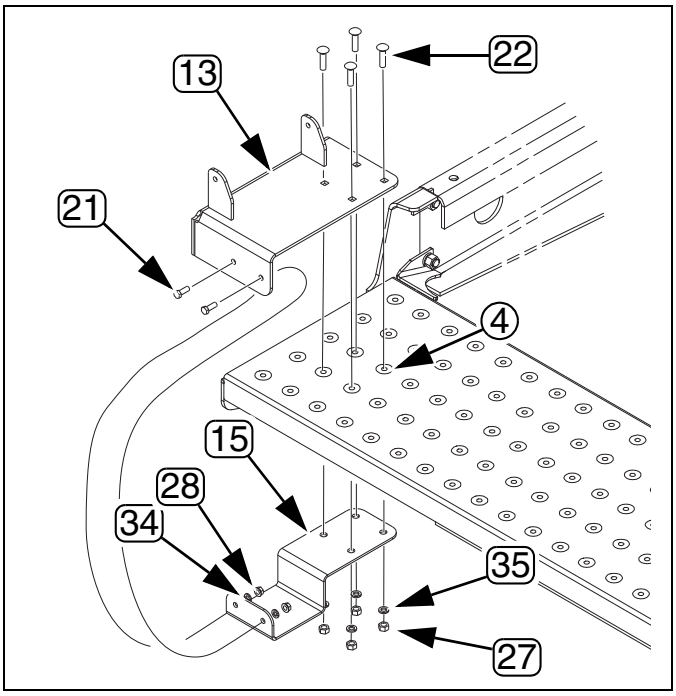

Figure 5 27055
Installation with Small Seeds Option

Install Ladders

The ladders mount between the lugs (5) of the upper mounts. Flat washers are placed between ladder side frame and the lugs. Hex head bolts install from the inside, to minimize obstructions to foot movement during climbing.

Refer to Figure 6
(which shows only the right side assembly, on a drill without Small Seeds)

Start with the right walkboard ladder:

7. Select one:
   (12) 195-062H LADDER WELDMENT 3-STEP NARROW

   Lay the ladder (12) on the walkboard with the swing holes up and near the top mount lug holes. Align the holes in the ladder in between the holes in the lugs.
8. Select two sets of:
   (23) 802-079C HHCS 3/8-16X1 1/4 GR5
   (36) 804-016C WASHER FLAT 1/2 SAE PLT
   (31) 803-209C NUT FLANGE LOCK 3/8-16 PLT

   Insert a bolt (23) through (in the following order):
   a. the ladder (12) side plate,
   b. a washer (36), and
   c. the mounting lug (5).
   Secure with lock nut (31).
9. Repeat step 7 and step 8 for left walkboard ladder.
10. Swing both ladders down to check operation and position for decal placement.

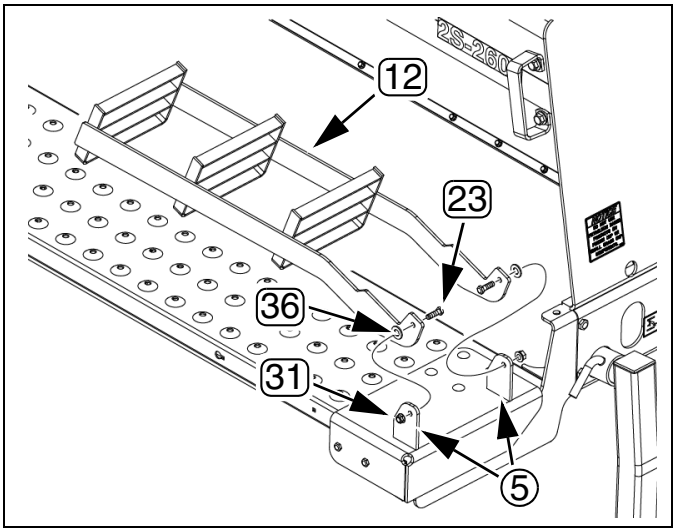

Figure 6
Ladder Installation

27037

Apply Reflectors and Decals

To prevent scuffing in shipment, walkboard reflectors and decals are shipped separate, and are applied after walkboard installation.

To install new reflectors and decals:

- Clean and dry the area where the reflector or decal is to be placed.
- Peel backing from reflector or decal. Press firmly on surface, being careful not to cause air bubbles under reflector or decal.

Walkboard Inside End Reflectors

Refer to Figure 7

Starting with the right walkboard, inside end:

1. Select two:
   (42) 838-266C DECAL REFLECTOR RED 2X9

   Place the red reflector (42) on the end face of the walkboard mounting bracket. Align the outside end of the reflector with the top corner. This reflector marks the left and right extents of the drill in transport (folded).

   Place another red reflector toward the front of the seed box (1) as shown.
2. Select one:
   (43) 838-267C DECAL REFLECTOR DAYTIME 2X9

   Place the daytime reflector (43) on the end face of the walkboard mounting bracket just below the red reflector.

   Place another daytime reflector below the red reflector at the front end of the seed box.
3. Select one:
   (16) 195-561D WALKBOARD REFLECTOR MNT SINGLE
   (41) 838-265C DECAL REFLECTOR AMBER 2X9
   and two sets of:
   (25) 802-633C RHSNB 1/4-20X5/8 PLT
   (26) 803-006C NUT HEX 1/4-20 PLT

   Install the reflector mount (16) using two bolts (25) and hex nuts (26) on the rear face of the walkboard.

   Place an amber reflector (41) on the reflector mount.
4. Repeat the procedure for the left walkboard.

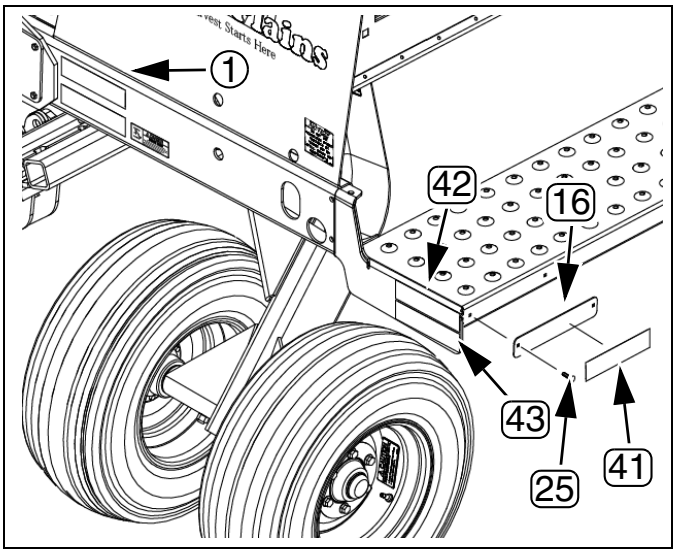

Figure 7 68426D
Walkboard Inside End Reflectors

Slow Moving Vehicle (SMV) Reflector

Refer to Figure 8.

5. Select one:
   (17) 195-562D 2600 SMV MOUNTING BRKT
   (37) 806-132C U-BOLT 3/8-16 X 3 1/32 X 2 3/4
   (29) 803-078C NUT LOCK 3/8-16 NYLON INSERT
   (38) 818-055C DECAL SLOW MOVING-GALV. BACKED
   and two sets of:
   (19) 801-018C SCREW RD HD 1/4-20 X 5/8
   (33) 804-007C WASHER FLAT 1/4 SAE PLT
   (32) 804-006C WASHER LOCK SPRING 1/4 PLT
   (26) 803-006C NUT HEX 1/4-20 PLT

   At the rear center of the mainframe, install the SMV mounting bracket (17) to the upper bar (2). Secure with the U-bolt (37) and lock nuts (29).

   Attach the slow moving vehicle reflector (38) to the bracket with two screws (19), flat washers (33), lock washers (32), and hex nuts (26).

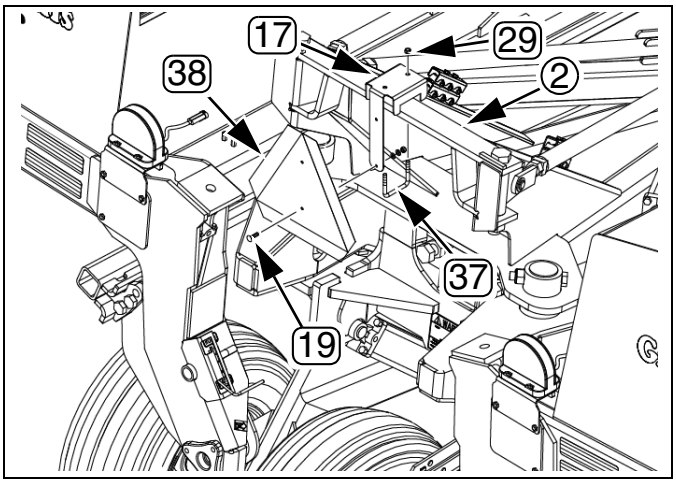

Figure 8 68426F
Slow Moving Vehicle Reflector

Ladder Reflectors and Decals

Refer to Figure 9

Starting on the right walkboard:

6. Select one:
   (16) 195-561D WALKBOARD REFLECTOR MNT SINGLE
   and two of:
   (41) 838-265C DECAL REFLECTOR AMBER 2X9
   (25) 802-633C RHSNB 1/4-20X5/8 PLT
   (26) 803-006C NUT HEX 1/4-20 PLT
   (40) 838-102C DECAL WARNING FALLING HAZARD (if separate)

   Place an amber reflector (41) on the outside face of the ladder mount, between the ladder side plates (2) (so it will not be damaged by ladder operation).

   Install a reflector mount (16) with two bolts (25) and hex nuts (26) on the rear face of the walkboard beside the ladder mount.

   Place an amber reflector (41) on the reflector mount.

   If the Warning decals (40) are separately provided, place in front of and near the top of the ladder, where they are visible to climbers.
7. Repeat the procedure for the left walkboard.

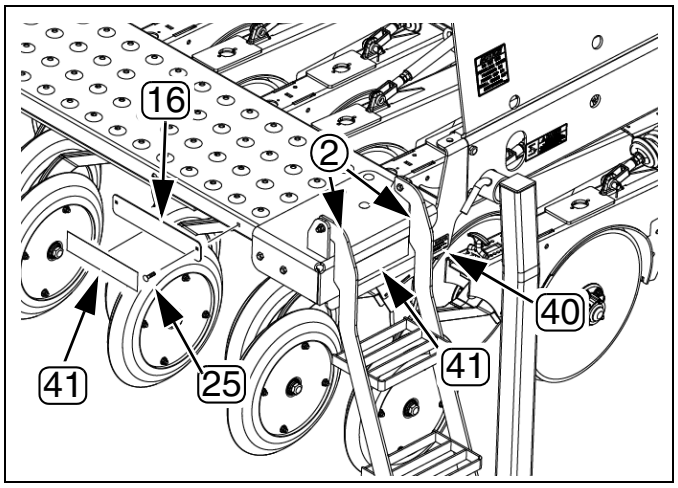

Figure 9 68426E
Ladder Reflectors and Decals

Handles and Lights

Install Box Handles

Refer to Figure 10

On outside ends of drill boxes, by the ladders, bolt handles to boxes. Secure with 1/2-13 x 1 1/2 inch bolts and lock nuts.

Figure 10 17347
Box Handle

Install Lights

Refer to Figure 11

The red lights will already be install on the drill at the front of each inside end of the drill boxes.

Starting on the right drill box:

1. Select one:
   (18) 195-563D 2600 SIDE LIGHT BRKT
   (39) 833-697C LIGHT, AMBER LAMP LED
   and two sets of:
   (24) 802-203C HFSS 1/2-13X1 1/2 GR5
   (30) 803-169C NUT HEX FLG LOCK 1/2-13 PLT
   (20) 801-081C SCREW HEX SELF TAP 1/4-20X3/4

   At the rear of the inside end of the drill box, install an amber light bracket (18) with two bolts (24) and lock nuts (30).

   Install an amber light (39) to the bracket using two screws (20).
2. Plug the amber light lead into the drill harness.
3. Repeat the procedure for the left drill box.

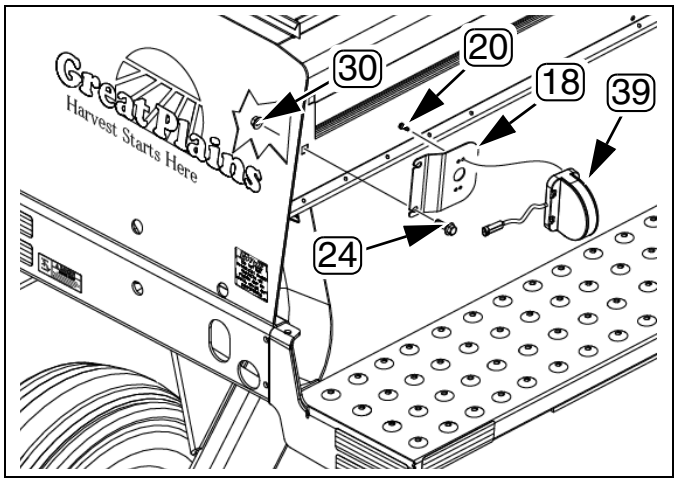

Figure 11 17346
Amber Light Installation

Other Assembly Items

There are a few additional standard components, and several possible optional items, that are not factory installed. Some of these, which follow in this chapter, need to be installed prior to first hydraulic hookup. Others are installed after hookup, bleeding and leveling. See "**Install Final Accessories**" on page 24.

Two Outlet Kit

If the two-outlet hydraulic kit was ordered, install it now (before the markers, as this kit contains items needed when both 2-outlet and markers are installed).

Installation instructions are provided in a separate manual with the two-outlet hydraulic kit.

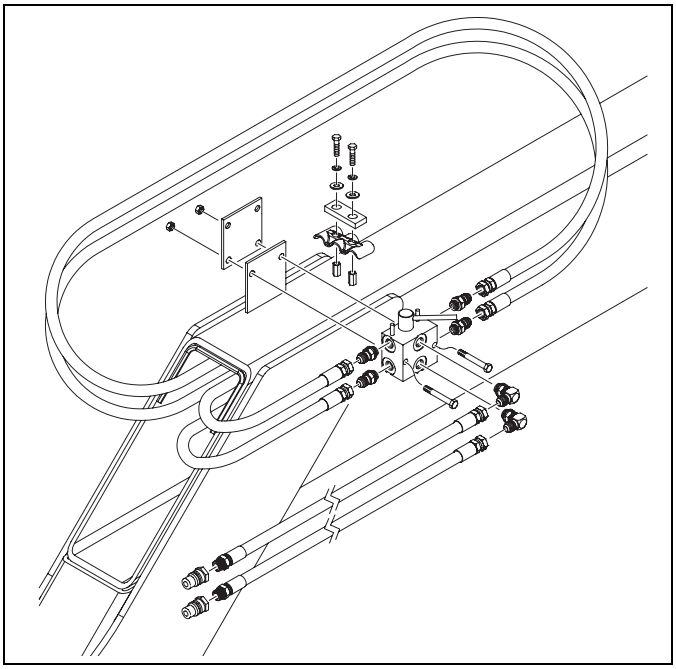

Figure 12 27020
Two-Outlet Selector

Point Row Option

If the point row option was ordered with the drill, the hydraulics and drill electrical lead are factory-installed.

If the customer's primary tractor is available, install the control module in the tractor cable and make the electrical connection. Consult the point row installation manual provided.

If the primary tractor is not available, temporarily connect the control module so that openers can be operated during Setup.

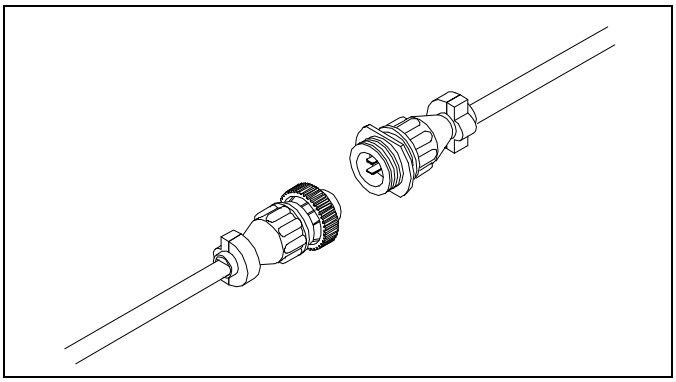

Figure 13
Point-Row Connector

26469

Post Assembly Checklist

- ❑ Check that all working parts are moving freely, bolts are tight, and cotter pins are spread.
- ❑ Check for proper tension and alignment on all drive chains.
- ❑ Check that all safety decals and reflectors are located correctly and are legible. Replace if improperly located or damaged. Refer to "**Safety Decals**" in the Operator's manual.
- ❑ Inflate tires to recommended pressures as listed on the "**Tire Inflation Chart**" on page 27. Tighten wheel bolts as specified on "**Torque Values Chart**" on page 28.

Setup

The Assembly steps of the preceding chapter must be completed prior to setup.

Setup steps consist of:

1. Hitch to suitable tractor.
2. Connect hydraulics.
3. Bleed hydraulics.
4. Level drill.
5. Install any accessories and options not factory-installed, which can or must be deferred until after first unfolding.

Hitching

DANGER

You may be severely injured or killed by being crushed between the tractor and drill. Do not stand or place any part of your body between machines being hitched. Stop tractor engine and set park brake before installing hitch pins.

WARNING

This drill can have positive and negative tongue weight, which can work the hitch pin loose during transport. To avoid serious injury or death due to a road accident, always use a clevis hitch or clevis drawbar with a locking-style hitch pin.

Choose a drill-hitch option that is compatible with your tractor drawbar.

Refer to Figure 14

The 2S-2600HD has three hitch options:

- a clevis hitch,
- a small-hole, single-strap hitch or;
- a large-hole, single-strap hitch.

Use the clevis hitch with tractors that have single-tang drawbars. Use the single-strap hitch for tractors with clevis drawbars. Always use a locking-style hitch pin sized to match the holes in the hitch and drawbar.

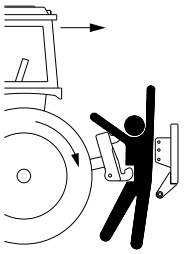

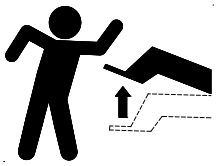

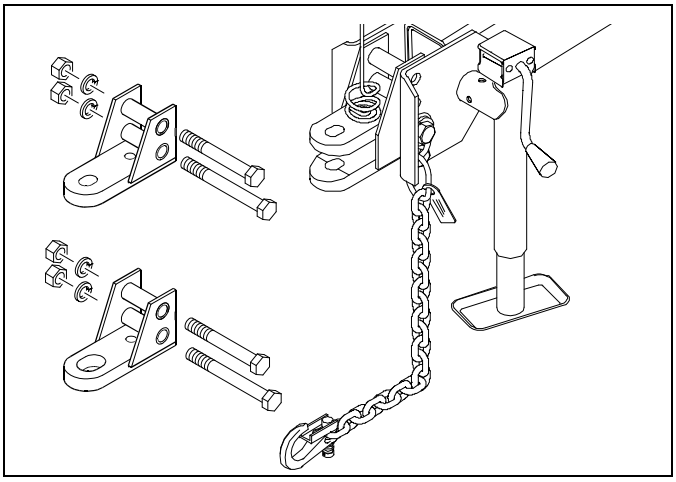

Figure 14
Hitch Options

27006

Refer to Figure 15 and Figure 16

To adjust the drill hitch to match your tractor-drawbar height, mount tongue jack on side of tongue. Use jack to raise drill tongue so lowest hitch hole is 18 inches (45.7cm) above ground level with drill lowered to FIELD position.

Refer to Figure 16

Bolt drill hitch onto drill tongue to match your tractor-drawbar height. You can turn the hitch over for a total of six different hitch heights. Always have two (2) bolts in two holes of both tongue and hitch.

NOTE:
When hitching drill to a different tractor, check for a difference in drawbar heights. If heights are different, readjust hitch height accordingly.

Securely attach safety chain to an anchor on a tractor capable of pulling the drill.

Figure 15 15564
Jack in Lifting Location

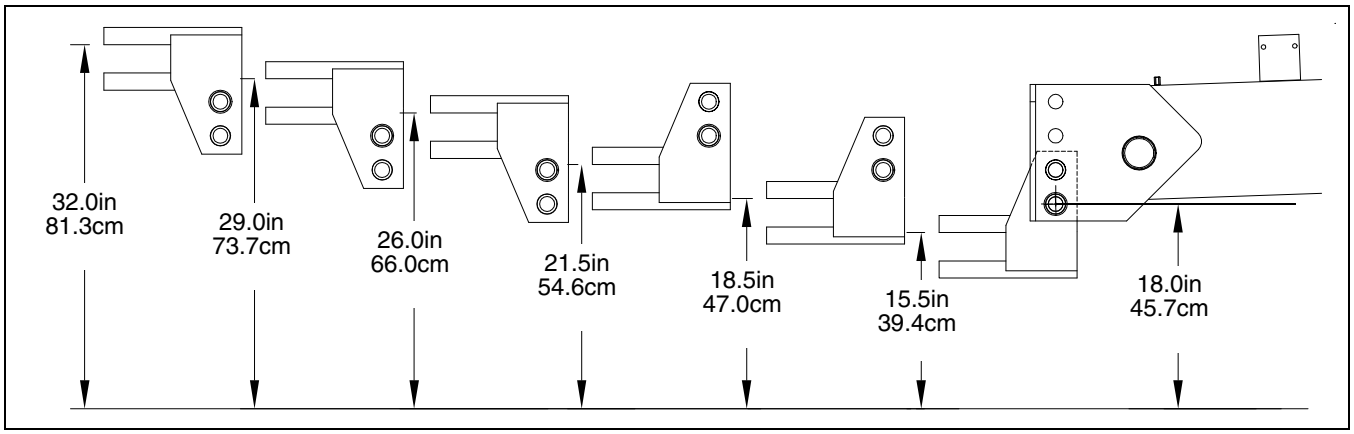

Figure 16 15623
Heights for Various Hitch Positions - Correct Tongue Height

Refer to Figure 17

Use crank to raise jack foot. Remove pin and jack. Store jack on top of tongue.

Figure 17 15563
Jack in Storage Location

Electrical Connections

Refer to Figure 18

Plug drill electrical lead into tractor seven-pin connector.

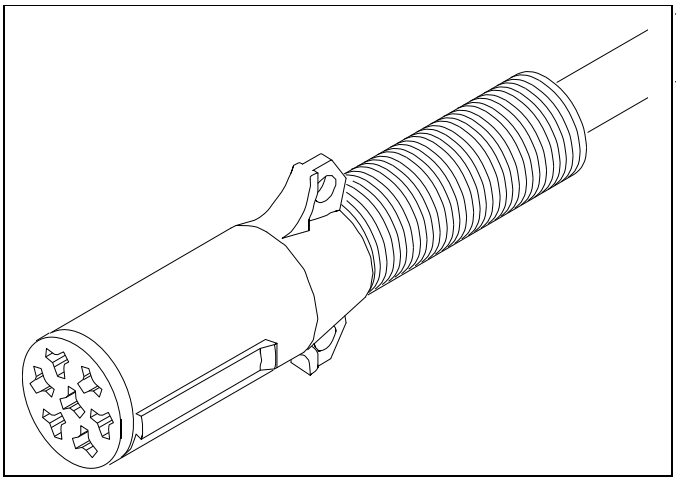

Figure 18 26467
Lighting Connector

Refer to Figure 19

If the drill is equipped with the point row option, mate the connector for the cab control.

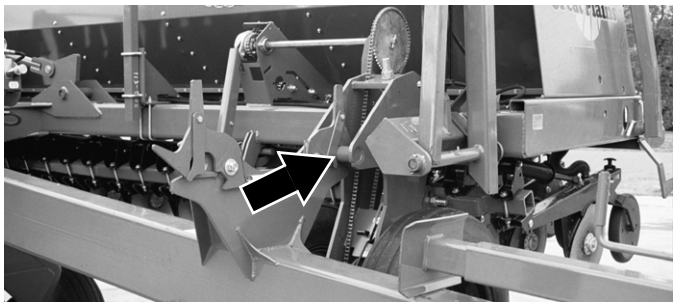

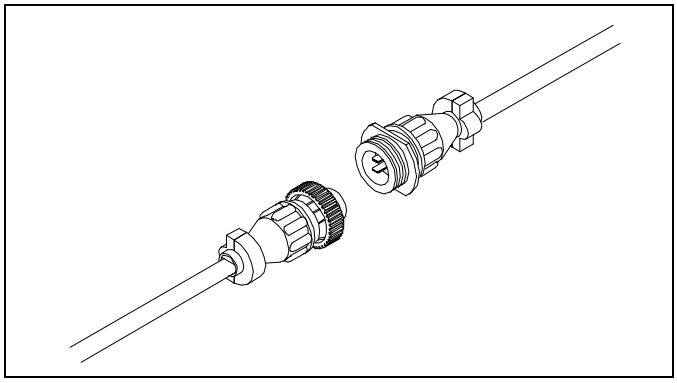

Figure 19 26469
Point-Row Connector

Hydraulic Hose Hookup

WARNING

Only trained personnel should work on system hydraulics!

Escaping fluid under pressure can have sufficient pressure to penetrate the skin, causing serious injury. Avoid the hazard by relieving pressure before disconnecting hydraulic lines. Use a piece of paper or cardboard, NOT BODY PARTS, to check for leaks. Wear protective gloves and safety glasses or goggles when working with hydraulic systems. If an accident occurs, see a doctor immediately. Any fluid injected into the skin must be surgically removed within a few hours or gangrene will result.

Refer to Figure 20

Great Plains hydraulic hoses are color coded handle grips to help you hookup hoses to your tractor outlets. Hoses that go to the same remote valve are marked with the same color.

Current Style Color Coded Hose Handles

Color	Hydraulic Function
Red	Opener Lift Cylinders
Blue	Transport Lift Cylinders
Gray	Fold Cylinders
Green	Marker Cylinders

To distinguish hoses on the same hydraulic circuit, refer to the symbol molded into the handle grip. Hoses with an extended-cylinder symbol feed cylinder base ends. Hoses with a retracted-cylinder symbol feed cylinder rod ends.

1. Connect opener-lift hoses to circuit designated for hydraulic-motor control.
2. Connect transport-lift hoses to tractor remote valve.
3. Connect fold hoses to tractor remote valve.
4. Connect marker hoses to tractor remote valve.

NOTE:
If your tractor has only two remote valves, you must install a double-selector valve to combine the transport-lift and opener-lift circuits. See "**Two Outlet Kit**" on page 11.

Hydraulic Operations

Consult the Operator's Manual for unfolding and lowering instructions. Pay strict attention to the step ordering.

NOTICE

Both Opener and Transport Lift circuits must be raised and locked up before folding, or implement damage will result.

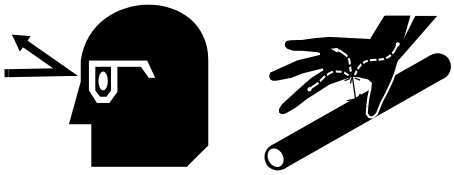

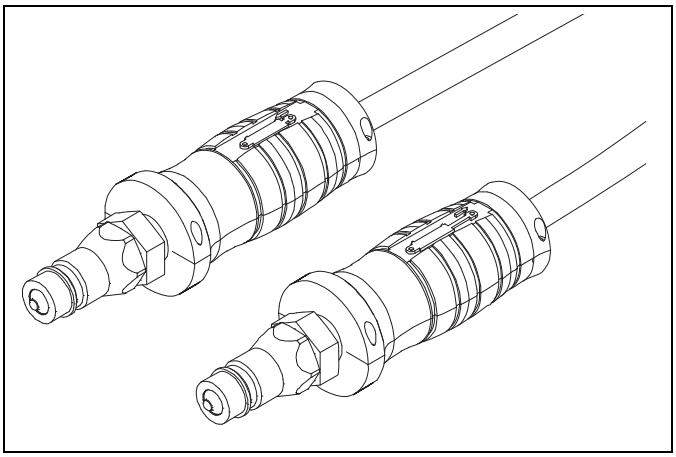

Figure 20 31733
Plastic Hose Label

NOTICE

To run drill on tractors with open-center hydraulics or on tractors with fixed-displacement hydraulic pumps, you must install a Great Plains kit, part number 194-143A. If you are not familiar with your tractor hydraulics, consult your tractor dealer.

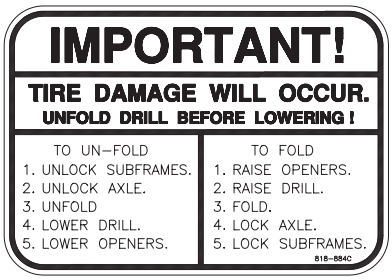

Bleeding Hydraulics

To function properly, the hydraulics must be free of air. If hydraulics have not been bled, they will operate with jerky, uneven motions and could cause wings to drop rapidly during folding or unfolding. If hydraulics were not bled during initial implement setup or if you replace a part in hydraulic system during the life of the drill, complete the following procedures.

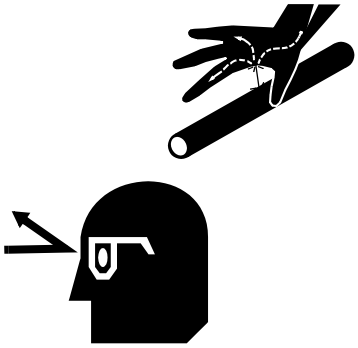

WARNING

Escaping fluid under pressure can penetrate the skin causing serious injury. Avoid the hazard by relieving pressure before disconnecting hydraulic lines. Use a piece of paper or cardboard, NOT BODY PARTS, to check for suspected leaks. Wear protective gloves and safety glasses or goggles when working with hydraulic systems. If an accident occurs, see a doctor immediately. Any fluid injected into the skin must be surgically removed within a few hours or gangrene may result.

WARNING

Raising openers on unfolded, unhitched drill will cause drill tongue to rise suddenly, which could cause serious injury or death. Be certain that drill is hitched securely to your tractor drawbar and the safety chain is securely attached to tractor before raising openers and unfolding drill.

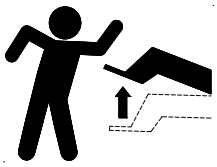

NOTICE

Bleed only at:
JIC (Joint Industry Conference, 37° flare) or
NPT (National Pipe Thread, tapered thread) fittings.
Never bleed at:
ORB (O-Ring Boss) or
QD (Quick Disconnect) fittings.

Check hydraulic fluid level in tractor reservoir and fill to proper level. Add fluid to system as needed.

NOTE:
System capacity for entire drill is about $4\frac{1}{2}$ U.S. gallons (17 liters).

Bleeding Opener Lift Hydraulics

Refer to Figure 23

1. Review warnings, bleeding notes and system information on page 17.
2. Make sure opener frames are locked up in ROAD position. Refer to Opener Lock Up in Operator's Manual.
3. Turn knob on both pressure-control valves (1) completely counterclockwise, then turn valves clockwise far enough to build up 1000 psi (about three turns).
4. Turn knob on bypass valve (2) completely clockwise for no oil flow.
5. Loosen two hose-end JIC fittings (3) on the opener-lift circuit where these center two hoses tee at the middle of the mainframe.
6. Slowly supply oil to top side of pressure-control valves until oil begins to appear at a loosened hose fitting. As oil begins to appear at a fitting, tighten that fitting.
7. Slowly supply oil to bottom side of pressure-control valves until oil begins to appear at remaining loosened hose fitting. As oil begins to appear at the fitting, tighten fitting. Continue to supply oil to bottom side of pressure-control valves until all openers are raised completely.
8. Move opener transport locks to FIELD position and cycle openers up and down ten times. Each time you lower openers, hold tractor remote lever until opener circuit builds up to pressure set at control valves.
9. After cycling openers, return opener transport locks to ROAD position, and lock openers up.

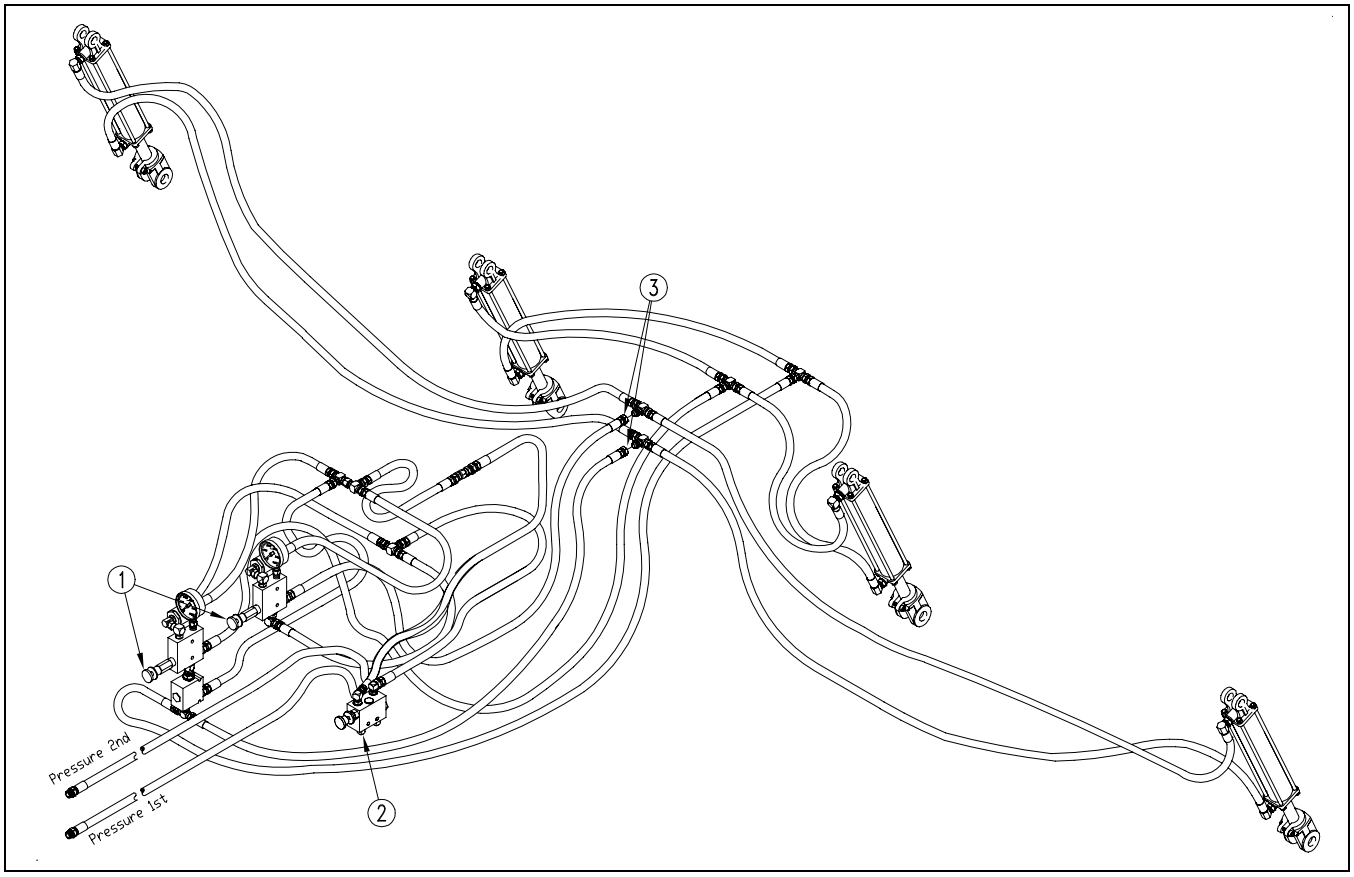

Figure 21
Bleeding Opener Lift Hydraulics

22981

Bleeding Fold Hydraulics

Refer to Figure 21

1. Review warnings, bleeding notes and system information on page 17.
2. With drill unfolded and fold cylinders completely extended, disconnect rod end pins and swing the cylinders so they will not contact anything when extended.
3. Loosen rod end hose JIC fitting (1) at elbow on left fold cylinder.
4. Slowly supply oil to rod end of fold cylinders (line noted as “Pressure 1st”) until oil appears at loosened hose fitting. Tighten fitting and completely retract fold cylinders.
5. With cylinders completely retracted, loosen base end hose JIC fitting (2) at elbow on left fold cylinder.
6. Slowly supply oil to base end of fold cylinders (line noted as “Pressure 2nd”) until oil appears at loosened hose fitting. Tighten base end hose fitting and cycle fold cylinders in and out several times.
7. Re-pin cylinder rod clevis.

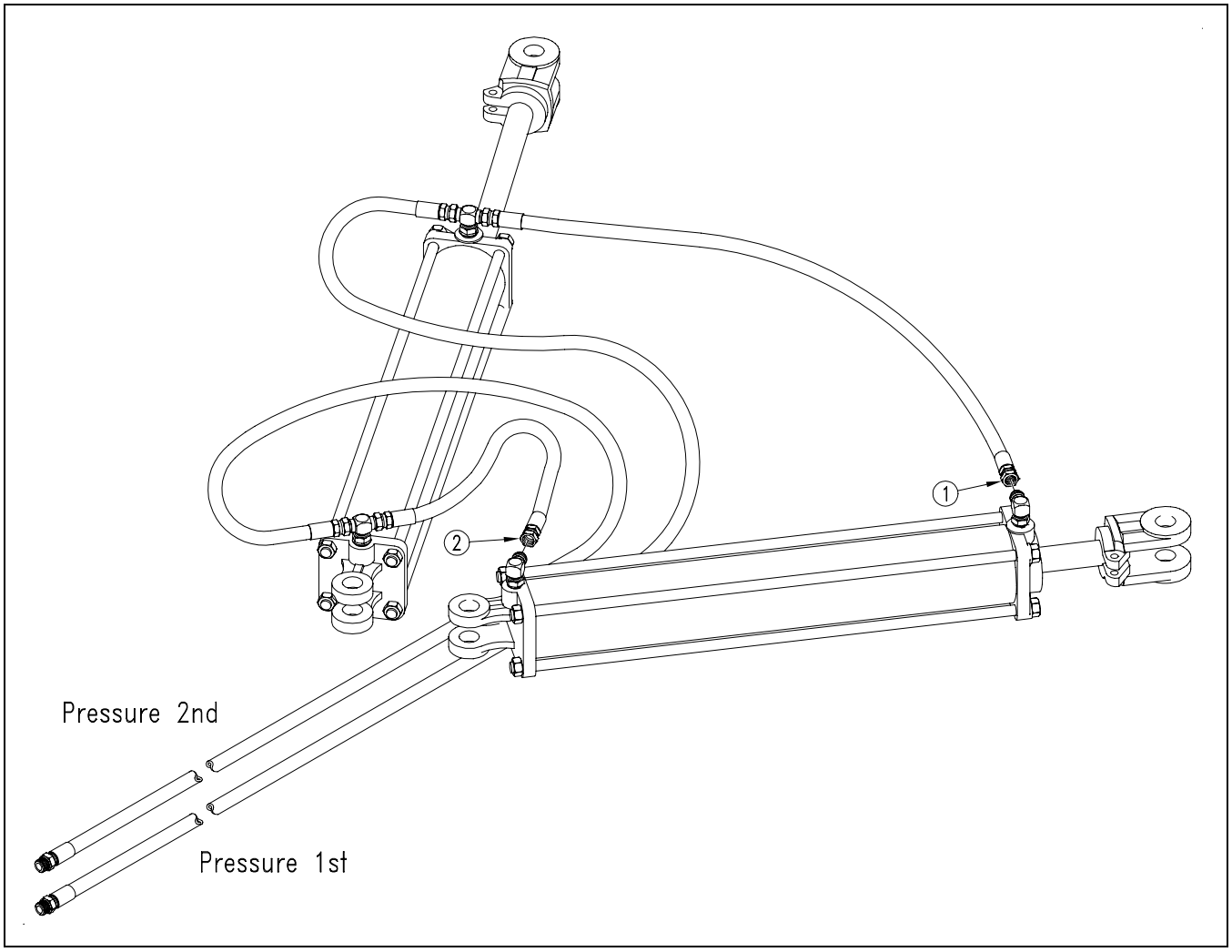

Figure 22
Bleeding Fold Hydraulics

17299

Bleeding Transport Lift Hydraulics

Refer to Figure 23

1. Review warnings, bleeding notes and system information on page 17.
2. With drill lowered into field position, loosen base-end-hose fitting at elbow on right-hand transport-lift cylinder (1).
3. Slowly supply oil to base end of transport-lift cylinders until oil appears at the loosened hose fitting. As oil appears at fitting, tighten that fitting.
4. Completely extend transport-lift cylinders and immediately lock cylinders up by flipping up cylinder lock channels on both transport-lift cylinders. See "**Raising Drill (Transport Lift)**" in Operator's Manual.

WARNING

The hydraulics could fail, causing the openers to fall and crush you. To prevent serious injury or death, always secure cylinder lock channels over extended transport-lift cylinders before working under openers.

5. When cylinder lock channels are in place, loosen rod-end-hose fitting at elbow on left transport-lift cylinder (2).
6. Slowly supply oil to rod end of transport-lift cylinders until oil appears at loosened hose fitting. As oil begins to appear at fitting, tighten that fitting.
7. Extend transport-lift cylinders and remove cylinder lock channels. Completely cycle transport-lift hydraulics several times.

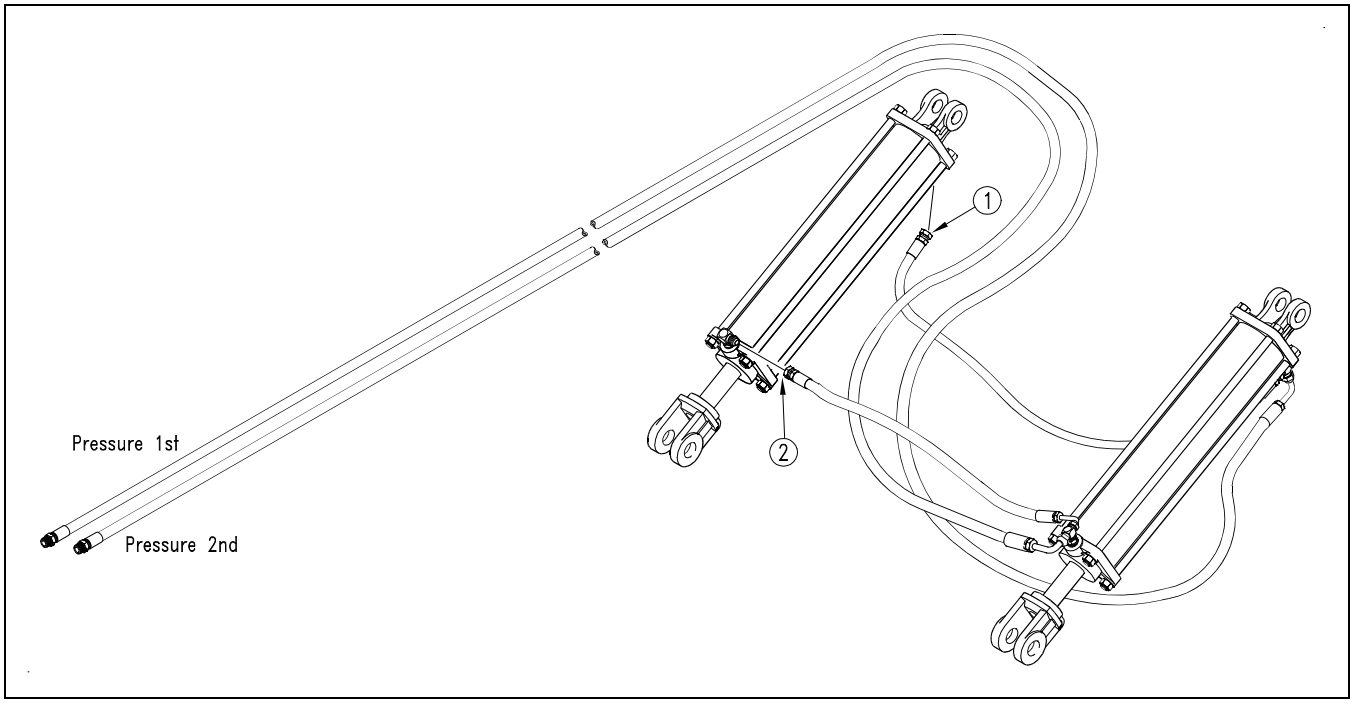

Figure 23
Bleeding Opener Lift Hydraulics

17298

Leveling the Drill

To perform leveling, the drill must be hitched to a tractor, with at least the hydraulics connected.

⚠ WARNING

Raising openers on unfolded, unhitched drill will cause drill tongue to rise suddenly, which could cause serious injury or death. Be certain that drill is hitched securely to your tractor drawbar and the safety chain is securely attached to tractor before raising openers and unfolding drill.

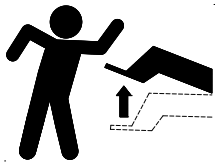

Opener Frames Level

Refer to Figure 24

Check that opener frames are level across drill. When openers are fully raised, top of opener mounts (1) should clear bottom of drill frame tube by at least ½in (1.3cm).

To adjust opener frames so all openers have same clearance, loosen jam nut (2) on opener-lift cylinders and turn adjustment nut (3). When openers are at correct height, retighten jam nut. Repeat at each opener-lift cylinder if necessary.

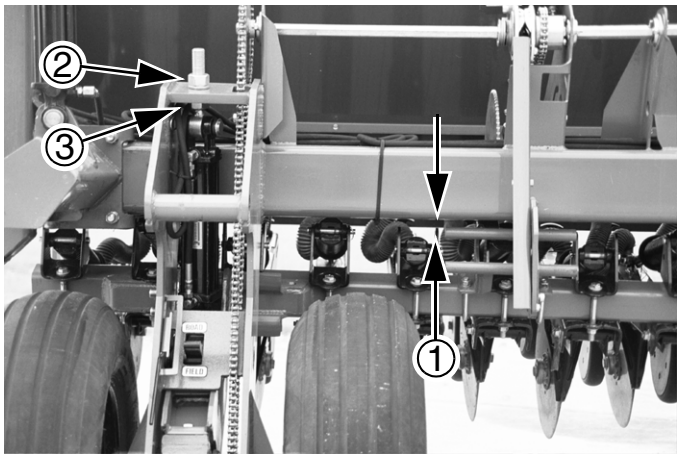

Figure 24 17308
Eyebolt Adjustment

Link Tube

Refer to Figure 25

The link tube controls folding height of outer end of drill box. If a drill box does not catch in folding latch when folding, adjust link length to lower or raise end of box.

1. Unfold and lower drill.
2. Pull upper pin (1) from link clevis (3).
3. Unlock jam nut (2).
4. Thread clevis in or out to lengthen or shorten link.
5. Replace pin and tighten nut.

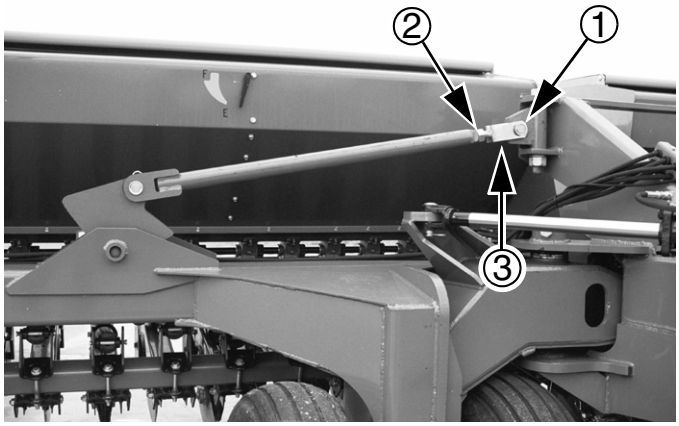

Figure 25 17307
Link Tube Adjustment

Toolbar Height

Refer to Figure 26

Toolbar height (1) above ground level (2) is factory set and normally does not require adjustment. If you tear down the drill for repair, or if the tool bar is visibly not level, spacer washers (3) on vertical pivot pins allow for a small amount of tool bar-height adjustment.

To check tool bar height, park drill on a level surface, and check for correct tire inflation. Measure from ground to horizontal pivot pin (1). If dimension on either side of drill varies more than ¼ inch (6.4mm), adjust tool bar height.

To adjust tool bar height, reposition spacer washers (3). First lower openers and set enough opener down pressure to help balance frame. Raise tool bar by removing spacer washers from top of the vertical pivot and placing them on bottom side of pivot. Lower tool bar by removing spacer washers from bottom of vertical pivot and placing them on top of pivot.

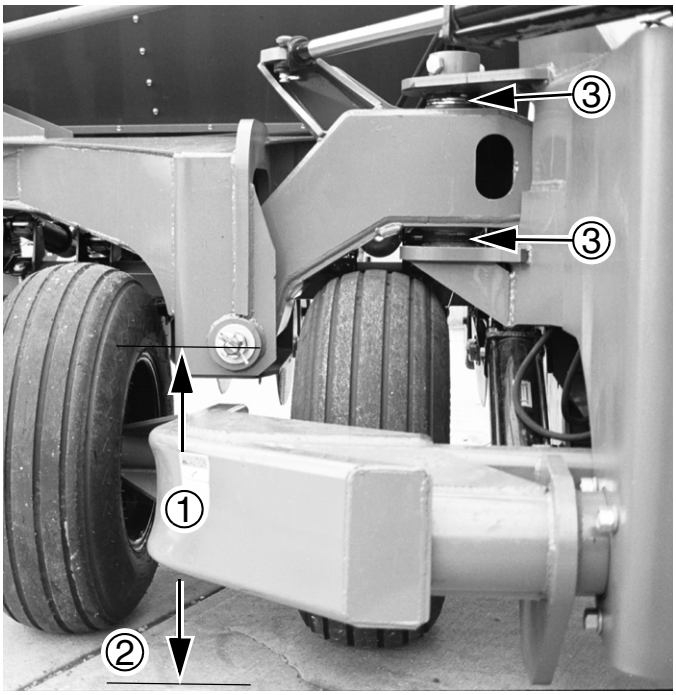

Figure 26
Toolbar Height

17306

Wing Box Alignment

1. Place a block ahead of the wing gauge wheels.

Refer to Figure 27

2. Pull forward against blocks to rock wing frames back. Pull forward until stop bolts (1) are firmly against toolbars.

Refer to Figure 28

3. Check for proper alignment by running a string line across back of drill toward outer ends of wings.
4. For proper alignment, outside ends of boxes (A) should be about 1in (2.5cm) ahead of inside ends (B).
5. To adjust box alignment, shorten or lengthen stop bolts (1) to change the contact point with the toolbars. Loosen jam nut and thread stop bolt in or out. Adjust stop bolts in or out until outside ends of boxes are 1in (2.5cm) ahead of inside ends.
6. Tighten jam nut.

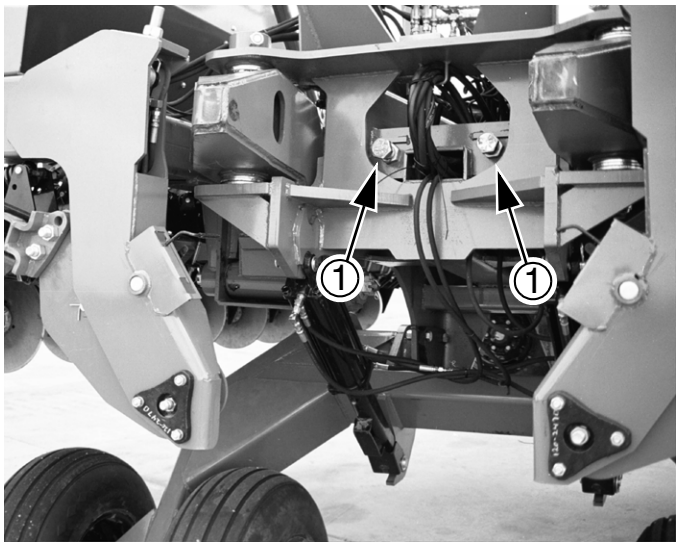

Figure 27
Stop Bolts (Wings Folded)

17357

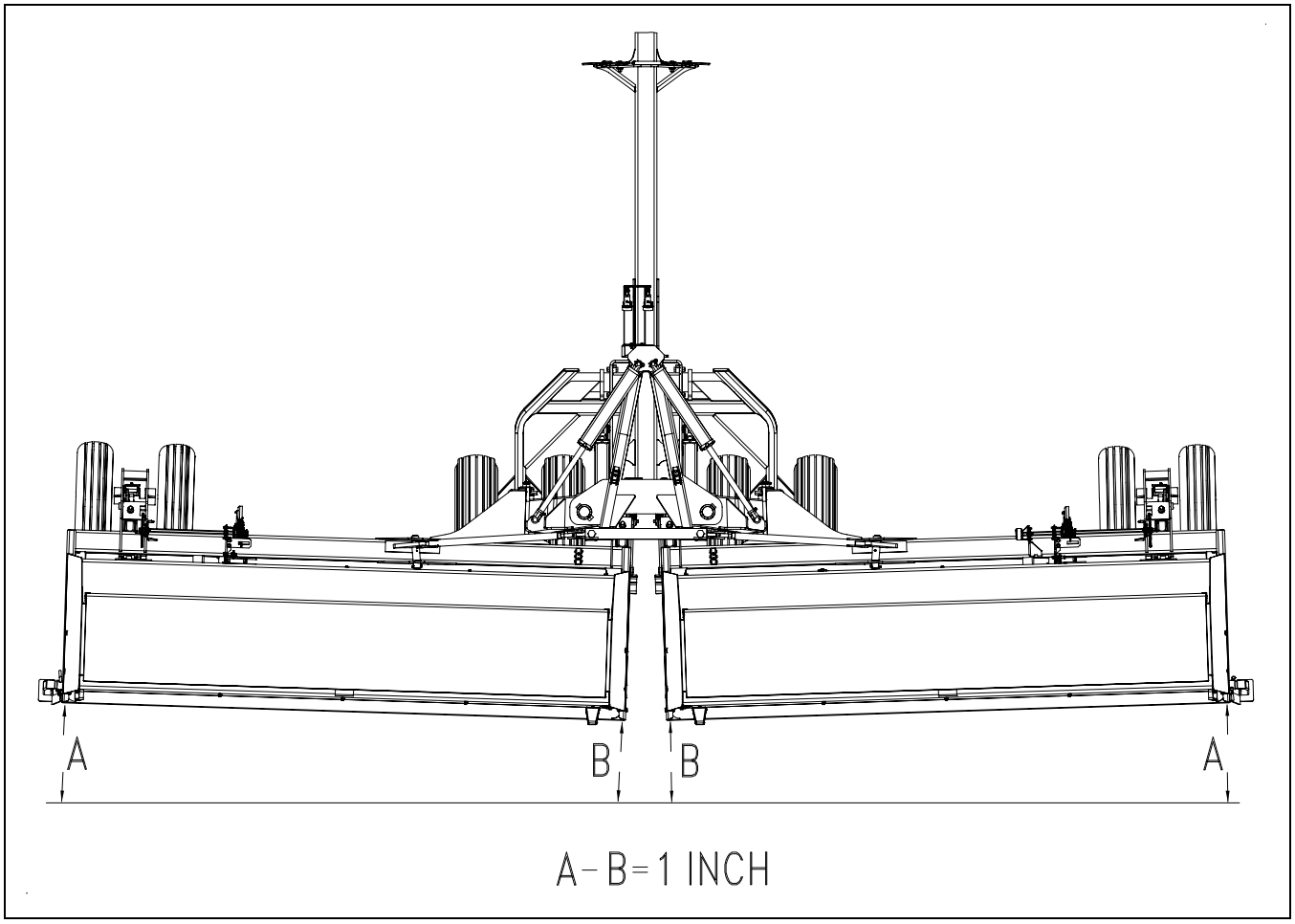

Figure 28
Wing Box Alignment Measurement

17300

Install Final Accessories

Acremeter Installation

Refer to Figure 29

The acremeter (1) is supplied from the factory in a separate carton, to minimize risk of shipping damage. It is installed on the left end of the left drive shaft.

Screw the threaded end of the meter into the ½-20 tapped hole (2) in the left end of center main drive shaft.

Tighten the threaded end only enough to prevent it from working loose from normal vibration. In use, there is no torque or tension that might tend to unscrew it.

The acremeter counts shaft rotations whenever the shaft is rotating - normally this is only with the drill unfolded, the opener sub-frame lowered, and the drill in motion. The meter is geared to display rotations as acres, when using factory-specified tires and inflations.

Tally field acres by noting the meter reading prior to, and after planting. Subtract the starting from the ending readings.

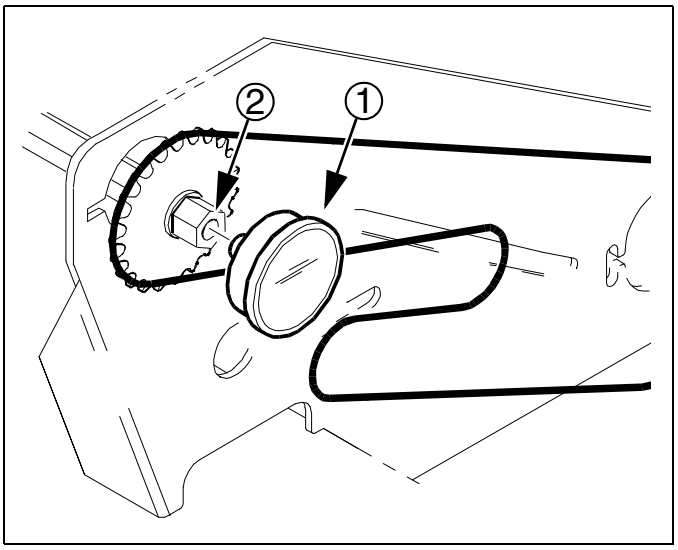

Figure 29 27000
Acremeter Installation

Open Center Conversion

If the drill was shipped with an Open Center kit, it is not factory-installed. Install it now. An installation manual is provided.

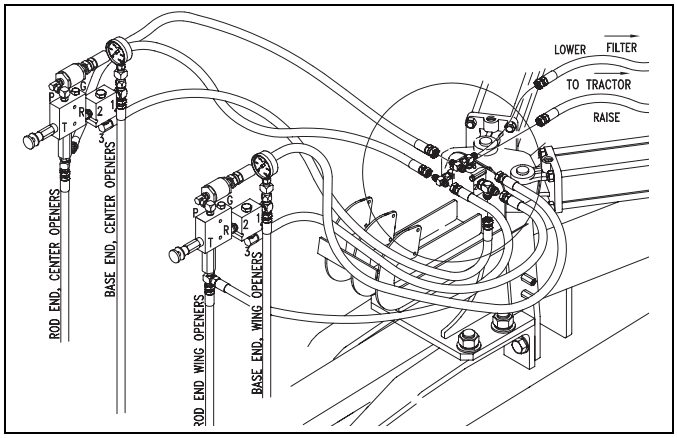

Figure 30 18750
Open Center Conversion

Markers

Markers are not factory-installed, due to vertical clearance requirements during shipment. An installation manual is provided, but does not include details for installation where a Two-Outlet Kit is also present. If a Two-Outlet kit is installed, observe these tips:

- The Marker/Fold valve mounts on the second valve bracket.
- Use the longer bolts in the Two-Outlet kit to stack the hose clamps. Place the clamp hold-down on the top clamp.
- For consistency of operation, be sure to plumb the Fold circuit to the forward ports of the Marker/Fold valve, and plumb the Marker circuits to the rear. Handle forward is then Transport operations (Fold), and handle back is then Field operations (Marker).

Consult the drill Operator's manual for setting initial marker extension length, and the latest information on chain length and stop bolt adjustment.

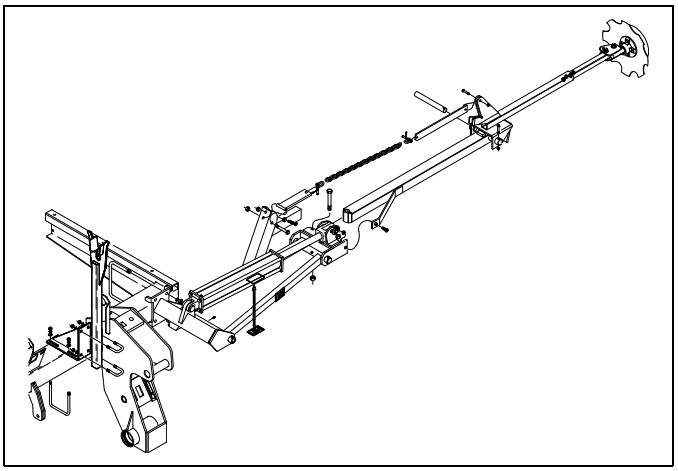

Figure 31
Marker
26493

Bleeding Marker Hydraulics

CAUTION

You may be injured if hit by a folding or unfolding marker. Markers may fall quickly and unexpectedly if the hydraulics fail. Never allow anyone near the drill when folding or unfolding markers.

1. Review warnings, bleeding notes and system information on page 17.

Refer to Figure 32

2. With markers unfolded in field position, crack hydraulic-hose JIC fittings (1) at base and rod ends of each marker cylinder.
3. With tractor at idle speed, activate tractor hydraulic valve forward until oil appears at a fitting. When oil begins to seep out around a fitting, tighten that fitting. Reverse the tractor hydraulic valve until oil appears at opposite hose fitting. Tighten that fitting.
4. If you have dual markers, activate tractor hydraulic valve forward again until oil seeps out around a fitting on the other marker cylinder. Tighten that fitting. Reverse tractor hydraulic valve until oil seeps out around remaining hose fitting and tighten it.
5. Fold and unfold markers slowly to work out all air.

NOTE:
Use caution when folding and unfolding markers for the first time, checking for pinching and kinking of hoses.

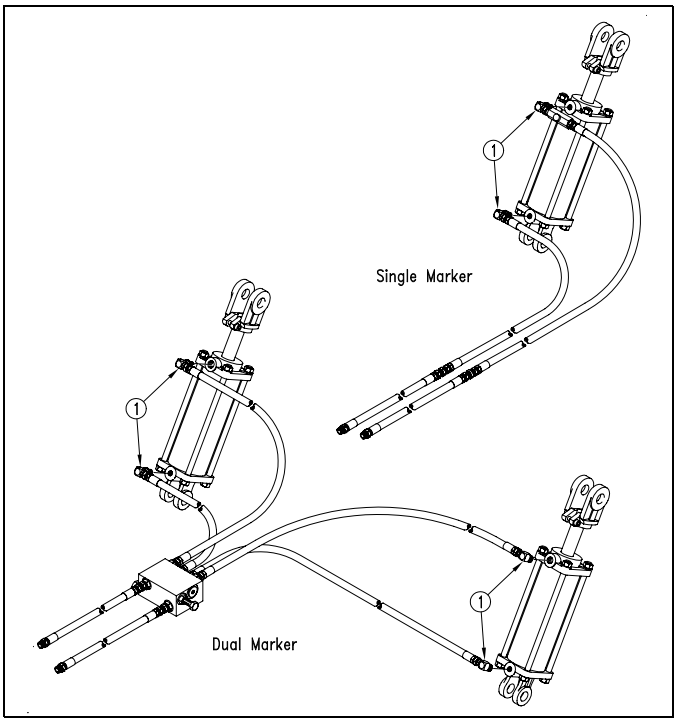

Figure 32
Bleeding Marker Hydraulics
18942

Shaft Monitor

Refer to Figure 33

If the drill was ordered with the optional shaft monitor, install the sensors and leads per the included installation manual.

If the primary tractor is available, also install the display console in the cab.

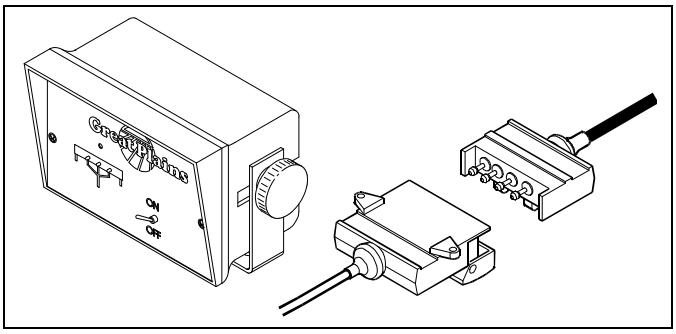

Figure 33
Shaft Monitor

18943
26468

Scraper Installation

1. Remove one or both disk blades to gain safe access to the mount. Note the position of bushings and spacers for correct re-assembly.

Refer to Figure 34

2. Position the inside scraper mount (1) to the rear of the seed firmer mount (2) on the opener weldment.

   Secure it with two $^{3}/_{8}$-16 x 1 inch hex head bolts, lock washers and nuts. Insert the bolts from the front.

3. Position the scraper blade (3) below and behind the inside scraper mount (1), with the notch on top to machine right.

   Secure it loosely with one $^{3}/_{8}$-16 x 1 inch round head square neck bolt, flat washer, lock washer and nut.

4. Re-mount the removed disk blade.

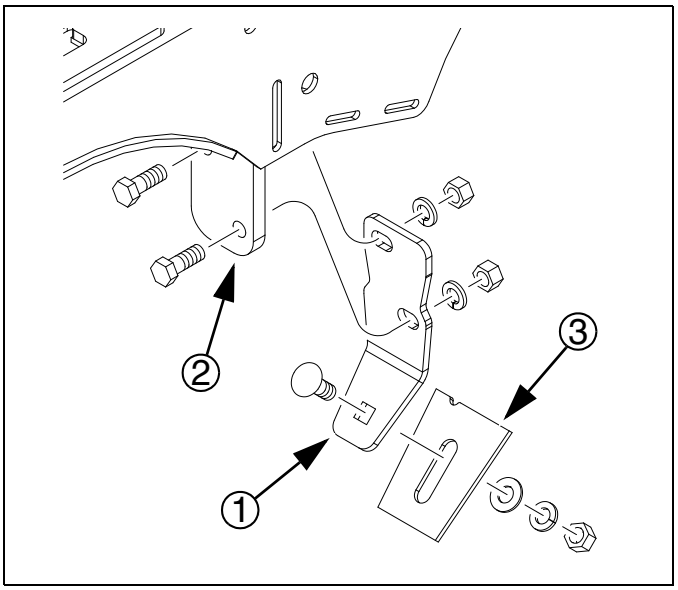

Figure 34
Scraper Installation

26460

Appendix

Specifications and Capacities

	2S-2600HD-5206	2S-2600HD-4275	2S-2600HD-3210
Row Count	52	42	32
Row Spacing	6 in (15.4 cm)	7.5 in (19.1 cm)	10 in (25.4 cm)
Main Seed Box Capacity	86.4 bushels (3045 liters)		
Tractor Requirements	110 hp minimum		
Weight, standard HD model*	12,435 lbs (5640 kg)	11760 lbs (5334 kg)	11,085 lbs (5028 kg)
Down-Force per Row	130-217 lbs (59-98 kg)	135-266 lbs (61-121 kg)	144-318 lbs (65-144 kg)
Opener Travel	8in (20cm)		
Hydraulic Circuits	3 circuits required, load-sensitive or closed-center 15 to 30 gpm at 2300 psi Optional kits are available for two-circuit, and open center.		
Hitch Load	3700 lbs (1678 kg) folded with seed loaded Caution: *negative tongue weight when raised and unfolded*		
Transport Width	15 feet (4.57m)		
Operating Width	26 ft 2 in (7.97m)	26 ft 4 in (8.02m)	26 ft 10 in (8.18m)
Swath (Span plus one row space)	314.5 in (812.8cm)	316.0 in (802.6cm)	320 in (812.8 cm)
Height	8 feet 1.5 inches (248 cm)		
Field Length	27 ft 6 in (8.38m)		
Transport Length	22 ft 7 in (6.88m)		
Tire Sizes	Gauge Wheels: 9.5Lx15 6-ply Rib Implement rib implement 6-bolt rim Transport: 11Lx15 12-ply Rib Implement rib implement 6-bolt rim		

*. See Operator's Manual for additional weight data.

Tire Inflation Chart

Tire Size	Inflation
9.5Lx15 6-ply Rib Implement	32 psi 221 kPa
11Lx15 12-ply Rib Implement	52 psi 359 kPa

Tire Warranty Information

All tires are warranted by the original manufacturer of the tire. Tire warranty information is found online at the manufacturer's websites listed below. For assistance or information, contact your nearest Authorized Farm Tire Retailer.

Manufacturer	Website
Firestone	www.firestoneag.com
Gleason	www.gleasonwheel.com
Titan	www.titan-intl.com

Torque Values Chart

Bolt Size	Bolt Head Identification					
	Grade 2		Grade 5		Grade 8	
in-tpi[a]	N-m[b]	ft-lb[d]	N-m	ft-lb	N-m	ft-lb
1/4-20	7.4	5.6	11	8	16	12
1/4-28	8.5	6	13	10	18	14
5/16-18	15	11	24	17	33	25
5/16-24	17	13	26	19	37	27
3/8-16	27	20	42	31	59	44
3/8-24	31	22	47	35	67	49
7/16-14	43	32	67	49	95	70
7/16-20	49	36	75	55	105	78
1/2-13	66	49	105	76	145	105
1/2-20	75	55	115	85	165	120
9/16-12	95	70	150	110	210	155
9/16-18	105	79	165	120	235	170
5/8-11	130	97	205	150	285	210
5/8-18	150	110	230	170	325	240
3/4-10	235	170	360	265	510	375
3/4-16	260	190	405	295	570	420
7/8-9	225	165	585	430	820	605
7/8-14	250	185	640	475	905	670
1-8	340	250	875	645	1230	910
1-12	370	275	955	705	1350	995
1 1/8-7	480	355	1080	795	1750	1290
1 1/8-12	540	395	1210	890	1960	1440
1 1/4-7	680	500	1520	1120	2460	1820
1 1/4-12	750	555	1680	1240	2730	2010
1 3/8-6	890	655	1990	1470	3230	2380
1 3/8-12	1010	745	2270	1670	3680	2710
1 1/2-6	1180	870	2640	1950	4290	3160
1 1/2-12	1330	980	2970	2190	4820	3560

Bolt Size	Bolt Head Identification					
	5.8		8.8		10.9	
	Class 5.8		Class 8.8		Class 10.9	
mm x pitch[c]	N-m	ft-lb	N-m	ft-lb	N-m	ft-lb
M 5 X 0.8	4	3	6	5	9	7
M 6 X 1	7	5	11	8	15	11
M 8 X 1.25	17	12	26	19	36	27
M 8 X 1	18	13	28	21	39	29
M10 X 1.5	33	24	52	39	72	53
M10 X 0.75	39	29	61	45	85	62
M12 X 1.75	58	42	91	67	125	93
M12 X 1.5	60	44	95	70	130	97
M12 X 1	90	66	105	77	145	105
M14 X 2	92	68	145	105	200	150
M14 X 1.5	99	73	155	115	215	160
M16 X 2	145	105	225	165	315	230
M16 X 1.5	155	115	240	180	335	245
M18 X 2.5	195	145	310	230	405	300
M18 X 1.5	220	165	350	260	485	355
M20 X 2.5	280	205	440	325	610	450
M20 X 1.5	310	230	650	480	900	665
M24 X 3	480	355	760	560	1050	780
M24 X 2	525	390	830	610	1150	845
M30 X 3.5	960	705	1510	1120	2100	1550
M30 X 2	1060	785	1680	1240	2320	1710
M36 X 3.5	1730	1270	2650	1950	3660	2700
M36 X 2	1880	1380	2960	2190	4100	3220

a. in-tpi = nominal thread diameter in inches-threads per inch

b. N· m = newton-meters

c. mm x pitch = nominal thread diameter in mm x thread pitch

d. ft-lb = foot pounds

Torque tolerance + 0%, -15% of torquingvalues. Unless otherwise specified use torquevalues listed above. 25199

Hydraulic Diagrams

Transport Lift

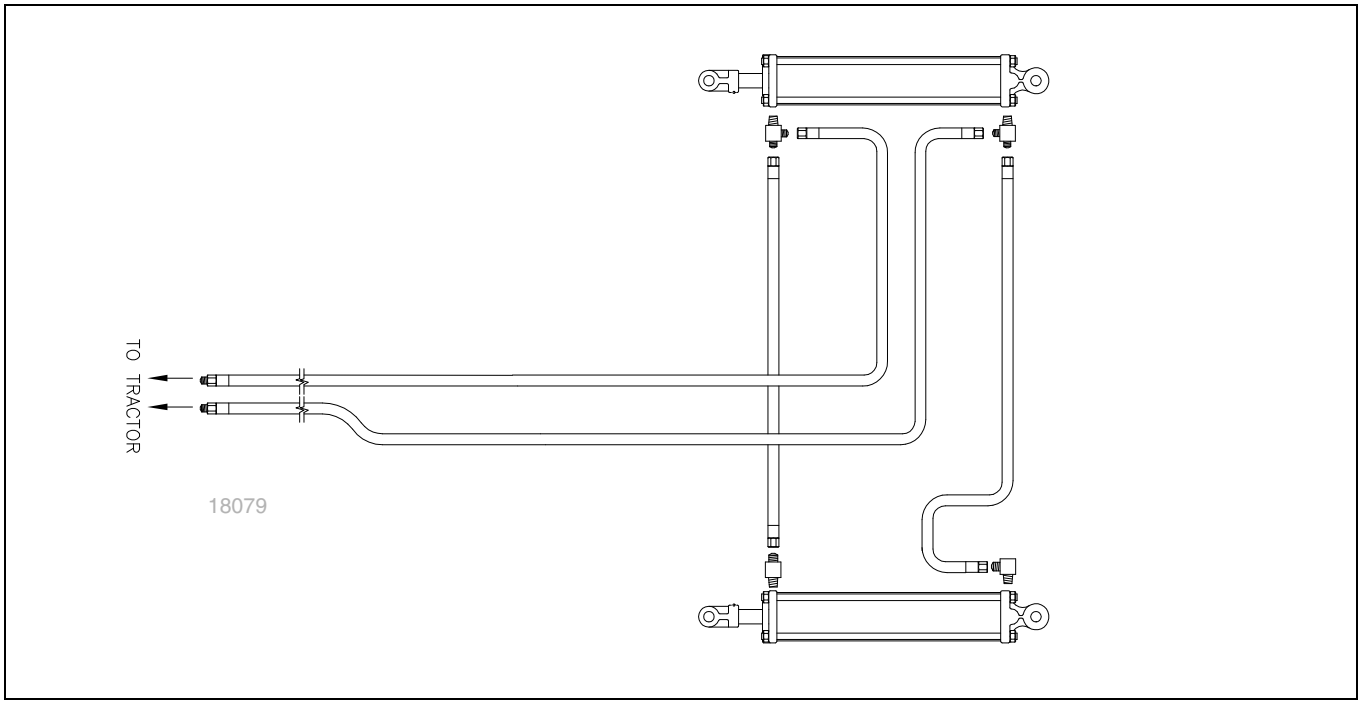

Fold

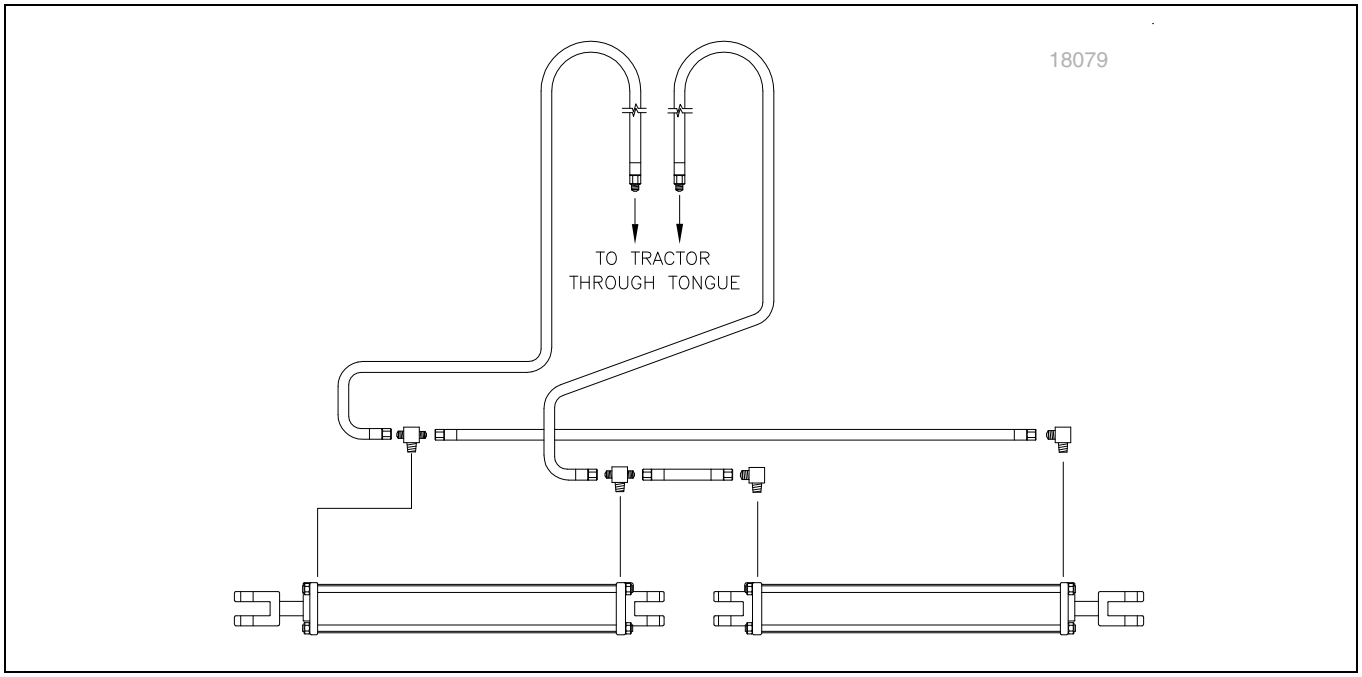

Dual Markers

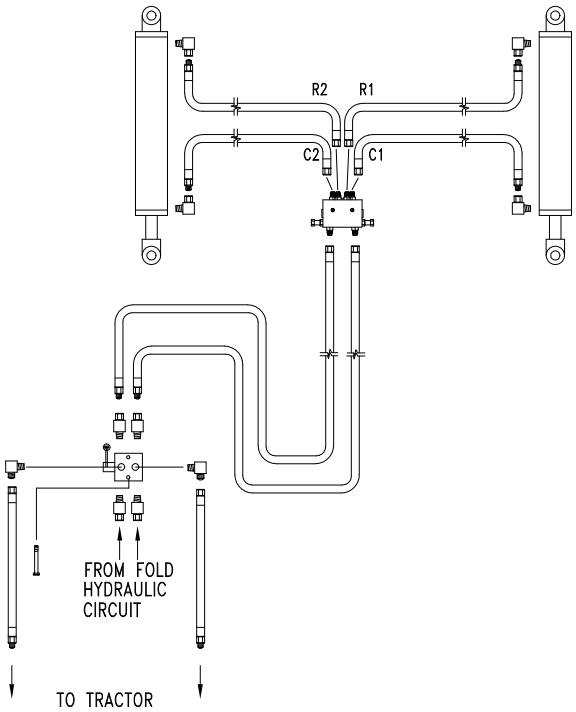

Single Marker

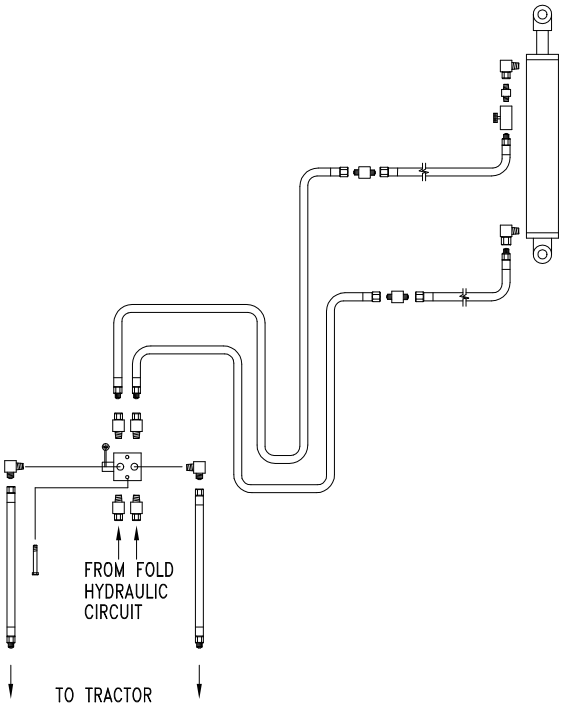

Two Outlet Conversion

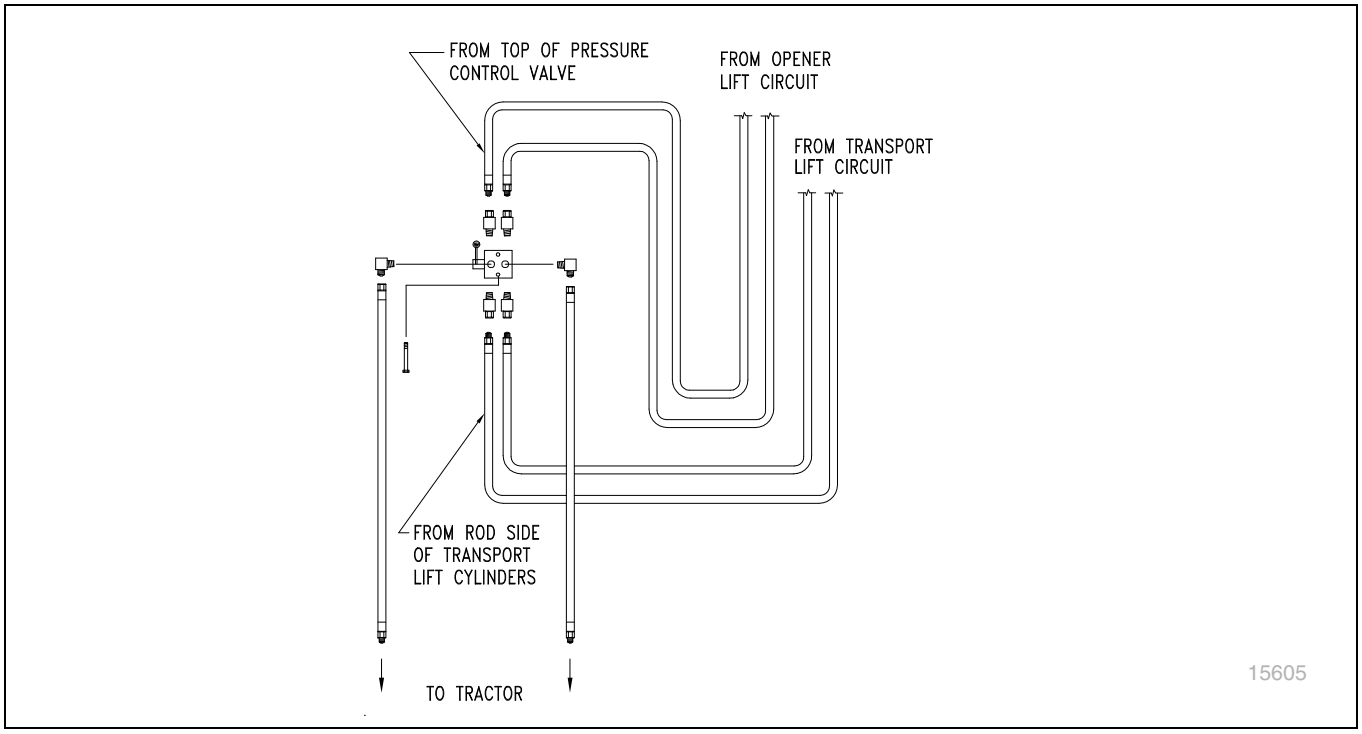

Opener Lift: Standard Closed-Center

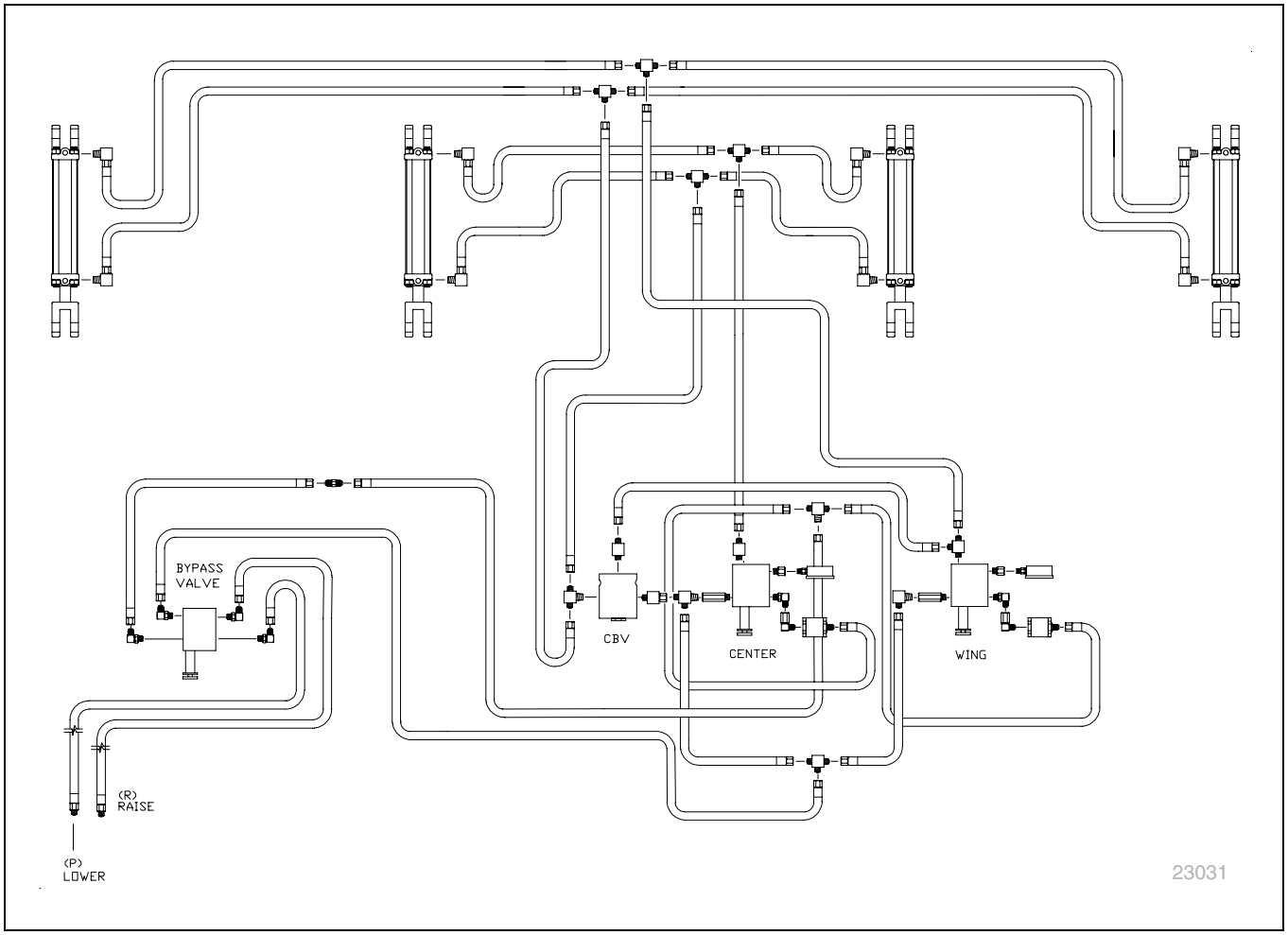

Opener Lift: Optional Open-Center

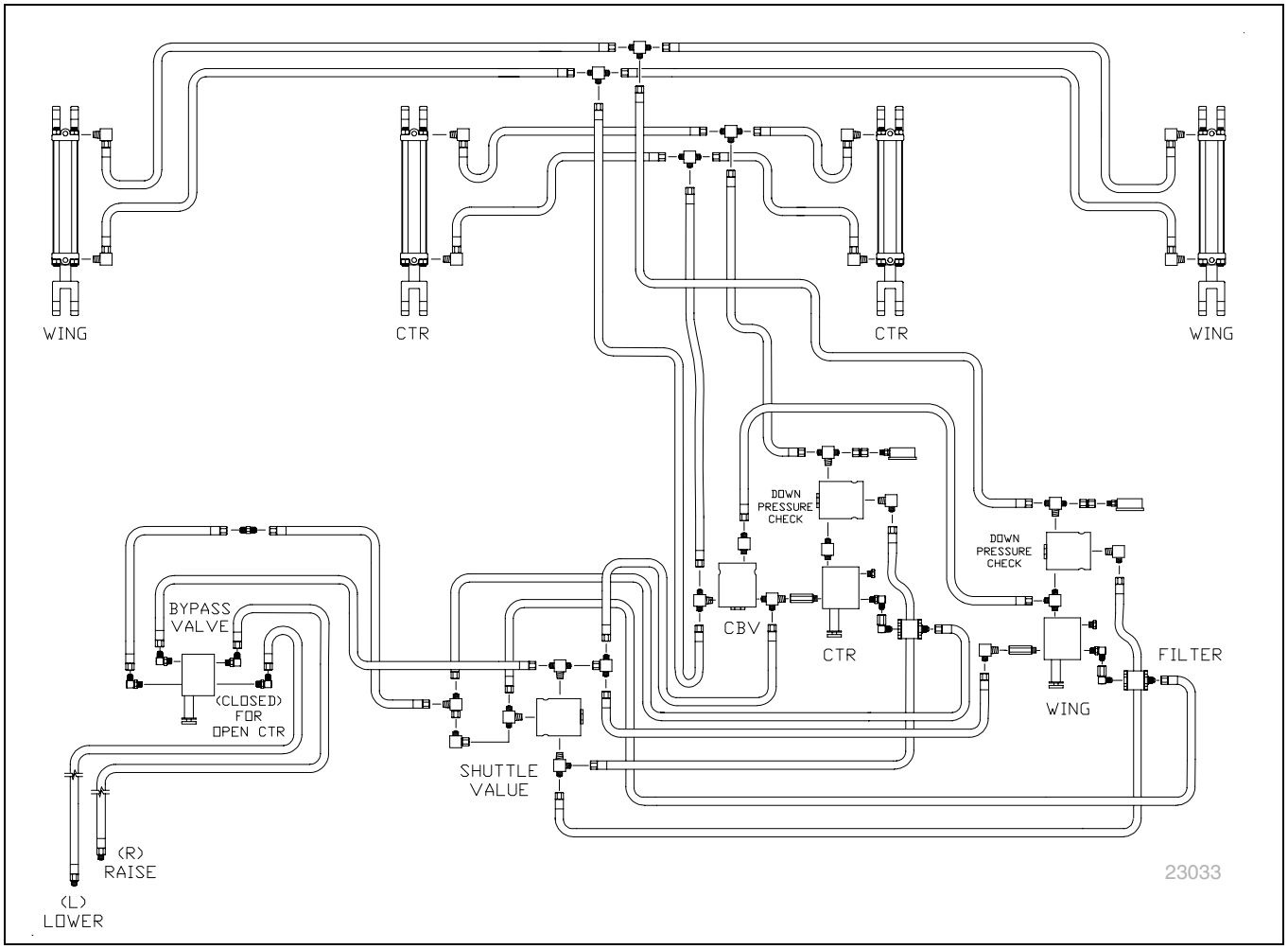

Point-Row

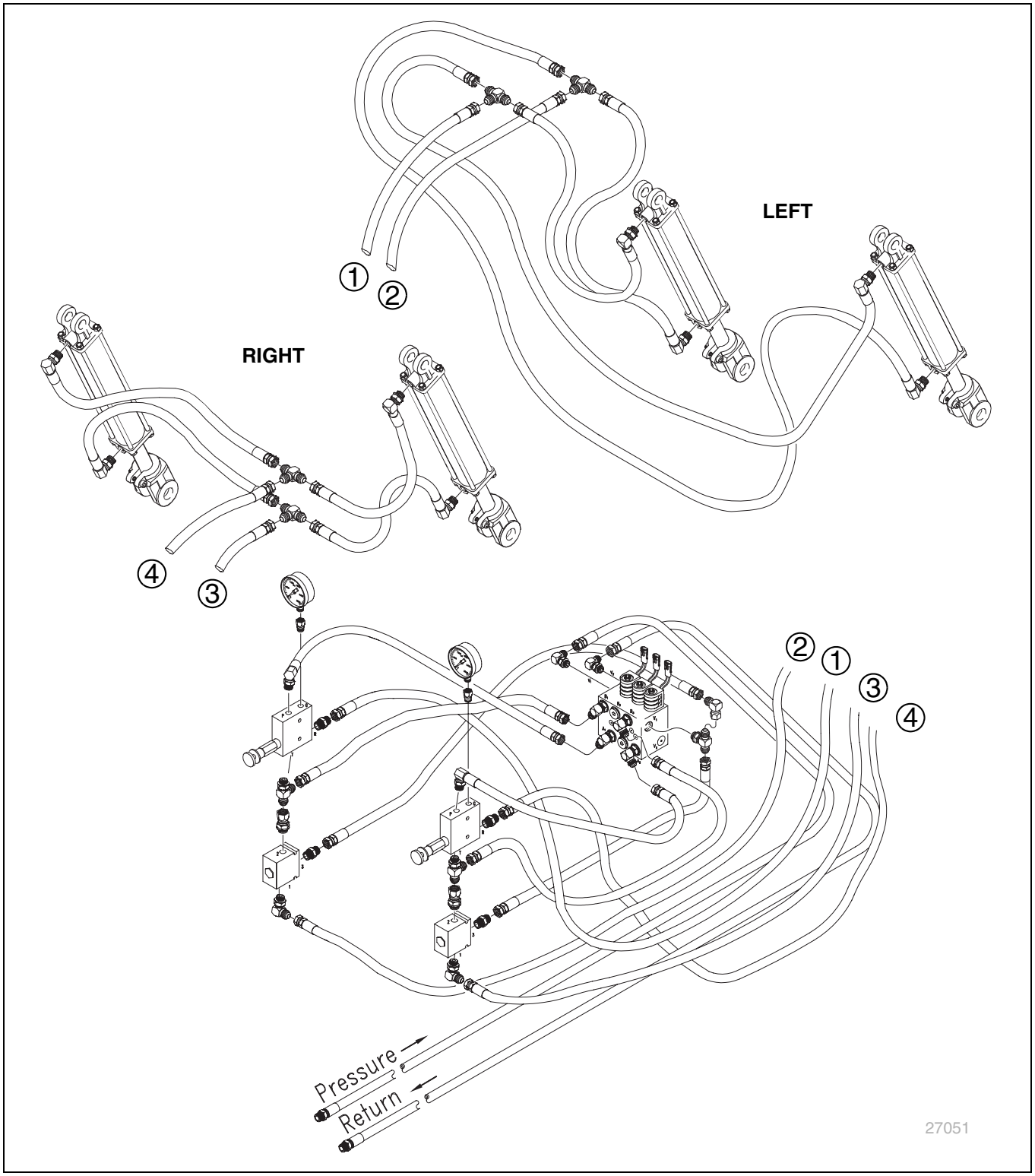

Great Plains

"Harvest Starts Here."

Great Plains, Mfg.
1525 E. North St.
P.O. Box 5060
Salina, KS 67402