Great Plains

Rotary Cutters

PARTS MANUAL

RC5610, RC6610, RCM5610 & RCM6610

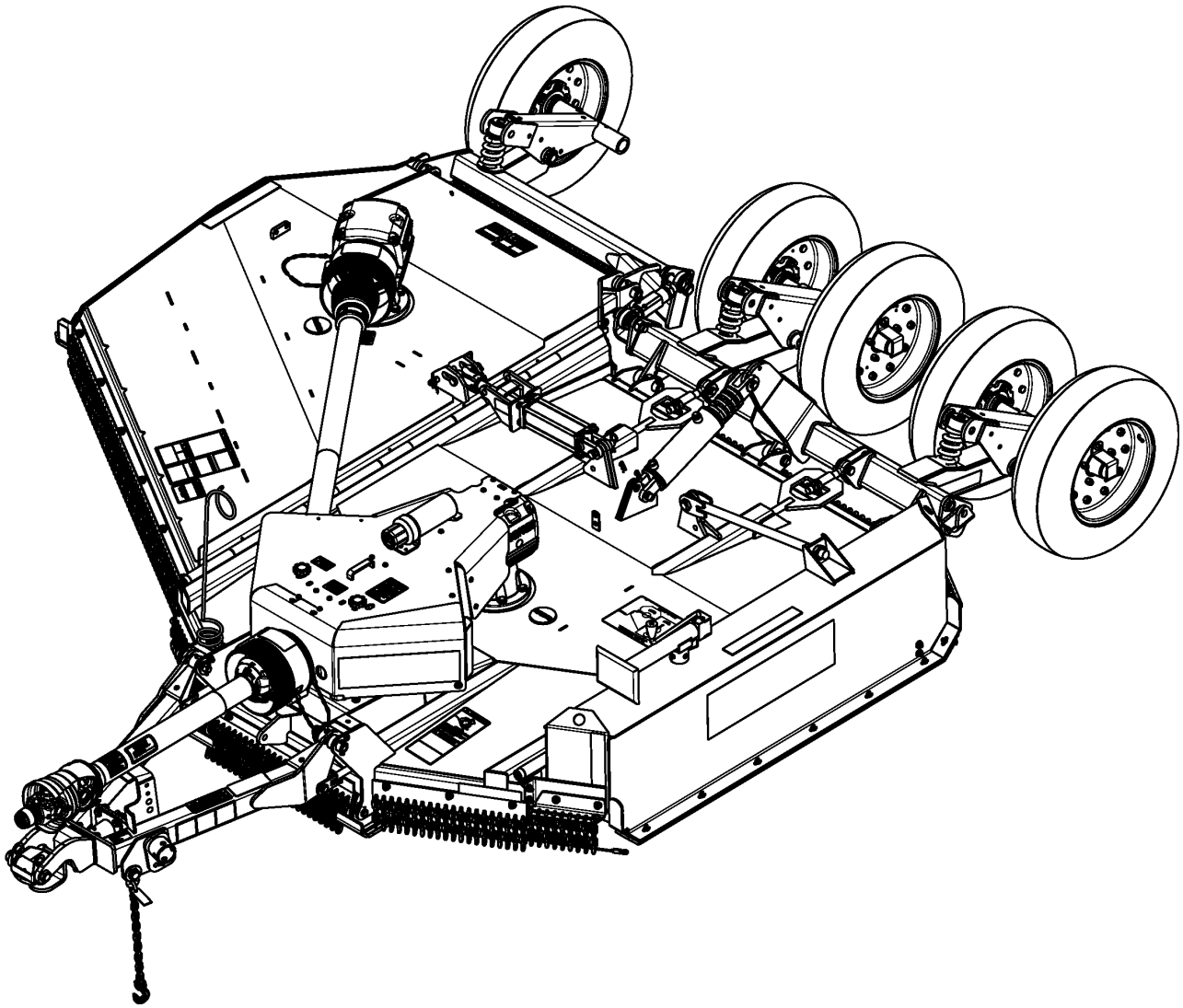

Original Instructions **334-290P**

Read the Operator's Manual entirely. When you see this symbol, the subsequent instructions and warnings are serious - follow without exception. Your life and the lives of others depend on it!

© Copyright 2023 Printed 10/10/2023

Cover photo may show optional equipment not supplied with standard unit.

Great Plains
"Harvest Starts Here."

Table Of Contents

Introduction **2**
Using This Manual *2*
Manual Replacement Information *2*
Manual Revisions *2*
Touch-up Paint *2*
Hardware Legend *3*
Replacement Hardware *3*
Serial Numbers *3*
Section 2: Decks & Hitches **4**
Blade Carrier *4*
Blade Carrier *6*
Deck Center Components *8*
Deck Center Drive Components *10*
Deck Wing Components *12*
Deck Wing Drive Components *14*
Hitch A-Frame *16*
Hitch Ball Coupler (330-335A) *18*
Hitch Bar Tite *20*
Hitch Performance *22*
Hitch Pintle *24*
Hitch Standard Pivoting Clevis *26*
Leveling Rod & Wing Turnbuckle *28*
Off Center Lights 3 Inch (LED) *30*
Splitter Box Sliding Cover *32*
Weight Box *34*
Section 3: Axles **36**
Axle Center *36*
Axle Center Tandem S/N D001113N- *38*
Axle Center Tandem S/N D001114N+ *40*
Axle Wing *42*
Hub Assembly (330-938K) *44*
Rotary Cutter Tire Options *46*
Section 4: Guards **48**
Guards Chain Double Row Front *48*
Guards Chain Double Row Rear *50*
Guards Chain Single Row Front *52*
Guards Chain Single Row Rear *54*
Guards Chain W/ Cable Front *56*
Guards Chains W/ Cable Rear *58*
Guards Rubber Front *60*
Guards Rubber Rear *62*
Section 5: Drivelines **64**
Driveline Center (826-818C) Comer *64*
Driveline Conv. 1000 RPM (826-247C) Walterscheid *66*
Driveline Conv. 540 RPM (826-112C) Walterscheid *68*
Driveline CV 1.38 1000 RPM (826-644C) Weasler *70*
Driveline CV 1.38 1000 RPM W/ Overrunning Clutch (826-793C) Weasler *72*
Driveline CV 1.75 1000 RPM (826-645C) *74*
Driveline CV 540 RPM (826-643C) Weasler *76*
Driveline Wing (826-811C) Comer *78*
Driveline Wing (826-812C) Comer *80*
Driveline Wing (826-812C) Walterscheid *82*
Section 6: Gearboxes (1000) **84**
Gearbox (826-322C) Comer *84*
Gearbox (826-726C) *86*
Gearbox (826-731C) *88*
Gearbox (826-732C) *90*
Gearbox (826-921C) Comer *92*
Gearbox (826-923C) Comer *94*
Gearbox (826-928C) Comer *96*
Gearbox 1000 RPM (826-319C) *98*
Gearbox 1000 RPM (826-324C) *100*
Gearbox 1000 RPM (826-725C) *102*
Gearbox 1000 RPM LH & RH (826-317C) *104*
Gearbox Divider 1000 RPM (826-521C) Comer *106*
Gearbox Divider 1000 RPM (826-521C) ITG *108*
Section 6: Gearboxes (540) **110**
Gearbox (826-650C) Comer *110*
Gearbox (826-721C) *112*
Gearbox (826-729C) *114*
Gearbox (826-730C) *116*
Gearbox (826-925C) Comer *118*
Gearbox (826-927C) Comer *120*
Gearbox Divider 540 RPM (826-520C) Comer *122*
Gearbox Divider 540 RPM (826-520C) ITG *124*

Section 7: Hydraulics **126**
Hydraulic Components *126*
Hydraulic Cylinder (810-162C) Midway *128*
Hydraulic Cylinder (810-162C) Red Lion ... *130*
Hydraulic Cylinder 3.25 x 6.0 x 1.25 Rod (810-640C) ... *132*
Hydraulic Cylinder 3.5 x 8.0 x 1.25 Rod (810-162C) *134*
Section 8: Decals **136**
Decals *136*
Section 9: Options & Accessories **138**
Export Lights Front *138*
Export Lights Hydraulics *140*
Export Lights Rear Standard Axle *142*
Manual Winch Wing Deck *144*
Off Center Lights 3 Inch (LED) Retro-Fit (334-579A) *146*
Tow Lug Bundle *148*

This Page Intentionally Left Blank

General Information

Using This Manual

This manual is divided into sections. The first section contains General Information, a Table of Contents, an Alphabetical Page Index, and a Part Number Index. The remaining sections divide the machine into segments (i.e. Frames, Drives, Hydraulics, etc.) which illustrate and list all parts.

The Great Plains parts in this manual are specially designed for this machine and should be replaced with Great Plains parts only.

The information in this manual is current at printing. Some parts may change to assure top performance.

Right-hand and left-hand as used in this manual are determined by facing the direction the machine will travel while in use.

Below is an example of two facing pages from a parts manual. Familiarize yourself with the contents of these pages.

Manual Replacement Information

Replacement manuals are available. Refer to your dealer or the Great Plains Publications Catalog for additional information.

Manual Revisions

When this manual is revised, the modification date is printed on the front cover and on the revised page(s).

Touch-up Paint

Repaint parts where paint is worn or scratched to prevent rust. Aerosol touch-up paint is available. To order use Great Plains parts numbers below:

GP Green	821-001C
GP Black	821-002C
GP Beige	821-003C
GP Buckskin	821-004C

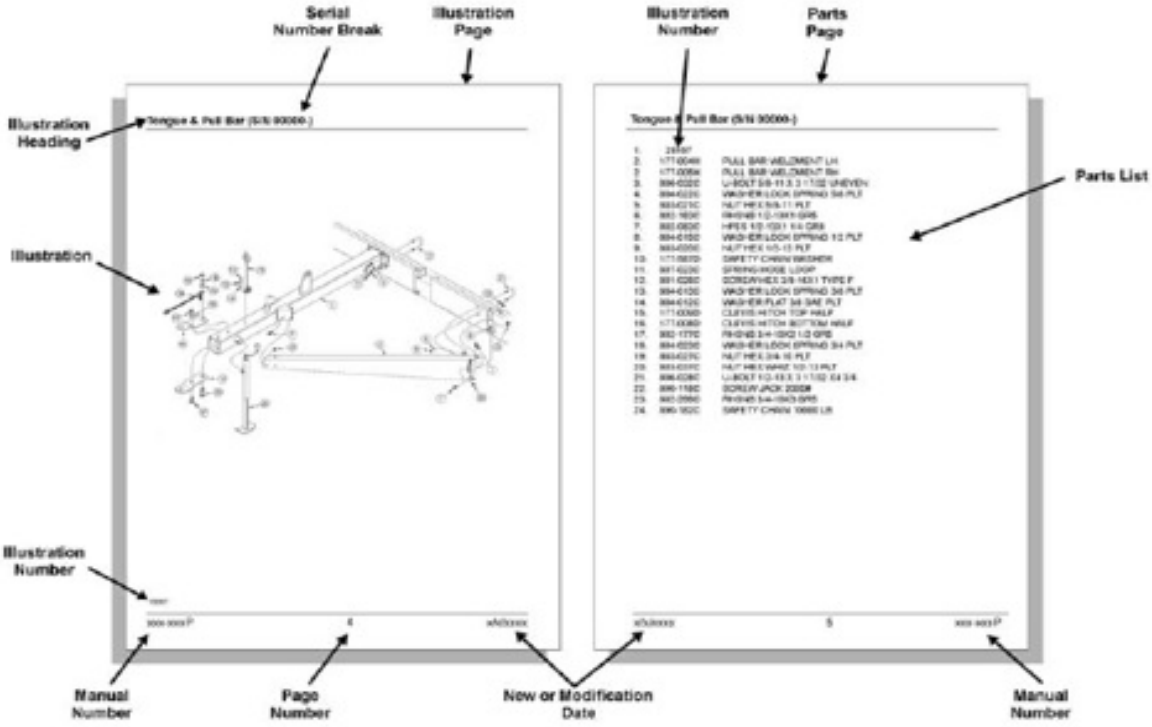

© Copyright 2020. All rights reserved.

Great Plains Manufacturing, Inc. provides this publication "as is" without warranty of any kind, either expressed or implied. While every precaution has been taken in the preparation of this manual, Great Plains Manufacturing, Inc. assumes no responsibility for errors or omissions. Neither is any liability assumed for damages resulting from the use of the information contained herein. Great Plains Manufacturing, Inc. reserves the right to revise and improve its products as it sees fit. This publication describes the state of this product at the time of its publication and may not reflect the product in the future.

Great Plains Manufacturing, Incorporated Trademarks
The following are trademarks of Great Plains Mfg., Inc.: Application Systems, Ausherman, Land Pride, Great Plains
All other brands and product names are trademarks or registered trademarks of their respective holders.
Printed in the United States of America.

Hardware Legend

AR	As Required
BLADE	Blade Bolt
C	Cap Screw
CP	Cotter Pin
CPHSSS	Cup Point Hex Socket Set Screw
CPSHSS	Cup Point Square Head Set Screw
CPSQHSS	Cup Point Square Head Set Screw
CRFCHMS	Cross Recess Flat Countersunk Head Mach. Screw
CRPHMS	Cross Recess Pan Head Machine Screw
CRPHTFS	Cross Recess Pan Head Thread Forming
CRRHMS	Cross Recess Round Head Machine Screw
CRTHMS	Cross Recess Truss Head Machine Screw
CSNB	Countersunk Square Neck Bolt
FHMS	Flat Head Machine Screw
FTC	Full Thread Cap Screw
H	Hex Nut
HCLN	Hex Center Lock Nut
HFLCS	Hex Flange Lock Cap Screw
HFS	Hex Flange Screw
HFSLN	Hex Flange Serrated Lock Nut
HFSS	Hex Flange Serrated Screw
HHCS	Hex Head Cap Screw or Metric Bolt
HSBHCS	Hex Socket Button Head Cap Screw
HSFCHCS	Hex Socket Flat Countersunk Head Cap Screw
HSHCS	Hex Socket Head Cap Screw
HSSS	Hex Socket Head Screw
HTLN	Hex Top Lock Nut
HWHCS	Hex Washer Head Cap Screw
HWHMS	Hex Washer Head Machine Screw
HXBHCS	Hex Socket Button Head Cap Screw
J	Hex Jam Nut
JIC	37 Degree Tapered Thread
L	Helical Spring Lock Washer
LUG	Lug Bolt
NFC	National Fine Cap Screw
NPSM	National Pipe Straight Mechanical
NPTF	National Pipe Taper Fuel
P	Wide Plain Washer
PHMS	Pan Head Machine Screw
PLOW	Plow Bolt
RHMS	Round Head Machine Screw
RHSNB	Round Head Square Neck Bolt
SCREW LEVELING	Leveling Screw
SCREW THUMB	Thumb Screw
SCREW WELD	Weld Screw
SFCHMS	Slotted Flat Countersunk Head Machine Screw
SFHMS	Slotted Fillister Head Machine Screw
SP	Special
SP SCREW	Special Screw
SQHSS	Square Head Set Screw
SRHMS	Slotted Round Head Machine Screw
SSS	Socket Set Screw
STCS	Self Tapping Cap Screw
STHMS	Slotted Truss Head Machine Screw
WHEEL	Wheel Studs and Hub Long Bolts
WING	Wing Bolt

Replacement Hardware

The **Hardware Legend** above lists hardware abbreviations used in the parts lists. All bolts and nuts are grade 5 unless otherwise noted. The use of improper grades of hardware can result in personal injury, damage to equipment, or loss of property.

Serial Numbers

Always use the serial and model number when ordering parts. Refer to the operator's manual for serial number plate location.

(S/N 20001+ or S/N 20001 and above)	Includes serial numbers 20001 and above (to the latest number)
(S/N 10001↔20000)	Includes serial numbers between 10000 and 20001
(S/N 10000- or S/N 10000 and below)	Includes serial numbers 10000 and below (to the earliest number)

Blade Carrier

Applies to Models: RC5610, RCM5610

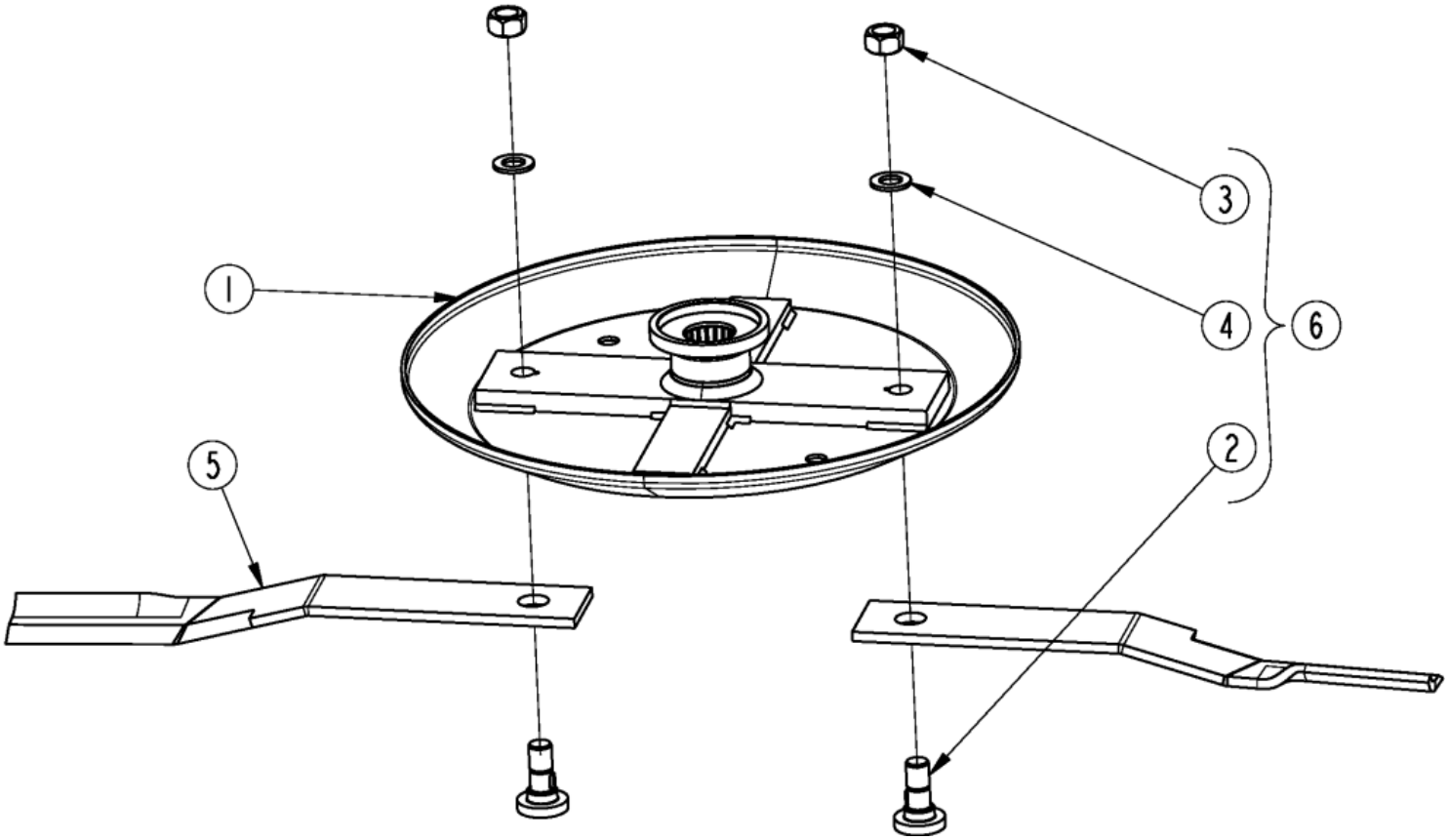

Blade Carrier

Applies to Models: RC5610, RCM5610

Ref.	Part No.	Part Description	Comments
	DWG 37992	Image No.	
1	330-970H	DISHPAN 19"	
2	802-277C	BLD BLT 1 1/8-12X3.44 W/.25KEY	
3	803-170C	NUT HEX TOP LOCK 1 1/8-12 PLT	
4	804-147C	WASHER FLAT 1" HARDENED	
5	820-168C	CUTTER BLADE 1/2X4X29 CCW	Center section (Standard)
5	820-478C	CUTTER BLADE 1/2X4X29 LL CCW	Center section (Low lift) --- Good for tall weeds and brush
5	820-249C	CUTTER BLADE 1/2X4X29 CW	Center Section (Special rotation)
5	820-725C	CUTTER BLADE 1/2X4X29 CCW HL	Center section (High lift) --- Good for grass cutting. Not intended for high exposure to brush and tree cutting, contact with ground or animal mounds and standing water.
5	820-727C	CUTTER BLADE 1/2X4X29 CW HL	Center section (High lift) (Special rotation) --- Good for grass cutting. Not intended for high exposure to brush and tree cutting, contact with ground or animal mounds and standing water.
5	820-169C	CUTTER BLADE 1/2X4X23 CCW	Right wing section (Standard)
5	820-479C	CUTTER BLADE 1/2X4X23 LL CCW	Right wing section (Low lift) --- Good for tall weeds and brush
5	820-170C	CUTTER BLADE 1/2X4X23 CW	Right Wing Section (Special rotation)
5	820-724C	CUTTER BLADE 1/2X4X23 CCW HL	Right wing section (High lift) --- Good for grass cutting. Not intended for high exposure to brush and tree cutting, contact with ground or animal mounds and standing water.
5	820-726C	CUTTER BLADE 1/2X4X23 CW HL	Right wing section (High lift) (Special rotation) --- Good for grass cutting. Not intended for high exposure to brush and tree cutting, contact with ground or animal mounds and standing water.
6	318-586A	BLADE BOLT KIT	

Blade Carrier

Applies to Models: RC6610, RCM6610

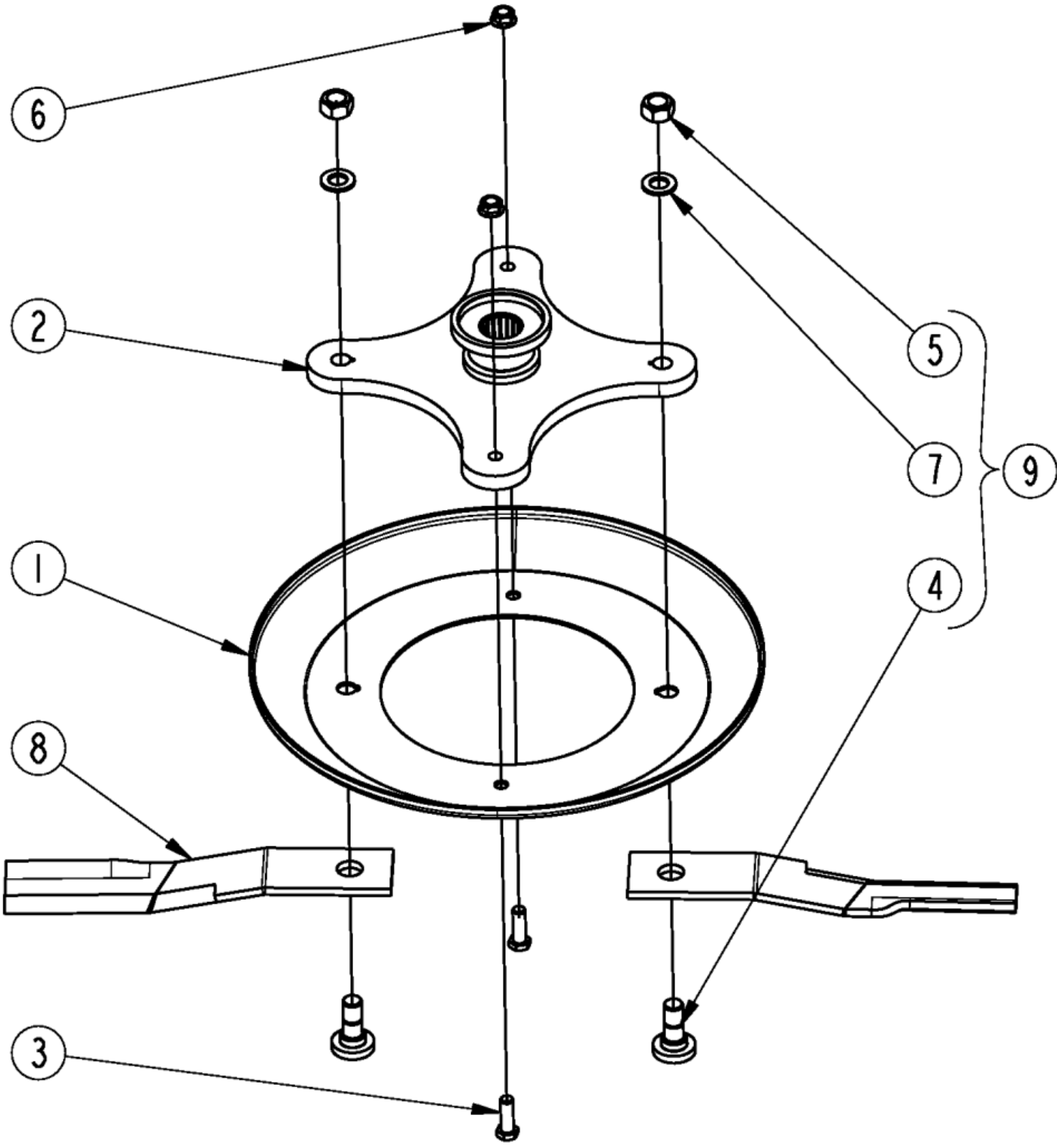

Blade Carrier

Applies to Models: RC6610, RCM6610

Ref.	Part No.	Part Description	Comments
	DWG 37983	Image No.	
1	318-190D	LARGE ROUND DISHPAN 3/16	
2	318-766H	WLDMT, 65 SERIES DISHPAN	
3	802-065C	HHCS 3/4-10X2 1/4 GR5	
4	802-277C	BLD BLT 1 1/8-12X3.44 W/.25KEY	
5	803-170C	NUT HEX TOP LOCK 1 1/8-12 PLT	
6	803-181C	NUT HEX FLANGE LOCK 3/4-10 PLT	
7	804-147C	WASHER FLAT 1" HARDENED	
8	820-168C	CUTTER BLADE 1/2X4X29 CCW	Center section (Standard)
8	820-478C	CUTTER BLADE 1/2X4X29 LL CCW	Center section (Low lift) --- Good for tall weeds and brush
8	820-249C	CUTTER BLADE 1/2X4X29 CW	Center Section (Special rotation)
8	820-725C	CUTTER BLADE 1/2X4X29 CCW HL	Center section (High lift) --- Good for grass cutting. Not intended for high exposure to brush and tree cutting, contact with ground or animal mounds and standing water.
8	820-727C	CUTTER BLADE 1/2X4X29 CW HL	Center section (High lift) (Special rotation) --- Good for grass cutting. Not intended for high exposure to brush and tree cutting, contact with ground or animal mounds and standing water.
8	820-169C	CUTTER BLADE 1/2X4X23 CCW	Right wing section (Standard)
8	820-479C	CUTTER BLADE 1/2X4X23 LL CCW	Right wing section (Low lift) --- Good for tall weeds and brush
8	820-170C	CUTTER BLADE 1/2X4X23 CW	Right Wing Section (Special rotation)
8	820-724C	CUTTER BLADE 1/2X4X23 CCW HL	Right wing section (High lift) --- Good for grass cutting. Not intended for high exposure to brush and tree cutting, contact with ground or animal mounds and standing water.
8	820-726C	CUTTER BLADE 1/2X4X23 CW HL	Right wing section (High lift) (Special rotation) --- Good for grass cutting. Not intended for high exposure to brush and tree cutting, contact with ground or animal mounds and standing water.
9	318-586A	BLADE BOLT KIT	

Deck Center Components

Applies to Models: RC5610, RC6610, RCM5610, RCM6610

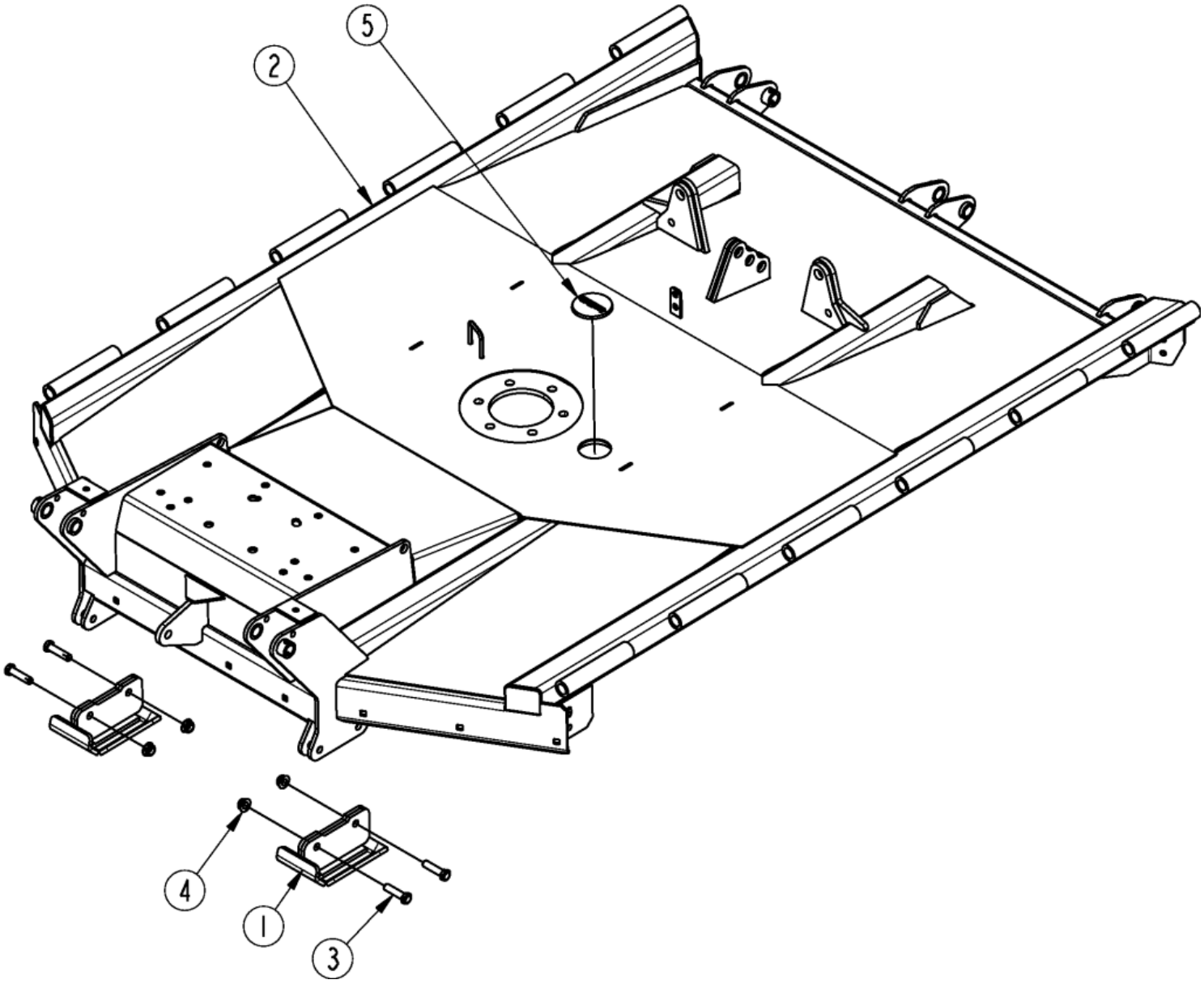

Deck Center Components

Applies to Models: RC5610, RC6610, RCM5610, RCM6610

Ref.	Part No.	Part Description	Comments
	DWG 39002	Image No.	
1	330-185H	SKID SHOE	
2	330-186H81	DECK, SMOOTH CENTER WO/DR	Without Deck Ring
2	330-189H81	DECK, SMOOTH CENTER W/DR	With Deck Ring
3	802-058C	HHCS 5/8-11X2 1/2 GR5	
4	803-263C	NUT HEX FLANGE LOCK 5/8-11 PLT	
5	840-273C	PLUG LP 3" ID RUBBER	

Deck Center Drive Components

Applies to Models: RC5610, RC6610, RCM5610, RCM6610

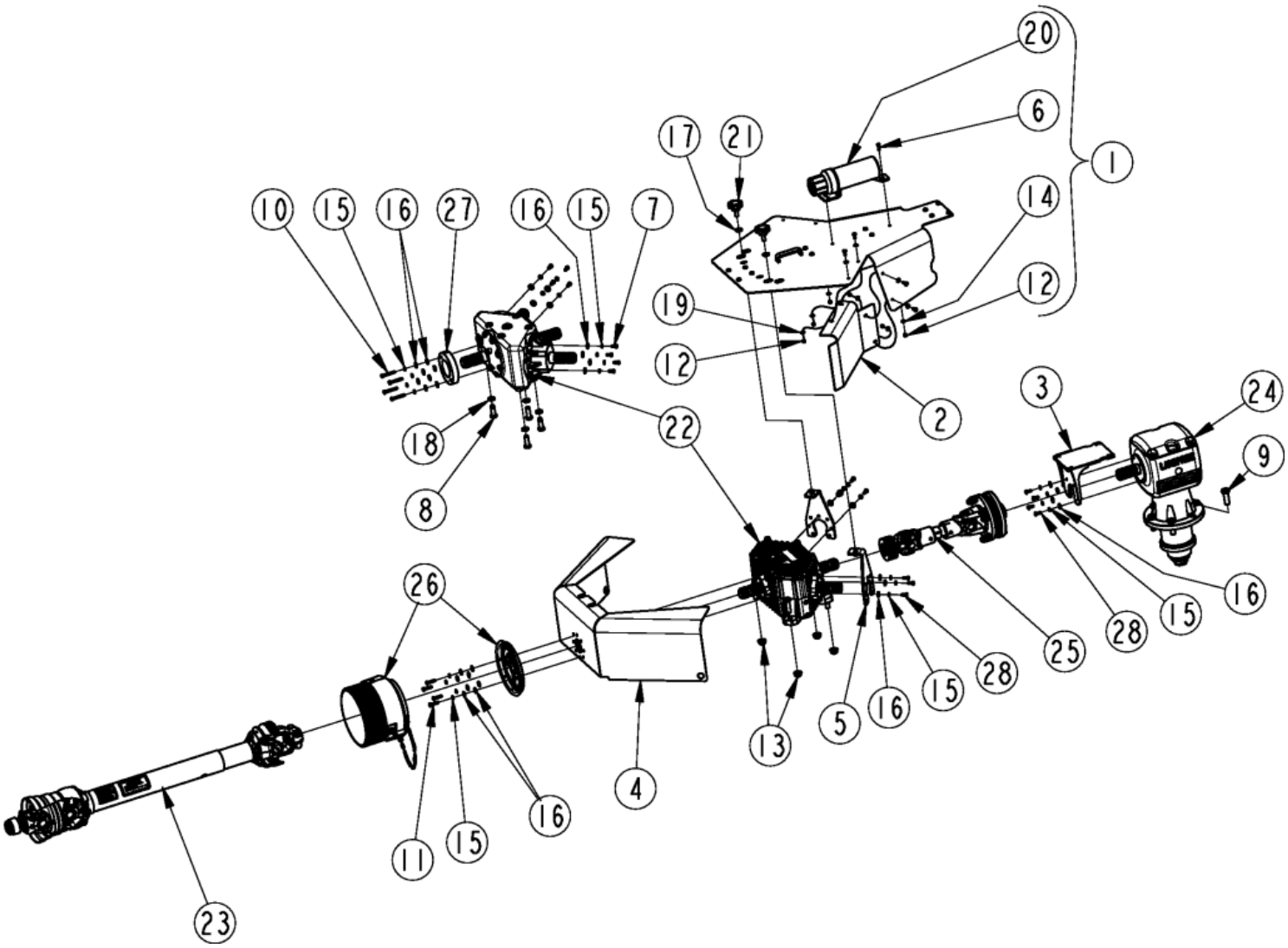

Deck Center Drive Components

Applies to Models: RC5610, RC6610, RCM5610, RCM6610

Ref.	Part No.	Part Description	Comments
	DWG 39003	Image No.	
1	318-920S	MANUAL STORAGE CONTAINER KIT	
2	331-121D	SPLITTER OFFSET PANEL	
3	331-554H	SLIDING SHIELD GB MNT, 50/60GB	
4	331-580H	TALL FRONT FIXED SHIELD	RC(M)6610
4	331-557H	FRONT FIXED SHIELD	RC(M)5610
5	331-581H	TALL SLIDING SHIELD SPLTR MNT	RC(M)6610
5	331-553H	SLIDING SHIELD SPLITTER MNT	RC(M)5610
6	802-005C	HHCS 1/4-20X1 GR5	
7	802-007C	HHCS 5/16-18X 3/4 GR5	
8	802-053C	HHCS 5/8-11X1 3/4 GR5	
9	802-065C	HHCS 3/4-10X2 1/4 GR5	
10	802-138C	HHCS 5/16-18X2 1/4 GR5	
11	802-967C	HHCS M8X1.25X35 GR8.8	
12	803-255C	NUT HEX NYLOCK 1/4-20	
13	803-263C	NUT HEX FLANGE LOCK 5/8-11 PLT	
14	804-007C	WASHER FLAT 1/4 SAE PLT	
15	804-009C	WASHER LOCK SPRING 5/16 PLT	
16	804-010C	WASHER FLAT 5/16 USS PLT	
17	804-016C	WASHER FLAT 1/2 SAE PLT	
18	804-022C	WASHER LOCK SPRING 5/8 PLT	
19	804-034C	WASHER FLAT 1/4 SAE SS	
20	816-481C	MANUAL STORAGE CONTAINER	
21	817-455C	KNOB 1/2-13 MALE THD 2 3/8OD	
22	826-520C	DIV BOX 540RPM 1 3/4-20	Comer & ITG (540 RPM)
22	826-521C	DIV BOX 1000RPM 1 3/4-20	Comer & ITG (1000 RPM)
23	826-112C	DRVLN C5 40 1.38-6 QD	RC5610 & RC6610
23	826-643C	DRVLN C6 42 1.38-6 CV	RC5610 & RC6610
23	826-247C	DRVLN C5 44 1.38-21 QD	RCM5610 & RCM6610
23	826-644C	DRVLN C6 42 1.38-21 CV	RCM5610 & RCM6610
23	826-645C	DRVLN C6 47 1.75-20 CV	RCM5610 & RCM6610
23	826-793C	DRVLN C6 39 1.38-21 CV ORCLTCH	RCM5610 & RCM6610
24	826-729C	GBOX RC60 1:1.60 STD	RC6610 CCW
24	826-730C	GBOX RC60 1:1.60 REV	RC6610 CW
24	826-925C	GBOX RC50 1:1.60 STD	(D001244N+) RC5610 CCW
24	826-650C	GBOX RC50 1:1.60 STD	(D001243N-) RC5610 CCW
24	826-927C	GBOX RC50 1:1.60 REV	(D001244N+) RC5610 CW
24	826-721C	RPBY 826-927C	(D001243N-) RC5610 CW
24	826-731C	GBOX RC60 1.15:1 STD	RCM6610 CCW
24	826-732C	GBOX RC60 1.15:1 REV	RCM6610 CW
24	826-725C	GBOX RC50 1.15:1 STD	RCM5610 CCW
24	826-726C	GBOX RC50 1.15:1 REV	RCM5610 CW
25	826-818C	DRVLN C4 11 1.75-20 FX CLTCH	
26	837-066C	DRIVELINE SHIELD CONE, 2 PIECE	
26	837-079C	DRVLN SHLD CONE, 2 PIECE LONG	Used only with driveline 826-793C
27	837-076C	SHIELD SPACER	
28	842-243C	HHCS M8X1.25X20 GR8.8 THD-LCK	

Deck Wing Components

Applies to Models: RC5610, RC6610, RCM5610, RCM6610

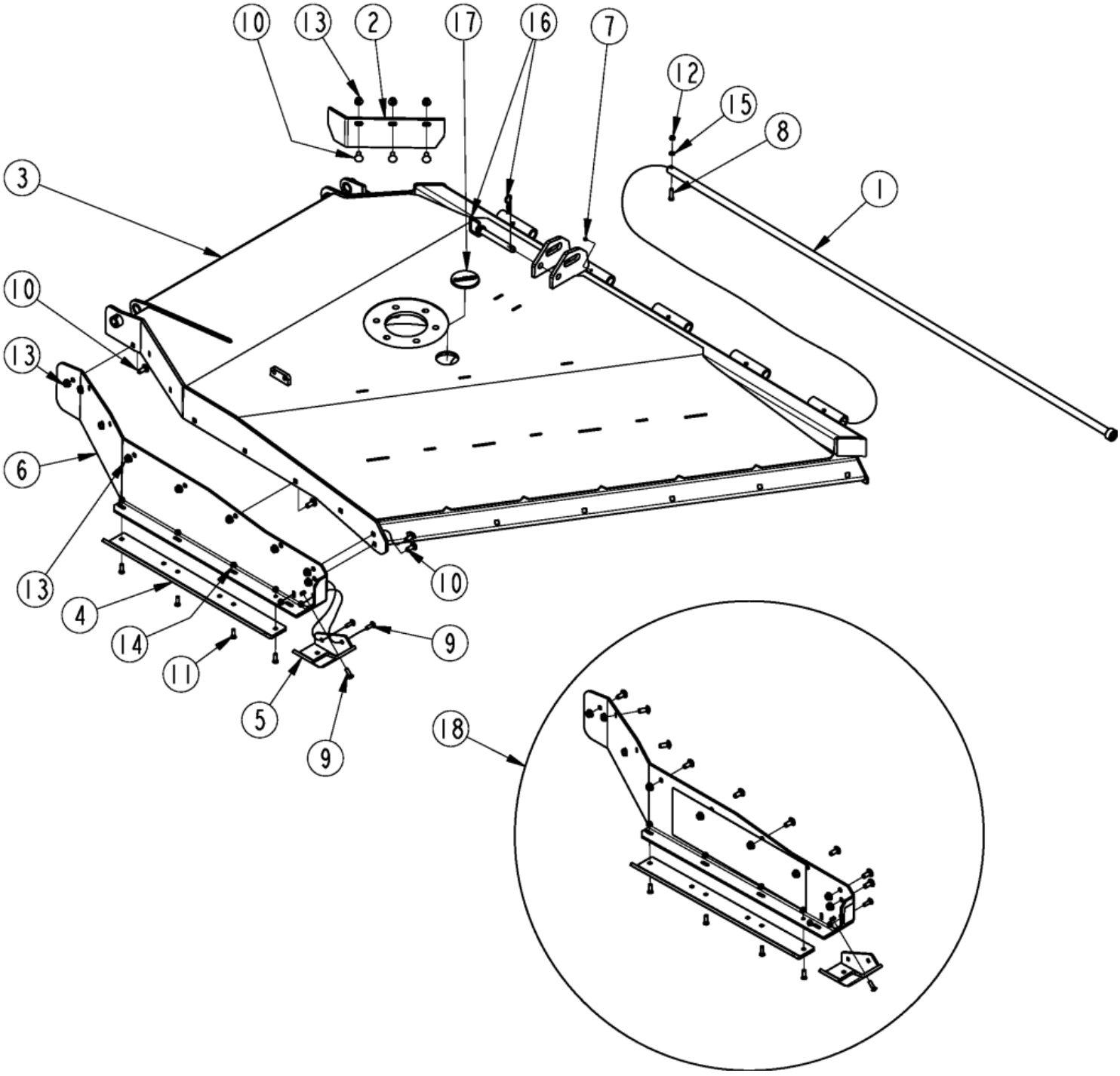

Deck Wing Components

Applies to Models: RC5610, RC6610, RCM5610, RCM6610

Ref.	Part No.	Part Description	Comments
	DWG 37970	Image No.	
1	318-696H	WLDMT. HINGE ROD	
2	318-927D	DEFLECTOR RH	
3	330-187H81	DECK, RH WING WO/DR GREEN	Without Deck Ring
3	330-190H81	DECK, RH WING W/DR GREEN	With Deck Ring
4	330-835D	WING SKID SHOE	
5	331-120H	HARDENED WING SKID SHOE	
6	331-207H81	N/A	Available in item 18
7	800-001C	GREASE ZERK STRAIGHT 1/4-28	
8	802-022C	HHCS 3/8-16X1 1/2 GR5	
9	802-155C	RHSNB 3/8-16X1 1/4 GR5	
10	802-214C	RHSNB 1/2-13X1 1/4 GR5	
11	802-466C	PLOW 3/8-16X1 1/4 GR5	
12	803-014C	NUT HEX 3/8-16 PLT	
13	803-037C	NUT HEX WHIZ 1/2-13 PLT	
14	803-198C	NUT HEX WHIZ 3/8-16 PLT	
15	804-013C	WASHER LOCK SPRING 3/8 PLT	
16	805-195C	PIN HTCH .75X5.25 USBL W/PIN	
17	840-273C	PLUG LP 3" ID RUBBER	
18	334-293K81	ASSY, SLOPED SIDE SKIRT RH GREEN	

Deck Wing Drive Components

Applies to Models: RC5610, RC6610, RCM5610, RCM6610

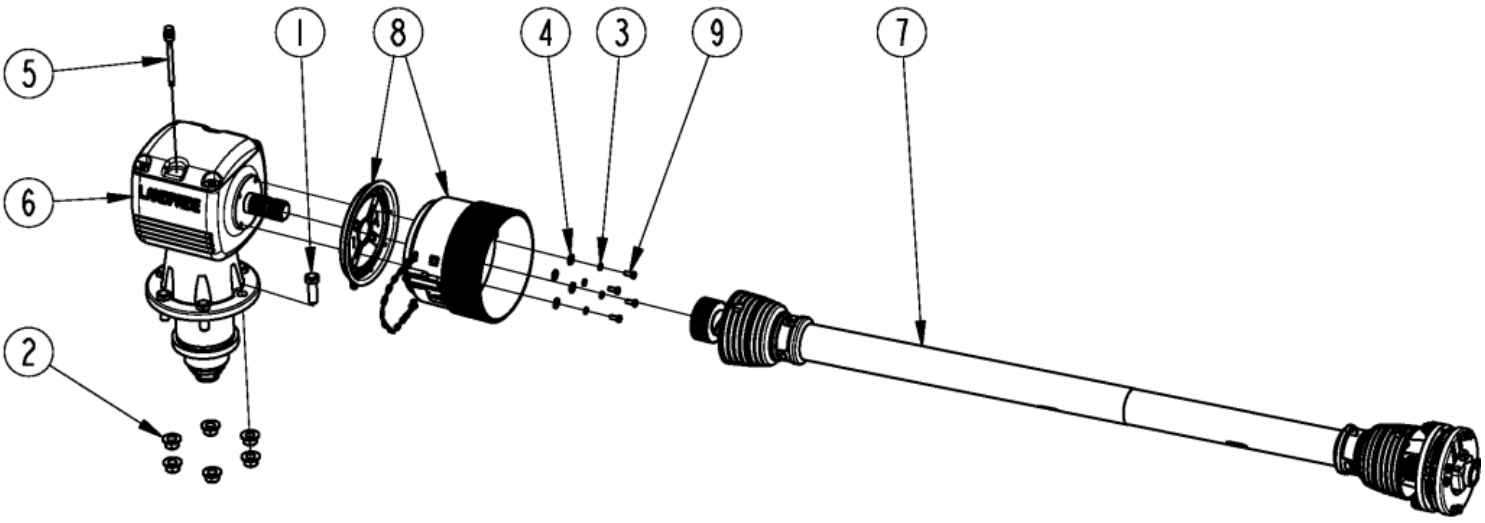

Deck Wing Drive Components

Applies to Models: RC5610, RC6610, RCM5610, RCM6610

Ref.	Part No.	Part Description	Comments
	DWG 37969	Image No.	
1	802-065C	HHCS 3/4-10X2 1/4 GR5	
2	803-299C	NUT HEX FLG TOP LK 3/4-10 PLT	
3	804-009C	WASHER LOCK SPRING 5/16 PLT	
4	804-010C	WASHER FLAT 5/16 USS PLT	
5	826-486C	COMER U0.125.7003.00 DIPSTICK	
6	826-730C	GBOX RC60 1:1.60 REV	RC6610 CCW
6	826-729C	GBOX RC60 1:1.60 STD	RC6610 CW
6	826-927C	GBOX RC50 1:1.60 REV	(D001244N+) RC5610 CCW
6	826-721C	RPBY 826-927C	(D001243N-) RC5610 CCW
6	826-925C	GBOX RC50 1:1.60 STD	(D001244N+) RC5610 CW
6	826-650C	GBOX RC50 1:1.60 STD	(D001243N-) RC5610 CW
6	826-324C	GBOX RCM60 1:1.21 REV	RCM6610 CCW
6	826-322C	GBOX RCM60 1:1.21 STD	RCM6610 CW
6	826-319C	RPBY 826-923C	RCM5610 CCW
6	826-317C	RPBY 826-921C	RCM5610 CW
7	826-812C	DRVLN C5 48 1.75-20 FX CLTCH	RC(M)5610 & RC(M)6610
7	826-811C	DRVLN C4 50 1.75-20 FX CLTCH	RC(M)5610
8	837-066C	DRIVELINE SHIELD CONE, 2 PIECE	
9	842-243C	HHCS M8X1.25X20 GR8.8 THD-LCK	

Hitch A-Frame

Applies to Models: RC5610, RC6610, RCM5610, RCM6610

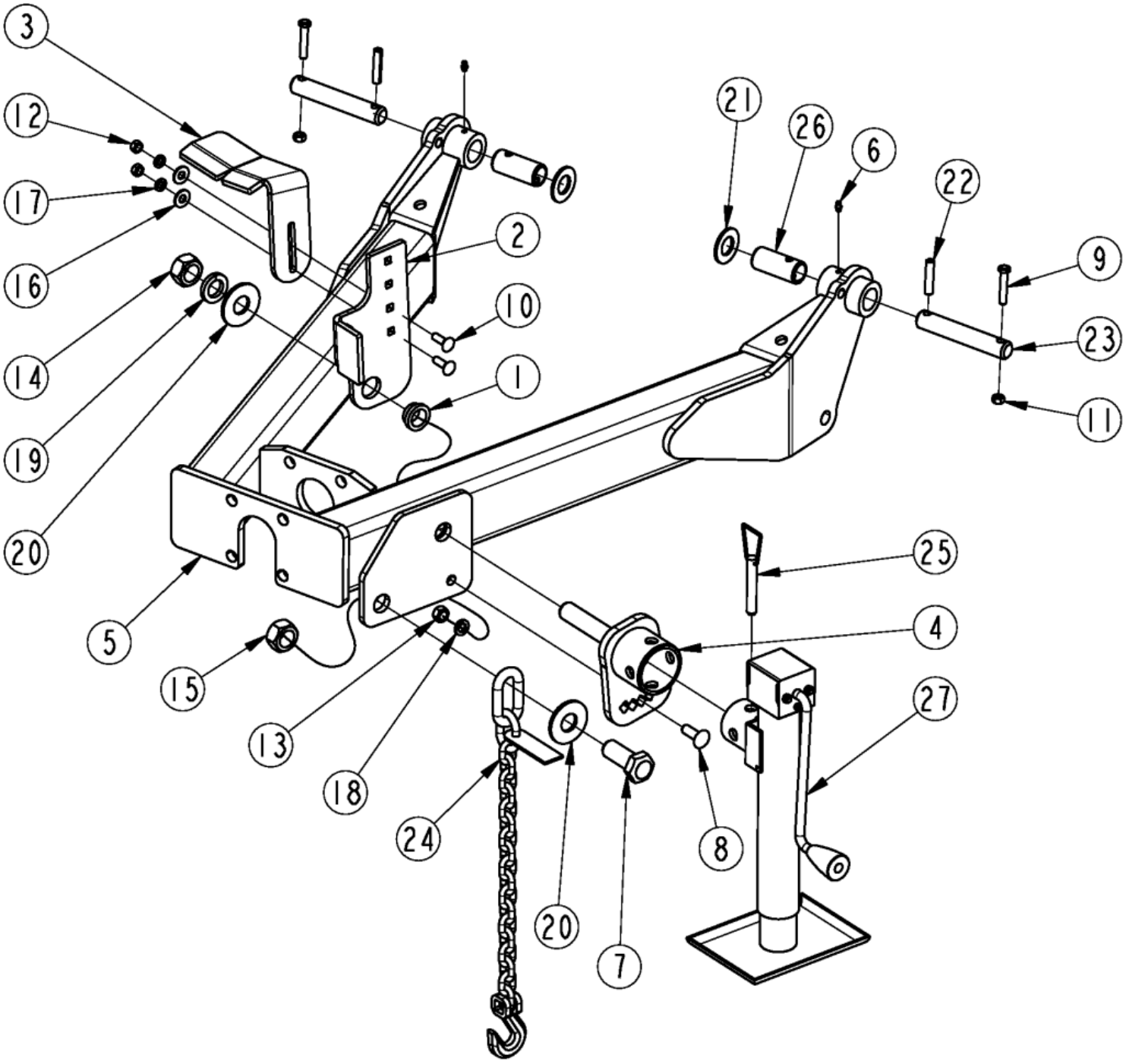

Hitch A-Frame

Applies to Models: RC5610, RC6610, RCM5610, RCM6610

Ref.	Part No.	Part Description	Comments
	DWG 39008	Image No.	
1	331-087D	PTO HANGER BUSHING	
2	331-088D	PTO HANGER STOP	
3	331-089D	PTO HANGER	
4	331-561H	ADJUSTABLE JACK MOUNT	
5	331-579H	HITCH W/ ADJ JACK MNT	
6	800-001C	GREASE ZERK STRAIGHT 1/4-28	
7	802-096C	HHCS 1-8X2 1/2 GR5	
8	802-106C	RHSNB 1/2-13X1 1/2 GR5	
9	802-143C	HHCS 3/8-16X2 GR5	
10	802-155C	RHSNB 3/8-16X1 1/4 GR5	
11	803-013C	NUT LOCK 3/8-16 PLT	
12	803-014C	NUT HEX 3/8-16 PLT	
13	803-020C	NUT HEX 1/2-13 PLT	
14	803-031C	NUT HEX 1-8 PLT	
15	803-168C	NUT HEX TOP LOCK 1-8 PLT	
16	804-011C	WASHER FLAT 3/8 USS PLT	
17	804-013C	WASHER LOCK SPRING 3/8 PLT	
18	804-015C	WASHER LOCK SPRING 1/2 PLT	
19	804-027C	WASHER LOCK SPRING 1 PLT	
20	804-028C	WASHER FLAT 1 USS PLT	
21	804-029C	WASHER FLAT 1 SAE	
22	805-249C	PIN ROLL 3/8 X 2 PLT	
23	805-548C	PIN 1.0 X 4.62 USBL HRDN	
24	890-182C	SAFETY CHAIN 10000 LB	
25			
26	890-970C	BUSHING 1.25ODX1.00IDX2.87	
27	891-524C	SIDEWIND JACK 7000 LB	

Hitch Ball Coupler (330-335A)

Applies to Models: RC5610, RC6610, RCM5610, RCM6610

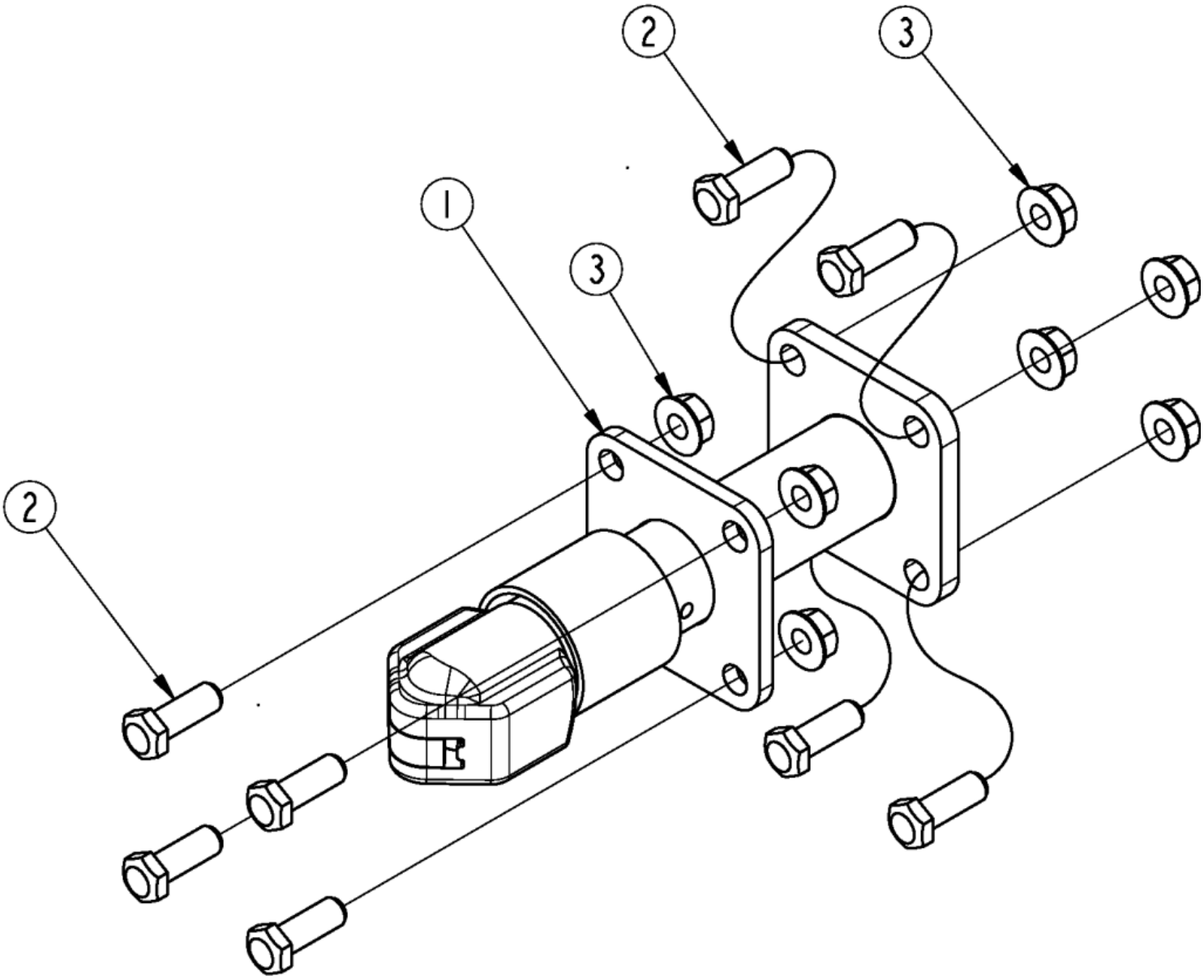

Hitch Ball Coupler (330-335A)

Applies to Models: RC5610, RC6610, RCM5610, RCM6610

Ref.	Part No.	Part Description	Comments
	DWG 26568	Image No.	
	330-335A	2 5/16" BALL HITCH ASSEMBLY *	Complete assembly
1	330-348H	2 5/16" BALL HITCH WELDMENT	
2	802-053C	HHCS 5/8-11X1 3/4 GR5	
3	803-304C	NUT HEX WHIZ 5/8-11 PLT	

Hitch Bar Tite

Applies to Models: RC5610, RC6610, RCM5610, RCM6610

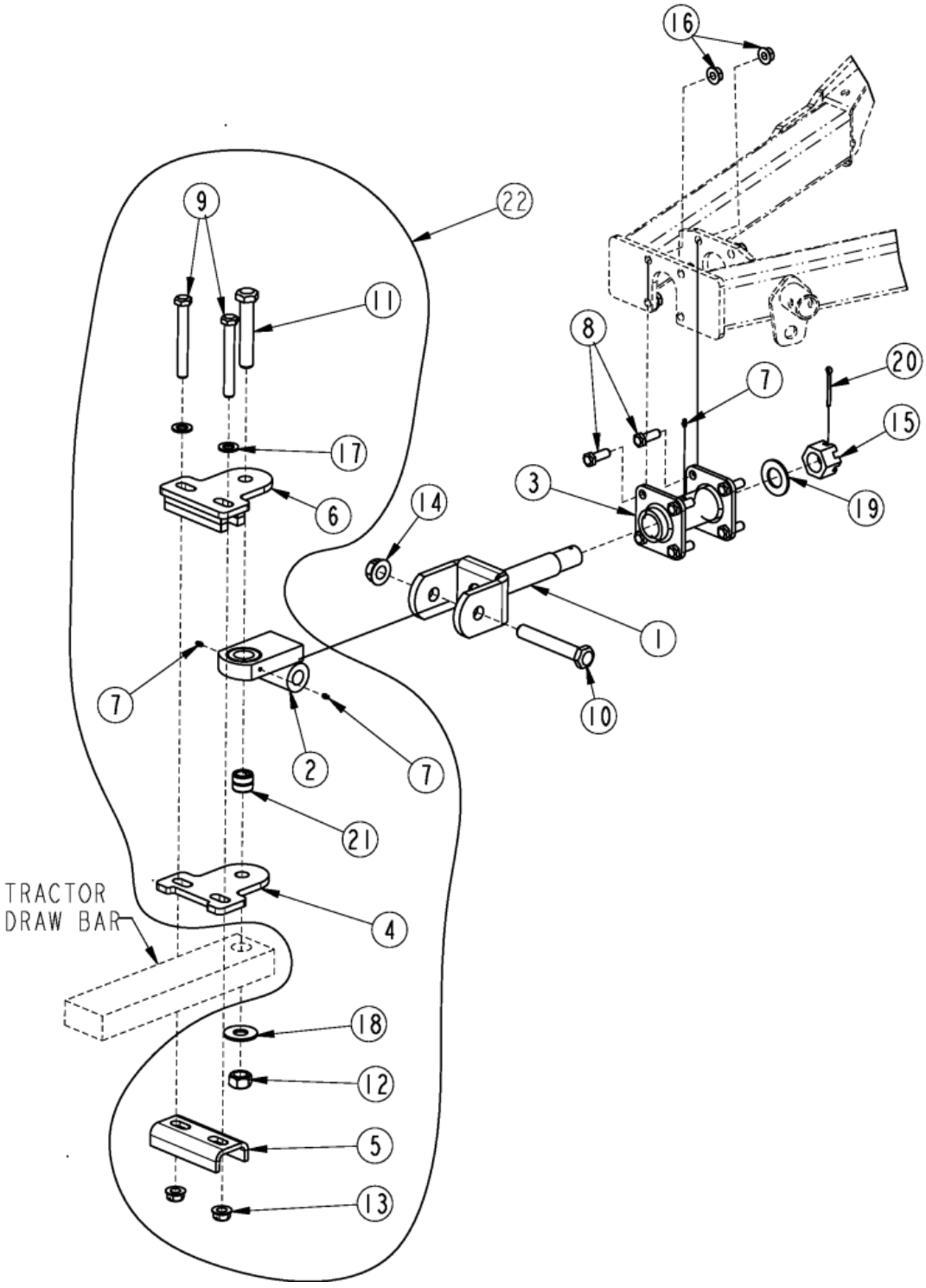

Hitch Bar Tite

Applies to Models: RC5610, RC6610, RCM5610, RCM6610

Ref.	Part No.	Part Description	Comments
	DWG 26569	Drawing Image Number	
	330-333A	BAR TITE HITCH *	Complete assembly
1	318-358H	SHAFT WELDMENT	
2	318-834H	WELDMENT HITCH CLEVIS	
3	330-271H	SWIVEL RECEIVER	
4	330-563D	HITCH WEAR PLATE WIDE	
5	330-564D	FORMED HITCH SUPPORT WIDE	
6	330-975H	BAR TITE WIDE TOP	
7	800-001C	GREASE ZERK STRAIGHT 1/4-28	
8	802-053C	HHCS 5/8-11X1 3/4 GR5	
9	802-070C	HHCS 3/4-10X6 GR5	
10	802-074C	HHCS 1-8X6 1/2 GR5	
11	802-205C	HHCS 1-8X5 1/2 GR5	
12	803-168C	NUT HEX TOP LOCK 1-8 PLT	
13	803-181C	NUT HEX FLANGE LOCK 3/4-10 PLT	
14	803-258C	NUT HEX FLG LOCK 1-8 GR B PLT	
15	803-301C	NUT HEX SLOTTED 1 1/2-6 PLT	
16	803-304C	NUT HEX WHIZ 5/8-11 PLT	
17	804-025C	WASHER FLAT 3/4 SAE PLT	
18	804-028C	WASHER FLAT 1 USS PLT	
19	804-171C	WASHER FLAT 1.50 HARD ASTMF436	
20	805-105C	PIN COTTER 1/4 X 2 1/2 PLT	
21	890-862C	BUSHING 1.50ODX1.00IDX1.25	
22	330-974K	BAR TITE HITCH WIDE	

Hitch Performance

Applies to Models: RC5610, RC6610, RCM5610, RCM6610

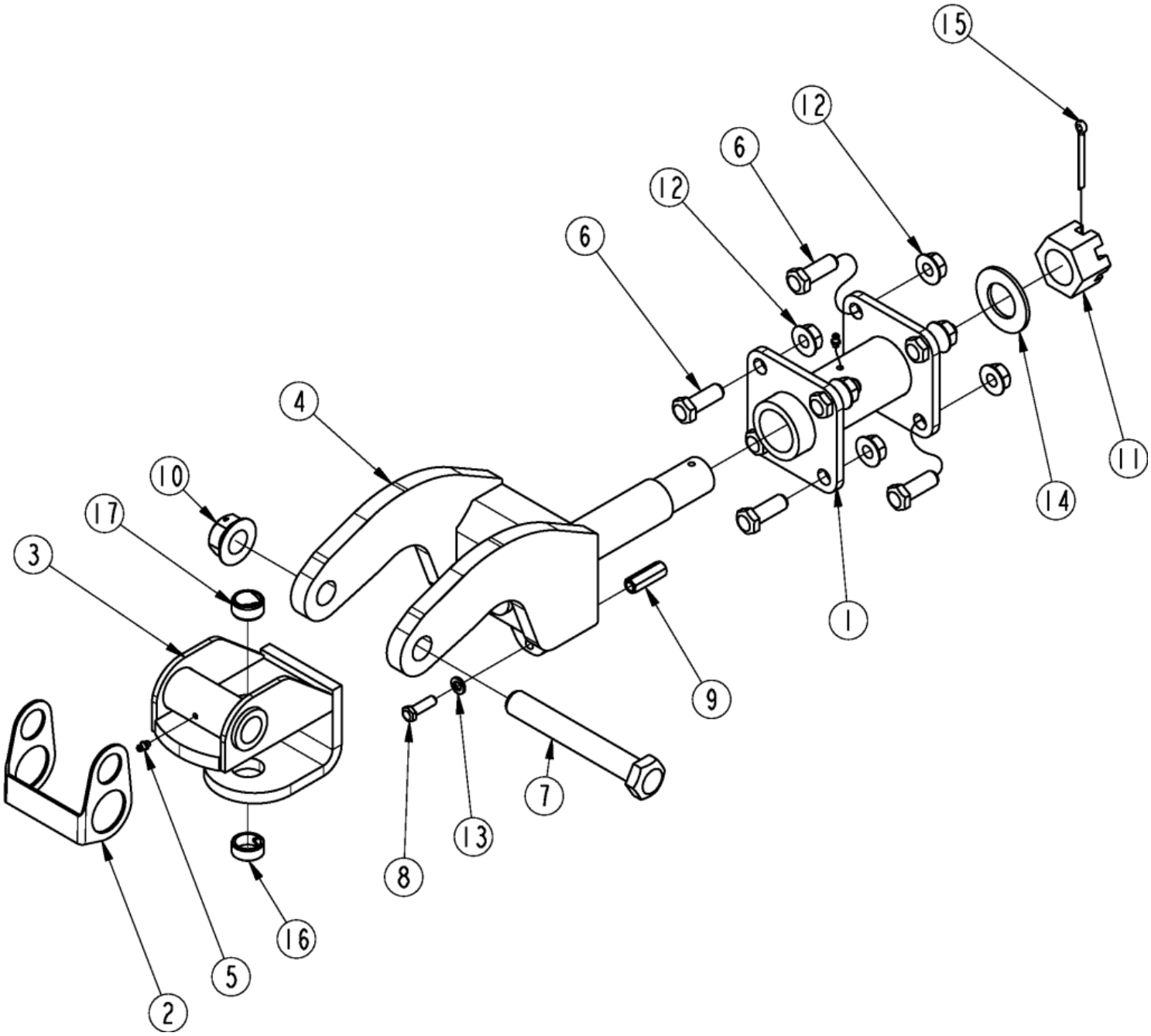

Hitch Performance

Applies to Models: RC5610, RC6610, RCM5610, RCM6610

Ref.	Part No.	Part Description	Comments
	DWG 39286	Image No.	
	334-045A	LP PERFORMANCE HITCH	Complete assembly
		*	
1	330-271H	SWIVEL RECEIVER	
2	331-543D	HITCH HOLDER	
3	334-046H	HITCH CLEVIS	
4	334-048H	HITCH YOKE	
5	800-001C	GREASE ZERK STRAIGHT 1/4-28	
6	802-053C	HHCS 5/8-11X1 3/4 GR5	
7	842-460C	HHCS 1-8X7 GR8 SPTHD	S/N _____+
7	802-075C	HHCS 1-8X7 GR5	S/N _____-
8	802-079C	HHCS 3/8-16X1 1/4 GR5	
9	803-201C	NUT HEX COUPLER 3/8-16X1 3/4	
10	803-258C	NUT HEX FLG LOCK 1-8 GR B PLT	
11	803-301C	NUT HEX SLOTTED 1 1/2-6 PLT	
12	803-304C	NUT HEX WHIZ 5/8-11 PLT	
13	804-013C	WASHER LOCK SPRING 3/8 PLT	
14	804-171C	WASHER FLAT 1.50 HARD ASTMF436	
15	805-105C	PIN COTTER 1/4 X 2 1/2 PLT	
16	890-836C	BUSHING 1 1/4X1X1/2 HRD	
17	890-850C	BUSHING 1 1/4X1X5/8	

Hitch Pintle

Applies to Models: RC5610, RC6610, RCM5610, RCM6610

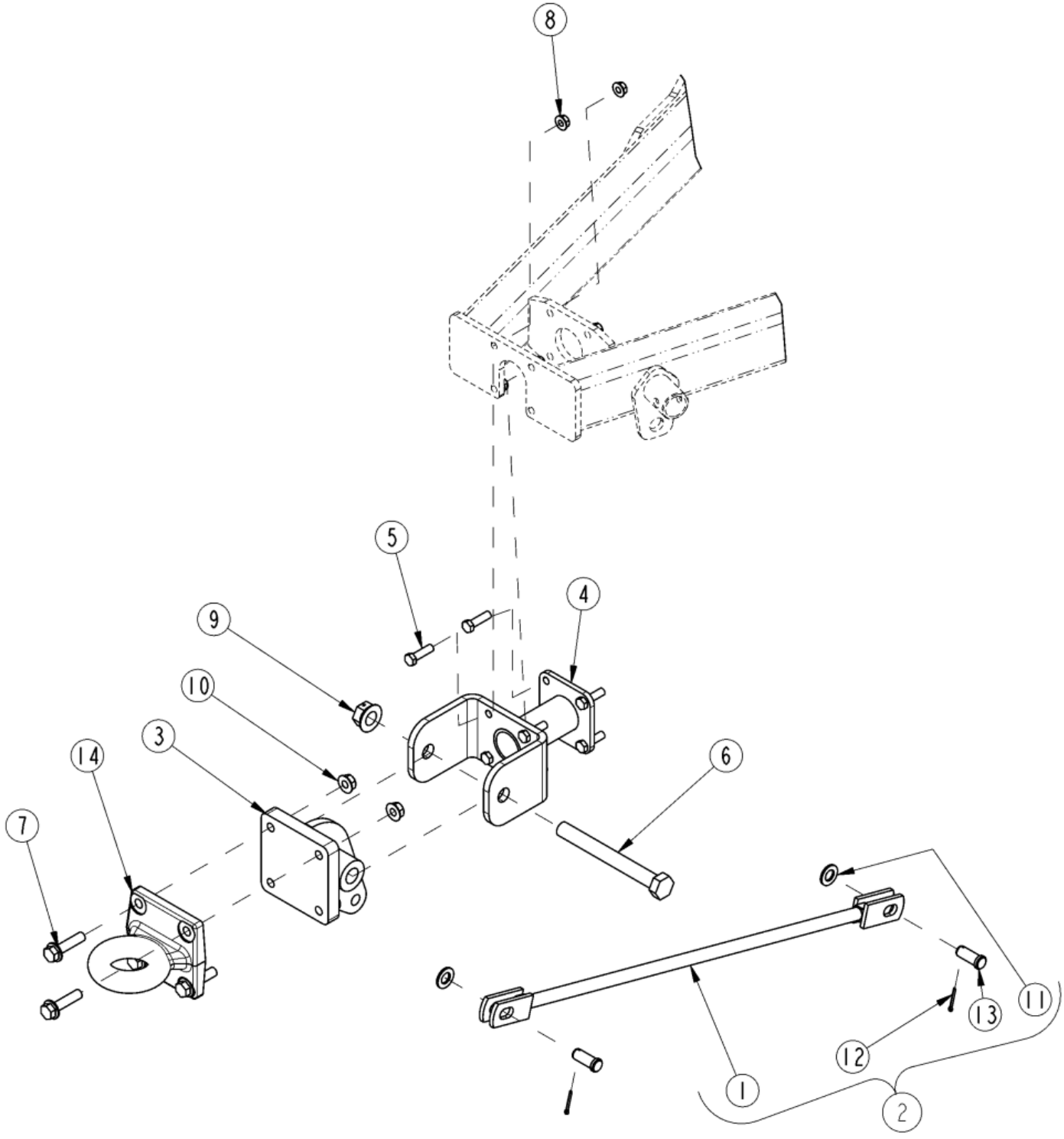

Hitch Pintle

Applies to Models: RC5610, RC6610, RCM5610, RCM6610

Ref.	Part No.	Part Description	Comments
	DWG 26570	Drawing Image Number	
	330-334A	PINTLE HITCH	Complete assembly
		*	
1	318-006H	WLDMT. CLEVIS LEVEL ROD	
2	318-053L	ASSY. LEVEL ROD CLEVIS	
3	318-556H	WLDMT. PINTLE HITCH CLEVIS	
4	330-223H	YOKE HITCH	
5	802-053C	HHCS 5/8-11X1 3/4 GR5	
6	802-877C	HHCS 1-8X9 GR8 SPTHD	
7	802-729C	HFS 5/8-11X2 1/2 GR8 PLT	
8	803-304C	NUT HEX WHIZ 5/8-11 PLT	
9	803-258C	NUT HEX FLG LOCK 1-8 GR B PLT	
10	803-304C	NUT HEX WHIZ 5/8-11 PLT	
11	804-025C	WASHER FLAT 3/4 SAE PLT	
12	805-045C	PIN COTTER 5/32 X 1 1/4 LG	
13	805-083C	PIN CLEVIS 3/4 X 1 1/2	
14	890-806C	PINTLE HOOK SQ.BASE BDB1250-15	

Hitch Standard Pivoting Clevis

Applies to Models: RC5610, RC6610, RCM5610, RCM6610

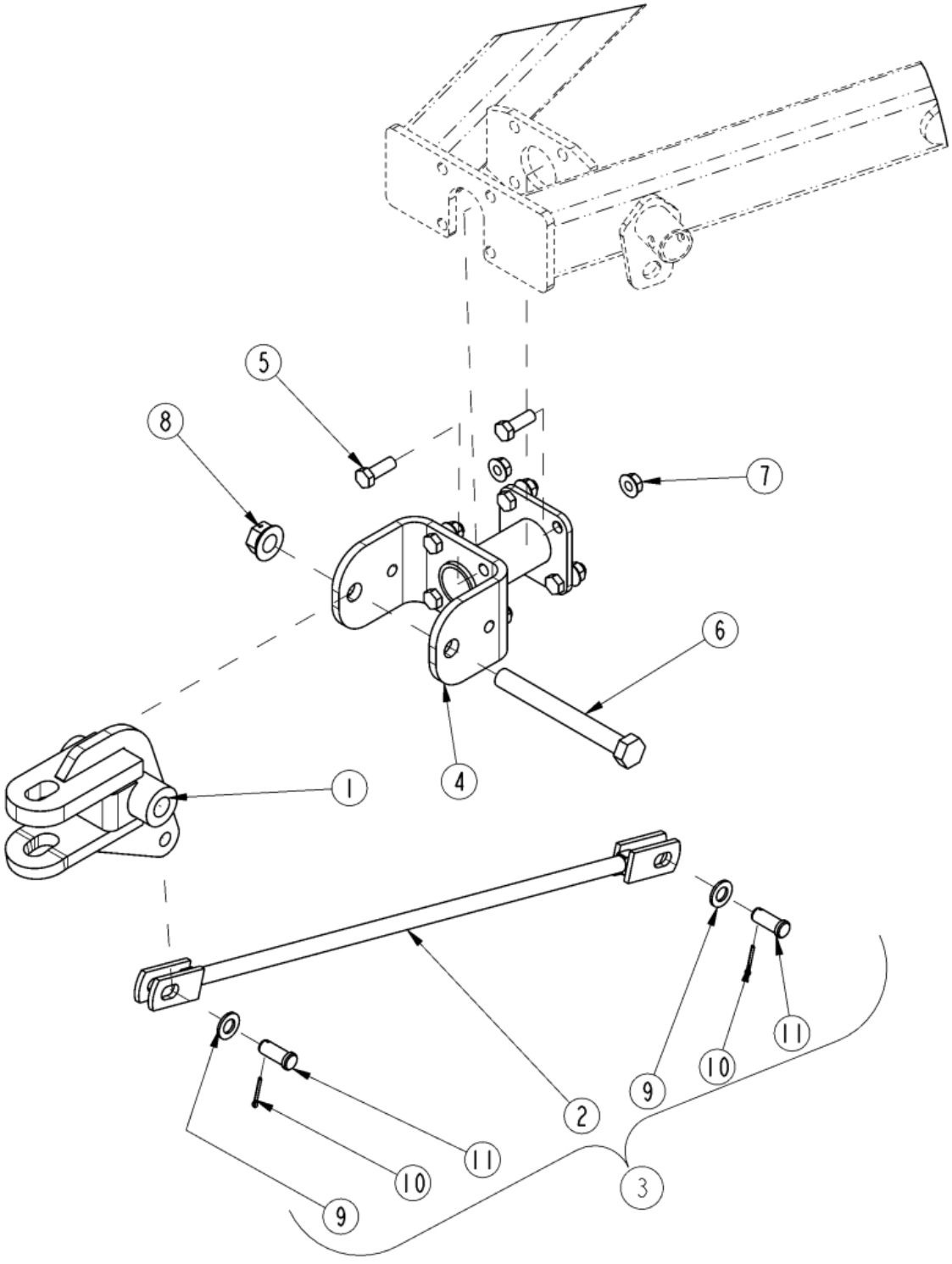

Hitch Standard Pivoting Clevis

Applies to Models: RC5610, RC6610, RCM5610, RCM6610

Ref.	Part No.	Part Description	Comments
	DWG 26557	Drawing Image Number	
	330-225A	STANDARD HITCH	Complete assembly
		*	
1	318-005H	WLDMT. TONGUE CLEVIS	
2	318-006H	WLDMT. CLEVIS LEVEL ROD	
3	318-053L	ASSY. LEVEL ROD CLEVIS	
4	330-223H	YOKE HITCH	
5	802-053C	HHCS 5/8-11X1 3/4 GR5	
6	802-877C	HHCS 1-8X9 GR8 SPTHD	
7	803-304C	NUT HEX WHIZ 5/8-11 PLT	
8	803-258C	NUT HEX FLG LOCK 1-8 GR B PLT	
9	804-025C	WASHER FLAT 3/4 SAE PLT	
10	805-045C	PIN COTTER 5/32 X 1 1/4 LG	
11	805-083C	PIN CLEVIS 3/4 X 1 1/2	

Leveling Rod & Wing Turnbuckle

Applies to Models: RC5610, RC6610, RCM5610, RCM6610

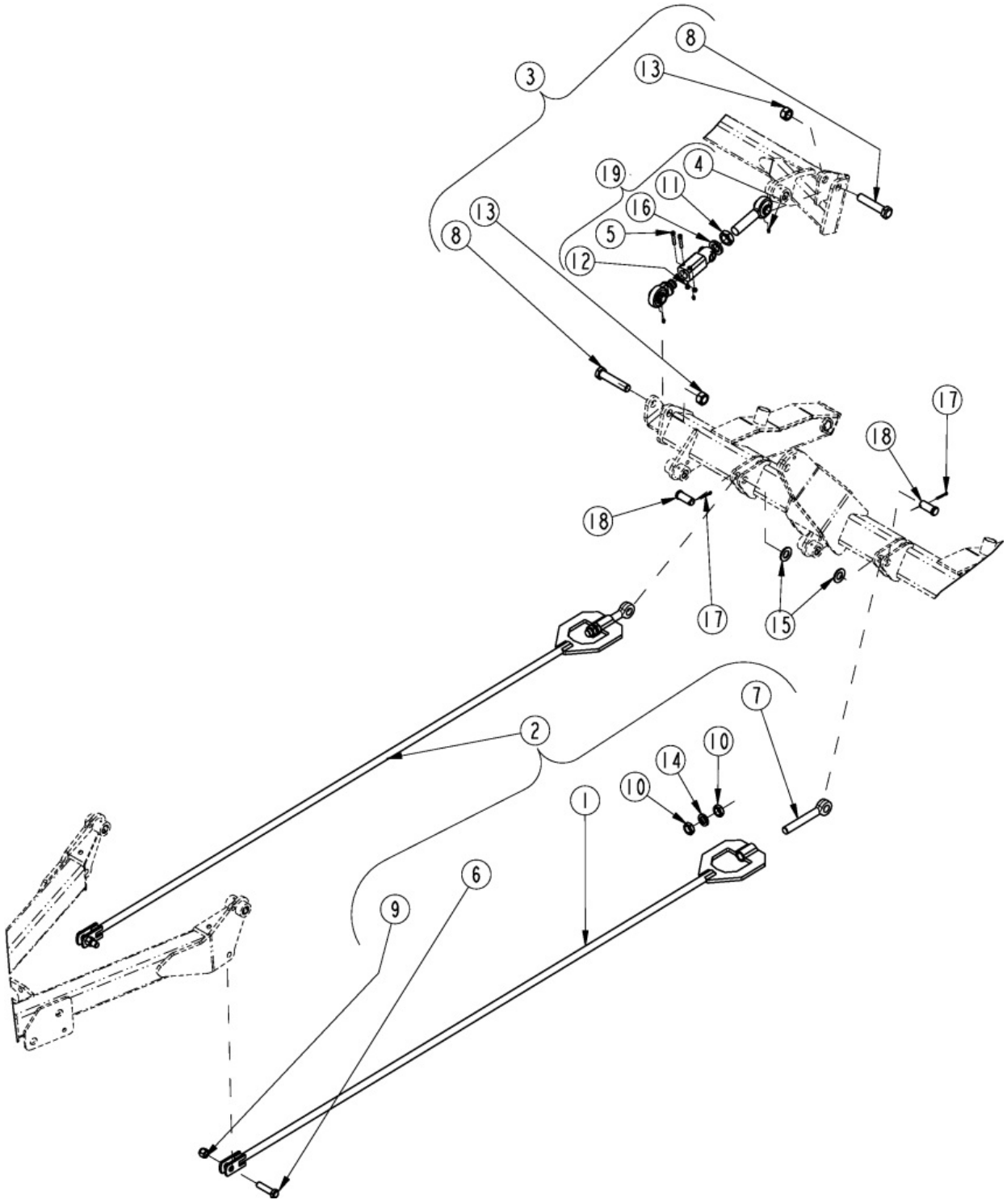

Leveling Rod & Wing Turnbuckle

Applies to Models: RC5610, RC6610, RCM5610, RCM6610

Ref.	Part No.	Part Description	Comments
	DWG26550	Drawing Image Number	
1	330-195H	LEVELING ROD	
2	330-196L	ASY LEVELING ROD	
3	330-224K	TURNBUCKLE KIT	
4	800-001C	GREASE ZERK STRAIGHT 1/4-28	
5	802-538C	HSHCS 5/16-18X1 3/4	
6	802-552C	HHCS 3/4-10X3 GR8	
7	802-754C	EYE BOLT 1-8X6 1/2 LG PLT SP	
8	802-915C	HHCS 1-8X5 GR8 PLT SPTHD	
9	803-025C	NUT HEX 3/4-10 PLT NYLOCK	
10	803-030C	NUT HEX JAM 1-8 PLT	
11	803-032C	NUT HEX JAM 1 1/4-7 PLT	
12	803-084C	NUT HEX NYLOCK 5/16-18 PLT	
13	803-316C	NUT HEX SIDE LOCK 1-8 PLT	
14	804-027C	WASHER LOCK SPRING 1 PLT	
15	804-029C	WASHER FLAT 1 SAE	
16	804-030C	WASHER LOCK 1 1/4 SPRING PLT	
17	805-104C	PIN COTTER 3/16 X 1 1/2 PLT	
18	805-374C	PIN CLEVIS 1 X 2 1/16 USABLE	
19	890-974C	TRNBCKL, 1BORE W/SWIVEL 9.5	

Off Center Lights 3 Inch (LED)

Applies to Models: RC5610, RC6610, RCM5610, RCM6610

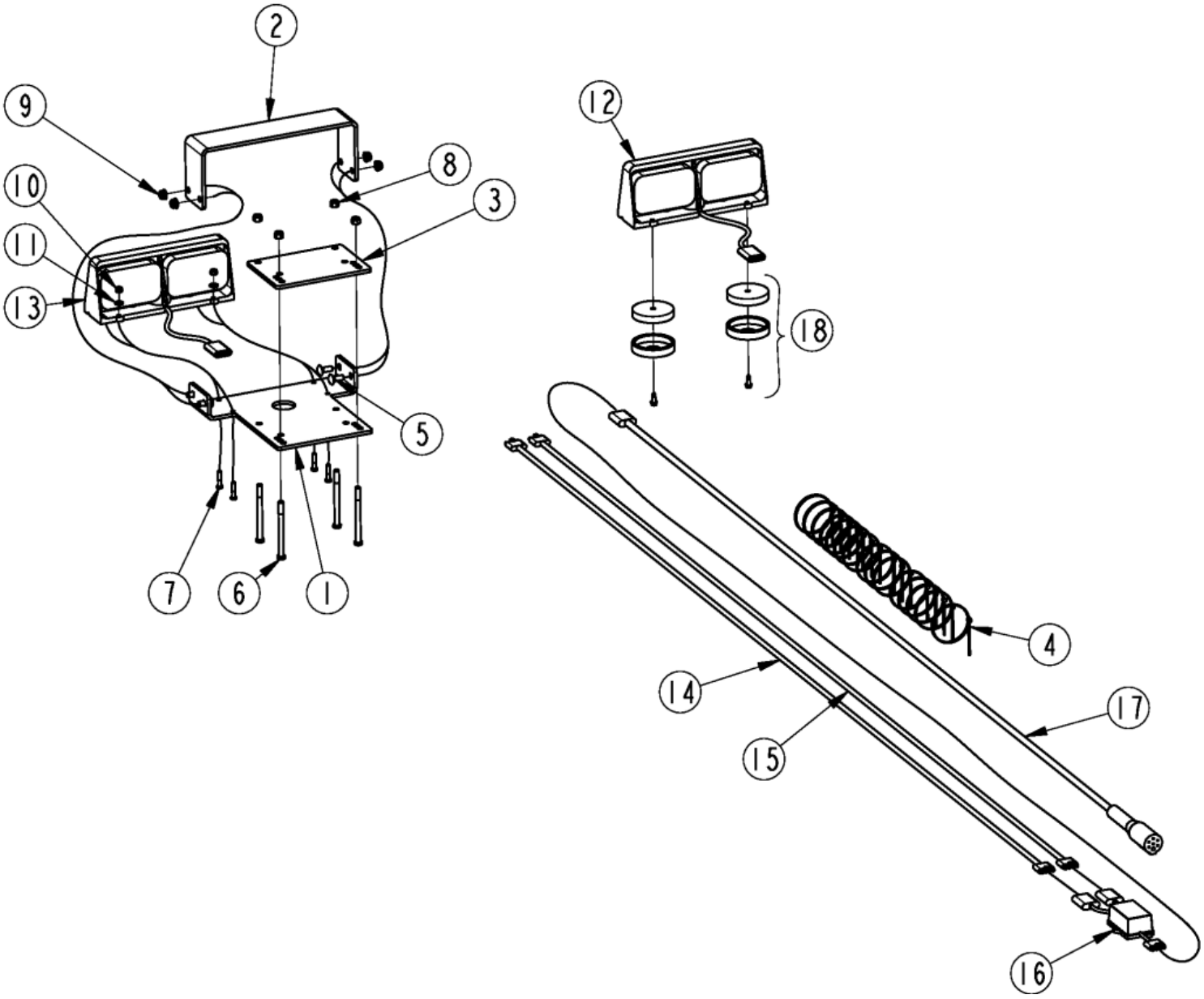

Off Center Lights 3 Inch (LED)

Applies to Models: RC5610, RC6610, RCM5610, RCM6610

Ref.	Part No.	Part Description	Comments
	DWG 39037	Image No.	
	334-496L	OFFSET CUTTER LIGHT KIT 3"	S/N D001092N+ Lights are now standard (Complete Assembly)
	331-682A	OFFSET CUTTER LIGHT KIT 3" *	S/N D001091N- Lights were optional
1	330-965D	LIGHT MNT	
2	330-966D	LIGHT GUARD	
3	330-967D	LIGHT MNT CLAMP	
4	800-060C	CABLE TIE .19X14.25 3DIA 50LB	
5	802-015C	RHSNB 3/8-16X1 GR5	
6	802-318C	HHCS 3/8-16X5 GR5	S/N _____+
6	802-027C	HHCS 3/8-16X4 1/2 GR5	S/N _____-
7	802-224C	HHCS 1/4-20X1 1/4 GR5	
8	803-078C	NUT LOCK 3/8-16 NYLON INSERT	
9	803-209C	NUT FLANGE LOCK 3/8-16 PLT	
10	803-255C	NUT HEX NYLOCK 1/4-20	
11	804-007C	WASHER FLAT 1/4 SAE PLT	
12	891-522C	DUAL LED LIGHT LH	Complete light assembly
12	J-37-R	RED LED LENS MODULE	Red lens
12	J-37-A	AMBER LED LENS MODULE	Amber lens
12	J-AC1-15-B	BLACK LENS COVER	Black lens
13	891-523C	DUAL LED LIGHT RH	Complete light assembly
13	J-37-R	RED LED LENS MODULE	Red lens
13	J-37-A	AMBER LED LENS MODULE	Amber lens
13	J-AC1-15-B	BLACK LENS COVER	Black lens
14	891-529C	RH LIGHT WIRE HARNESS 8'	
15	891-530C	LH LIGHT WIRE HARNESS 8'	
16	891-531C	ENHANCE MODULE	
17	891-532C	LEAD WIRE HARNESS 8'	
18	891-534C	LIGHT MAGNETS WITH HARDWARE	

Splitter Box Sliding Cover

Applies to Models: RC5610, RC6610, RCM5610, RCM6610

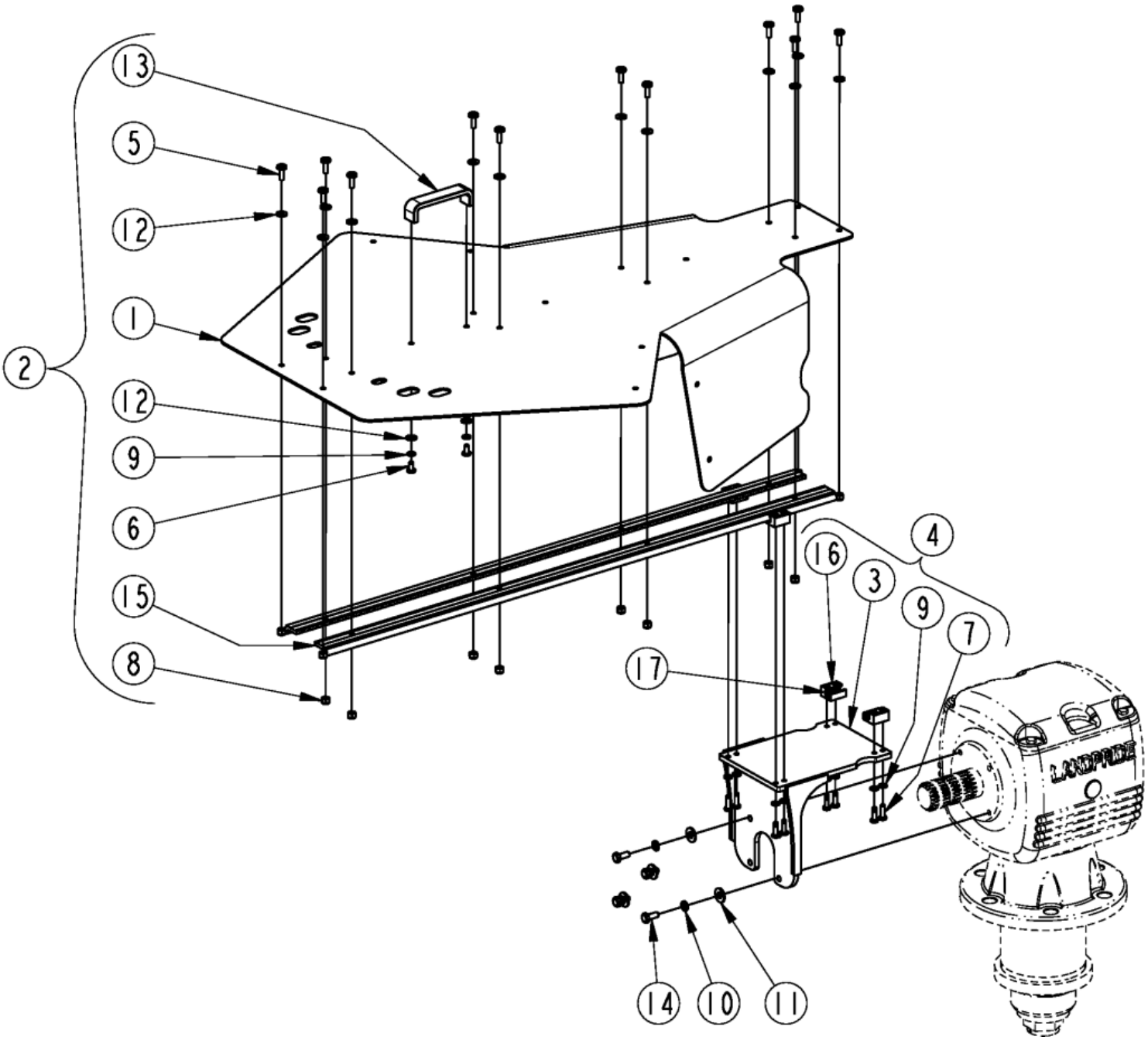

Splitter Box Sliding Cover

Applies to Models: RC5610, RC6610, RCM5610, RCM6610

Ref.	Part No.	Part Description	Comments
	DWG 37650	Image No.	
1	331-076D	SLIDING SHIELD	
2	331-552V	SLIDING SHIELD ASSY, 50 GB	
3	331-554H	SLIDING SHIELD GB MNT, 50/60GB	
4	331-555S	GEARBOX BEARING BLOCK MNT	
5	801-248C	PAN HD 1/4-20X3/4 PHILLIPS SS	
6	802-301C	HHCS 1/4-20X1/2 GR5	
7	802-843C	HHCS M6X1X20 18-8 SS	
8	803-255C	NUT HEX NYLOCK 1/4-20	
9	804-006C	WASHER LOCK SPRING 1/4 PLT	
10	804-009C	WASHER LOCK SPRING 5/16 PLT	
11	804-010C	WASHER FLAT 5/16 USS PLT	
12	804-034C	WASHER FLAT 1/4 SAE SS	
13	817-936C	HANDLE GRAB 4 1/8WIDE1 1/2TALL	
14	842-243C	HHCS M8X1.25X20 GR8.8 THD-LCK	
15	891-485C	WS-10 GUIDE RAIL	
16	891-487C	FLOATING ZINC BEARING BLOCK	With Liners
17	J200UM-01-10.4	REPLACEMENT LINER	

Weight Box

Applies to Models: RC5610, RC6610, RCM5610, RCM6610

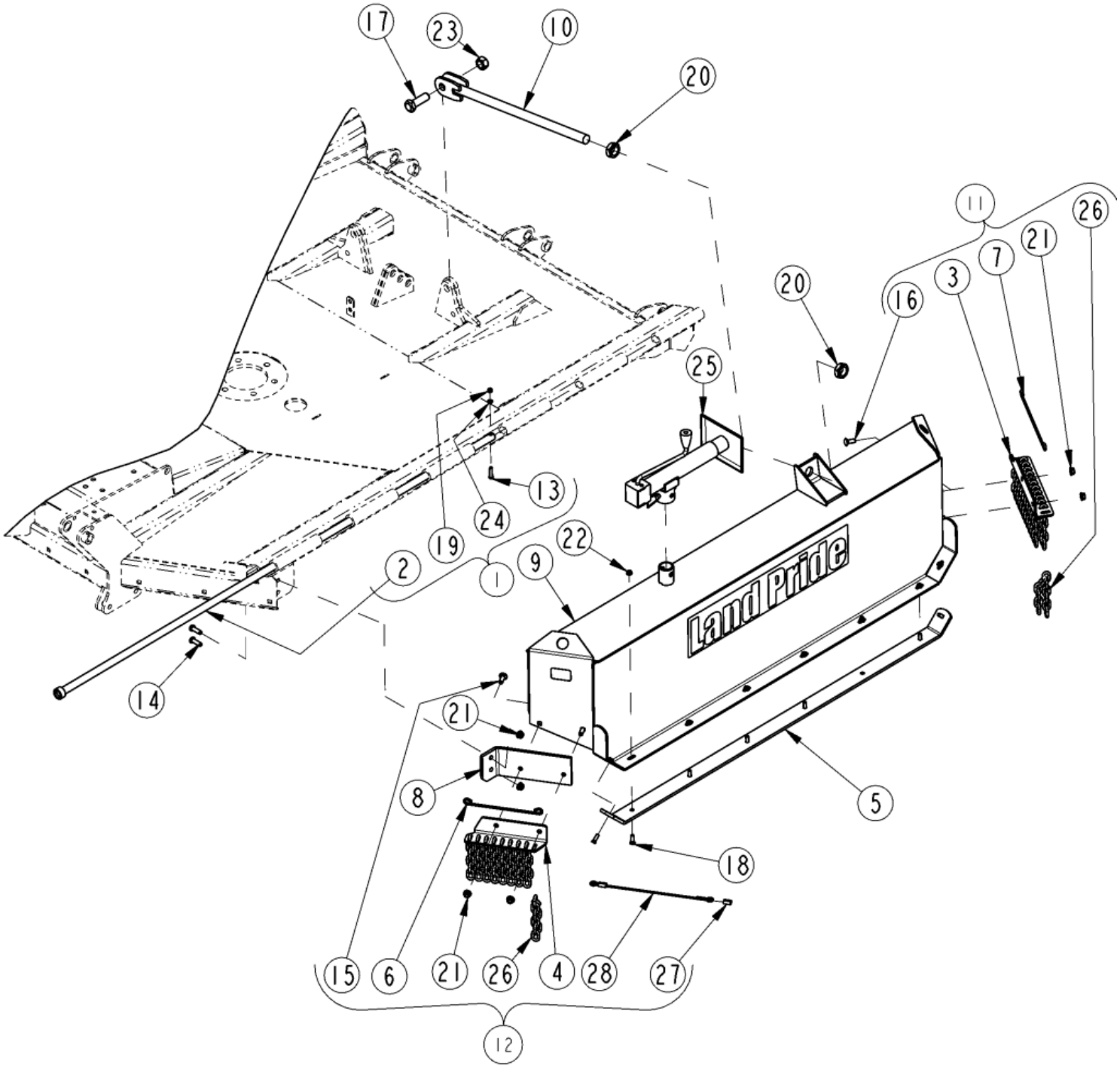

Weight Box

Applies to Models: RC5610, RC6610, RCM5610, RCM6610

Ref.	Part No.	Part Description	Comments
	DWG33297	Drawing Image Number	
1	318-695L	ASSY. HINGE ROD	
2	318-696H	WLDMT. HINGE ROD	
3	318-756D	CHAINGUARD, WEIGHT BOX REAR	
4	318-757D	CHAINGUARD, WEIGHT BOX FRT	
5	318-923D	SKID SHOE WTBX	
6	326-152D	ROUND ROD .25 X 14	
7	326-224D	ROUND ROD .25 X 16.50	
8	330-328D	LOCK, WEIGHTBOX FRT	
9	330-406H	WEIGHT BOX 56 SERIES LH	
10	330-410H	CLEVIS WEIGHTBOX LOCK	
11	330-919K	CHNGRD DBL REAR WGHTBX	
12	330-920K	CHNGRD CBL FRT WGHTBX	
13	802-022C	HHCS 3/8-16X1 1/2 GR5	
14	802-091C	HHCS 1/2-13X1 1/2 GR5	
15	802-106C	RHSNB 1/2-13X1 1/2 GR5	
16	802-214C	RHSNB 1/2-13X1 1/4 GR5	
17	802-368C	HHCS 1-8X3 GR5	
18	802-466C	PLOW 3/8-16X1 1/4 GR5	
19	803-014C	NUT HEX 3/8-16 PLT	
20	803-032C	NUT HEX JAM 1 1/4-7 PLT	
21	803-037C	NUT HEX WHIZ 1/2-13 PLT	
22	803-198C	NUT HEX WHIZ 3/8-16 PLT	
23	803-316C	NUT HEX SIDE LOCK 1-8 PLT	
24	804-013C	WASHER LOCK SPRING 3/8 PLT	
25	890-786C	SIDEWIND JACK 7000 LB	
26	891-208C	CHAIN WELD 5/16 PRF X 11-LINK	
27	891-236C	SWAGE CLAMP, 3/16 CABLE	
28	990-208R	AIRCRAFT CBL.3/16 7X7 GALV.	

Axle Center

Applies to Models: RC5610, RC6610, RCM5610, RCM6610

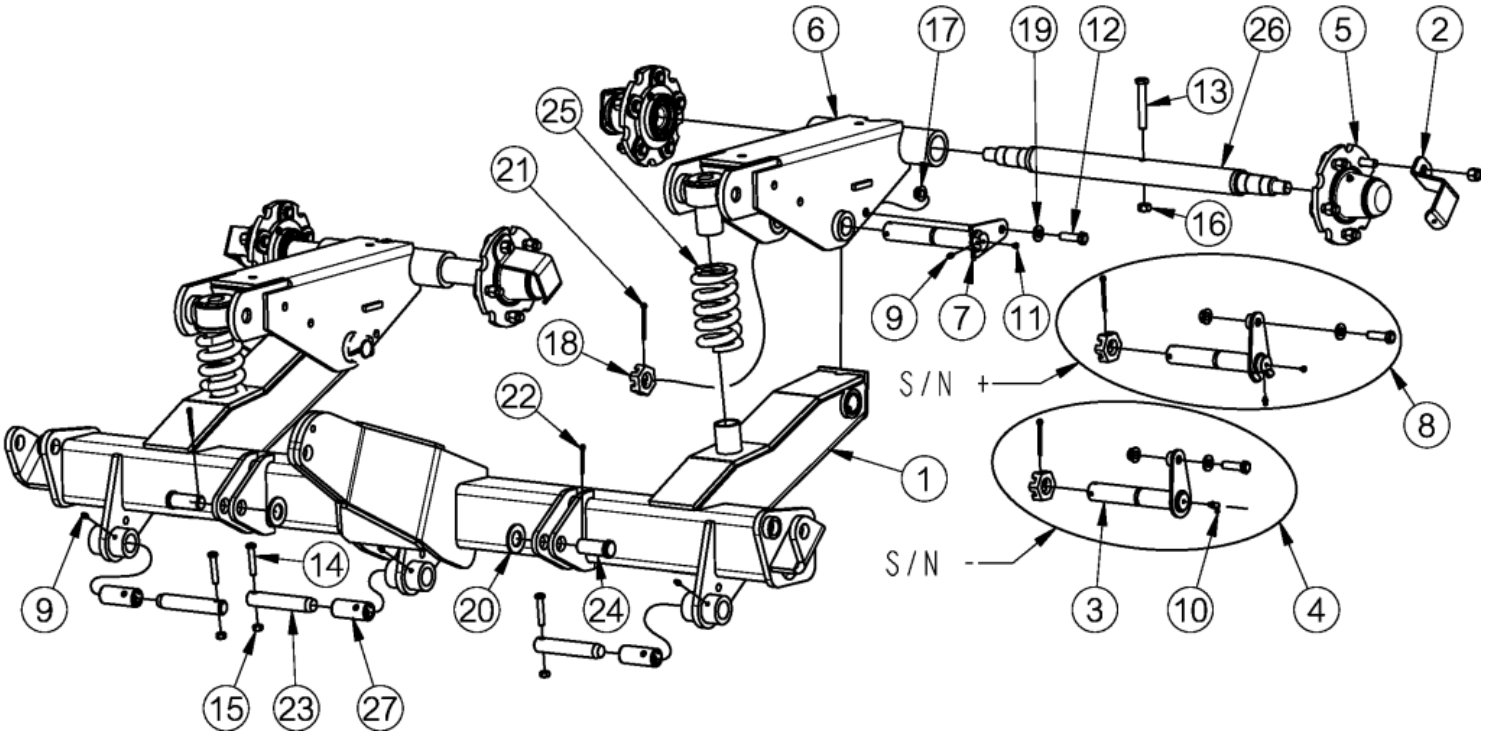

Axle Center

Applies to Models: RC5610, RC6610, RCM5610, RCM6610

Ref.	Part No.	Part Description	Comments
	DWG 37974	Image No.	
1	330-177H	AXLE CENTER STD	
2	330-331D	PROTECTOR DUST CAP	
3	330-607H	PIVOT PIN TRAILING ARM	S/N D001067N-
4	330-609S	ASY PIVOT PIN TRAILING ARM	S/N D001067N-
5	330-938K	HUB 5 BOLT COMPLETE	
6	331-099H	TRAILING ARM CENTER	
7	334-448H	TRAILING ARM PIVOT PIN	S/N D001068N+
8	334-449S	TRAILING ARM PIVOT PIN ASY	S/N D001068N+
9	800-001C	GREASE ZERK STRAIGHT 1/4-28	
10	800-073C	GREASE ZERK 1/4-28 X 90-DEG	S/N D001067N-
11	801-229C	SCREW SLOTTED HEX 1/4-28X3/16	S/N D001068N+
12	802-082C	HHCS 1/2-13X1 3/4 GR5 FTHD	
13	802-099C	HHCS 1/2 - 13 X 3 1/4 GR5	
14	802-143C	HHCS 3/8-16 X 2 GR5	
15	803-013C	NUT LOCK 3/8-16 PLT	
16	803-019C	NUT LOCK 1/2-13 PLT	
17	803-169C	NUT HEX FLG. LOCK 1/2-13 PLT	
18	803-381C	NUT HEX JAM SLOTTED 1 1/4-7	
19	804-016C	WASHER FLAT 1/2 SAE PLT	
20	804-029C	WASHER FLAT 1 SAE PLT	
21	805-058C	PIN COTTER 3/16 X 2z p	
22	805-104C	PIN COTTER 3/16 X 1 1/2 PLT	
23	805-292C	PIN 1.0X4.42 USBL HRD PLT	
24	805-374C	PIN CLEVIS 1 X 2 1/16 USABLE	
25	807-271C	SPRING COMP 3.20OD .63W 5.5L	
26	815-425C	SPINDLE, DUAL BOLT-ON 7/8-14	
27	890-970C	BUSHING 1.25ODX1.00IDX2.87	

Axle Center Tandem S/N D001113N-

Applies to Models: RC5610, RC6610, RCM5610, RCM6610

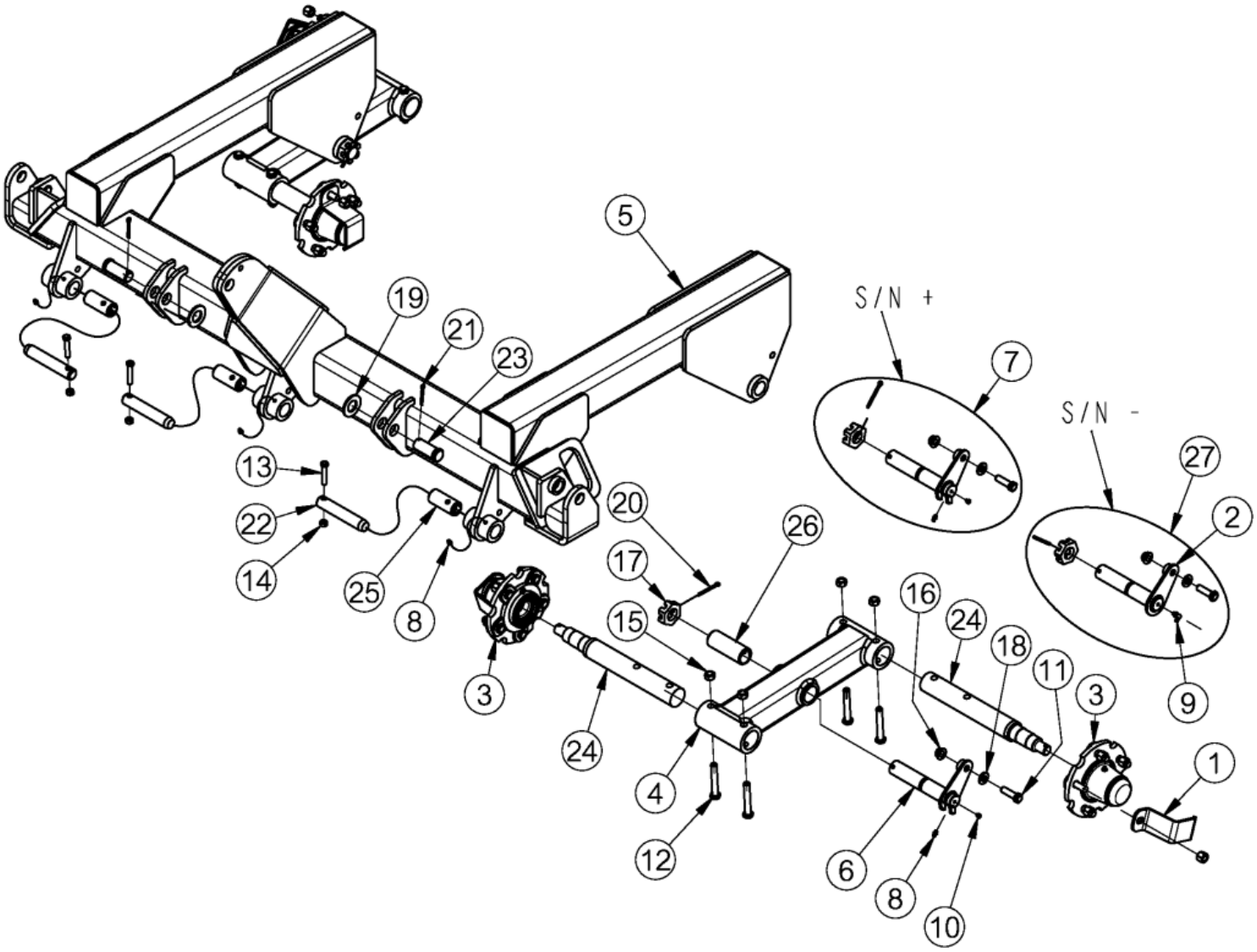

Axle Center Tandem S/N D001113N-

Applies to Models: RC5610, RC6610, RCM5610, RCM6610

Ref.	Part No.	Part Description	Comments
	DWG 39282	Image No.	
1	330-331D	PROTECTOR DUST CAP	
2	330-616H	PIVOT PIN TANDEM ARM	S/N D001067N-
3	330-938K	HUB 5 BOLT COMPLETE	
4	331-202H	TANDEM ARM, SHORT	
5	331-528H	CENTER WALKING TANDEM AXLE	
6	334-465H	WALKING TANDEM PIVOT PIN	S/N D001068N+
7	334-467S	WALKING TANDEM PIV PIN ASY	S/N D001068N+
8	800-001C	GREASE ZERK STRAIGHT 1/4-28	
9	800-073C	GREASE ZERK 1/4-28 X 90-DEG	S/N D001067N-
10	801-229C	SCREW SLOTTED HEX 1/4-28X3/16	S/N D001068N+
11	802-082C	HHCS 1/2-13X1 3/4 GR5 FTHD	
12	802-099C	HHCS 1/2 - 13 X 3 1/4 GR5	
13	802-143C	HHCS 3/8-16 X 2 GR5	
14	803-013C	NUT LOCK 3/8-16 PLT	
15	803-019C	NUT LOCK 1/2-13 PLT	
16	803-169C	NUT HEX FLG. LOCK 1/2-13 PLT	
17	803-381C	NUT HEX JAM SLOTTED 1 1/4-7	
18	804-016C	WASHER FLAT 1/2 SAE PLT	
19	804-029C	WASHER FLAT 1 SAE PLT	
20	805-058C	PIN COTTER 3/16 X 2z p	
21	805-104C	PIN COTTER 3/16 X 1 1/2 PLT	
22	805-292C	PIN 1.0X4.42 USBL HRD PLT	
23	805-374C	PIN CLEVIS 1 X 2 1/16 USABLE	
24	815-433C	SPINDLE, SINGLE BOLT-ON 7/8-14	
25	890-970C	BUSHING 1.25ODX1.00IDX2.87	
26	891-999C	BUSHING 1.50ODX1.25X3.93	S/N D001213N+
26	891-177C	BHG 1.50ODX1.25X1.38	S/N D001212N- (2 bushings required)
27	330-615S	ASY PIVOT PIN TANDEM ARM	S/N D001067N-

Axle Center Tandem S/N D001114N+

Applies to Models: RC5610, RC6610, RCM5610, RCM6610

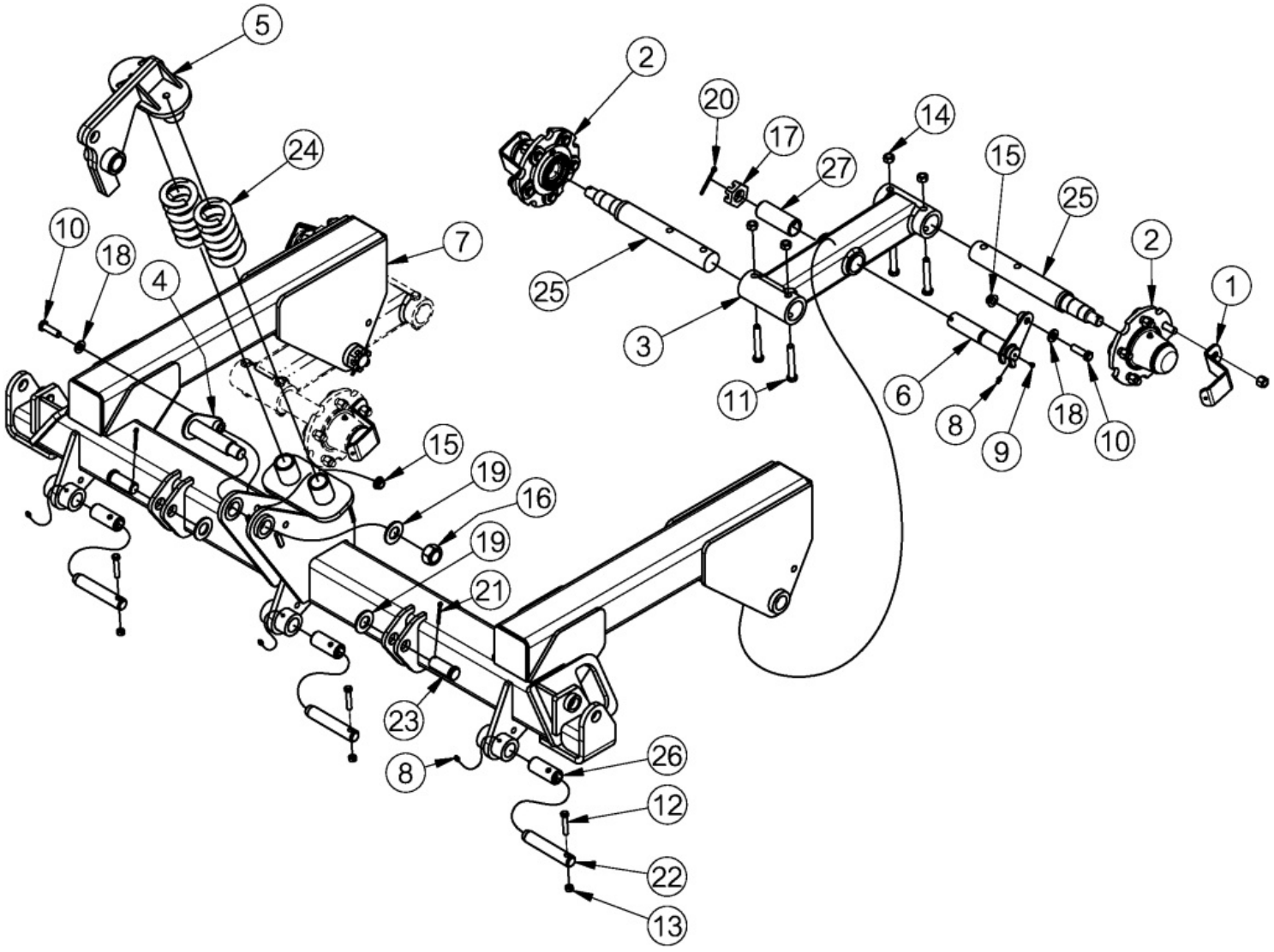

Axle Center Tandem S/N D001114N+

Applies to Models: RC5610, RC6610, RCM5610, RCM6610

Ref.	Part No.	Part Description	Comments
	DWG 70419	Image No.	
1	330-331D	PROTECTOR DUST CAP	
2	330-938K	HUB 5 BOLT COMPLETE	
3	331-202H	TANDEM ARM, SHORT	
4	331-709H	PIVOT PIN 4.5" USEABLE	
5	331-757H	CENTER SPRING ROCKER	
6	334-465H	WALKING TANDEM PIVOT PIN	
7	334-724H	CENTER WALKING TANDEM AXLE	
8	800-001C	GREASE ZERK STRAIGHT 1/4-28	
9	801-229C	SCREW SLOTTED HEX 1/4-28X3/16	
10	802-082C	HHCS 1/2-13X1 3/4 GR5 FTHD	
11	802-099C	HHCS 1/2 - 13 X 3 1/4 GR5	
12	802-143C	HHCS 3/8-16 X 2 GR5	
13	803-013C	NUT LOCK 3/8-16 PLT	
14	803-019C	NUT LOCK 1/2-13 PLT	
15	803-169C	NUT HEX FLG. LOCK 1/2-13 PLT	
16	803-316C	NUT HEX SIDE LOCK 1-8 PLT	
17	803-381C	NUT HEX JAM SLOTTED 1 1/4-7	
18	804-016C	WASHER FLAT 1/2 SAE PLT	
19	804-029C	WASHER FLAT 1 SAE PLT	
20	805-058C	PIN COTTER 3/16 X 2z p	
21	805-104C	PIN COTTER 3/16 X 1 1/2 PLT	
22	805-292C	PIN 1.0X4.42 USBL HRD PLT	
23	805-374C	PIN CLEVIS 1 X 2 1/16 USABLE	
24	807-271C	SPRING COMP 3.20OD .63W 5.5L	
25	815-433C	SPINDLE, SINGLE BOLT-ON 7/8-14	
26	890-970C	BUSHING 1.25ODX1.00IDX2.87	
27	891-999C	BUSHING 1.50ODX1.25X3.93	S/N D001213N+
27	891-177C	BHG 1.50ODX1.25X1.38	S/N D001212N- (2 bushings required)

Axle Wing

Applies to Models: RC5610, RC6610, RCM5610, RCM6610

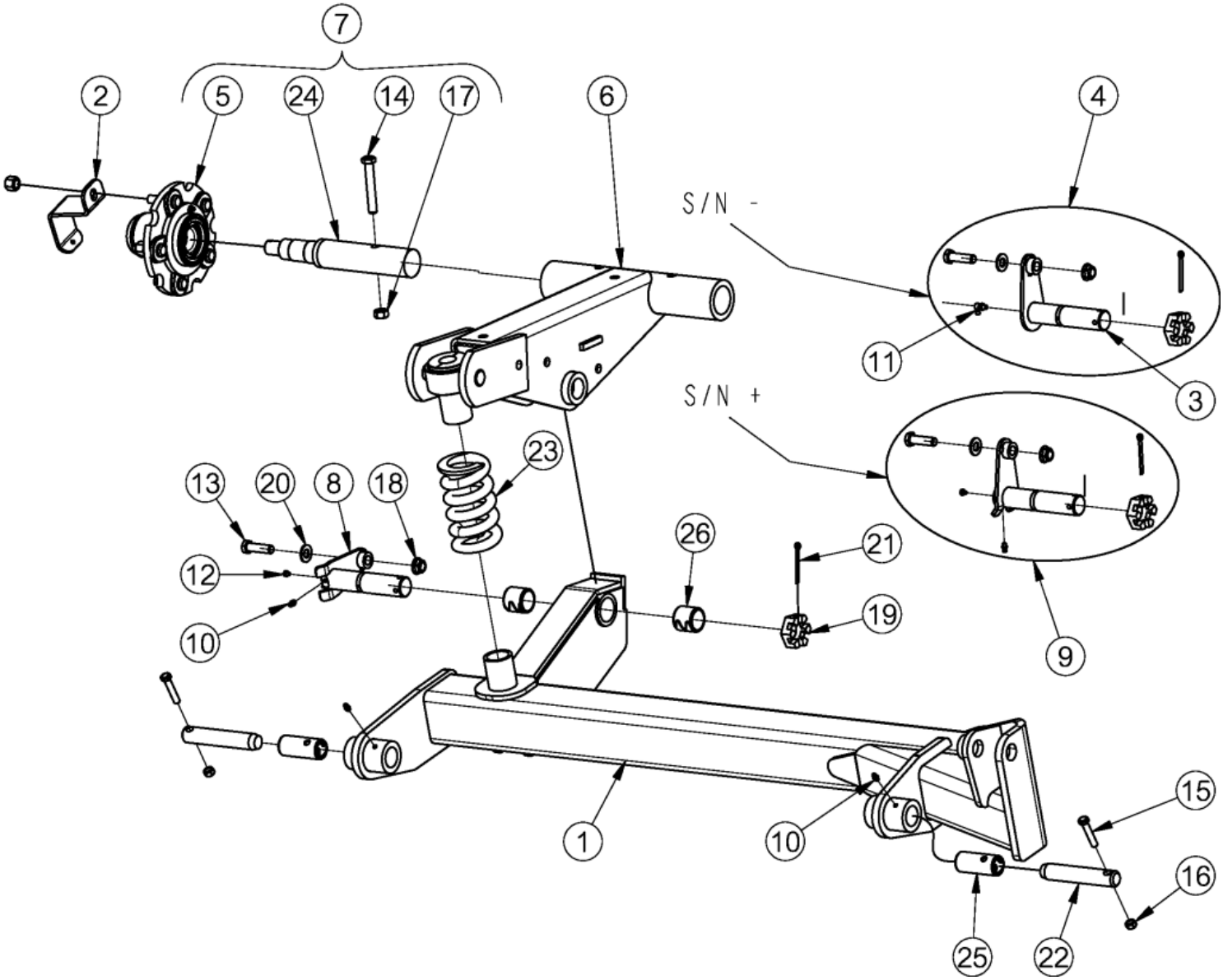

Axle Wing

Applies to Models: RC5610, RC6610, RCM5610, RCM6610

Ref.	Part No.	Part Description	Comments
	DWG 37975	Image No.	
1	330-181H	AXLE, WING STD RH	
2	330-331D	PROTECTOR DUST CAP	
3	330-608H	PIVOT PIN TRAILING ARM WG	S/N D001067N-
4	330-610S	ASY PIVOT PIN TRAIL ARM WG	S/N D001067N-
5	330-938K	HUB 5 BOLT COMPLETE	
6	331-794H	TRAILING ARM WING	
7	331-795L	SPINDLE AND HUB ASSY	
8	334-464H	WING TRAILING ARM PIVOT PIN	S/N D001068N+
9	334-466S	WING TRAILING ARM PIV PIN ASY	S/N D001068N+
10	800-001C	GREASE ZERK STRAIGHT 1/4-28	
11	800-073C	GREASE ZERK 1/4-28 X 90-DEG	S/N D001067N-
12	801-229C	SCREW SLOTTED HEX 1/4-28X3/16	S/N D001068N+
13	802-082C	HHCS 1/2-13X1 3/4 GR5 FTHD	
14	802-099C	HHCS 1/2 - 13 X 3 1/4 GR5	
15	802-143C	HHCS 3/8-16 X 2 GR5	
16	803-013C	NUT LOCK 3/8-16 PLT	
17	803-019C	NUT LOCK 1/2-13 PLT	
18	803-169C	NUT HEX FLG. LOCK 1/2-13 PLT	
19	803-381C	NUT HEX JAM SLOTTED 1 1/4-7	
20	804-016C	WASHER FLAT 1/2 SAE PLT	
21	805-058C	PIN COTTER 3/16 X 2z p	
22	805-292C	PIN 1.0X4.42 USBL HRD PLT	
23	807-271C	SPRING COMP 3.20OD .63W 5.5L	
24	815-491C	SINGLE AXLE SPINDLE, WING	
25	890-970C	BUSHING 1.25ODX1.00IDX2.87	
26	891-177C	BHG 1.50ODX1.25X1.38	

Hub Assembly (330-938K)

Applies to Models: RC5610, RC6610, RCM5610, RCM6610

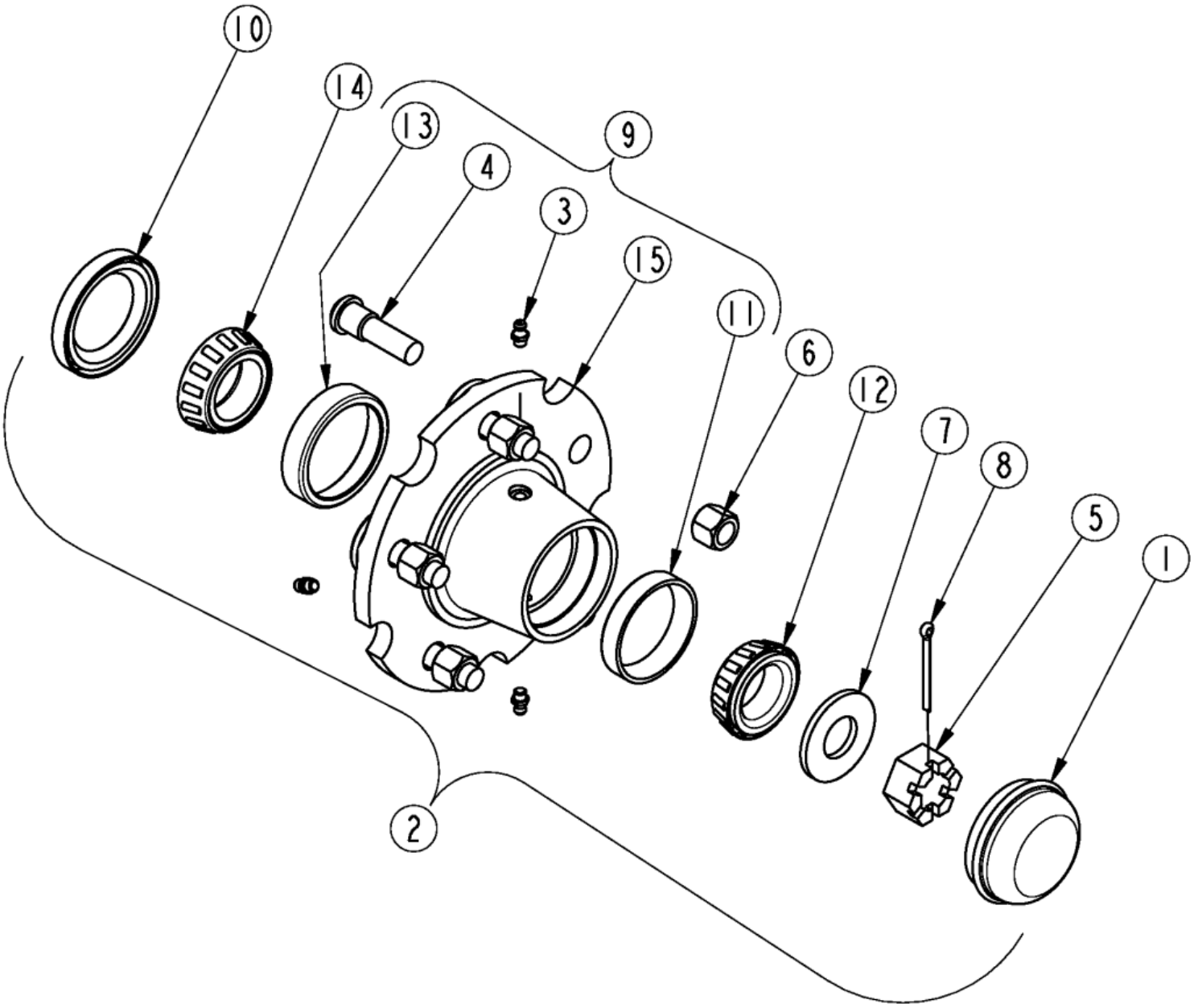

Hub Assembly (330-938K)

Applies to Models: RC5610, RC6610, RCM5610, RCM6610

Ref.	Part No.	Part Description	Comments
	DWG 37676	Image No.	
	330-938K	HUB 5 BOLT COMPLETE	
		*	
1	200-001D	HUB GREASE CAP	
2	330-938K	HUB 5 BOLT COMPLETE	
3	800-080C	GREASE ZERK 1/4-28 THD FORMING	
4	802-779C	HUB STUD 1/2-20X1.88 GR5	
5	803-029C	NUT HEX SLOTTED 7/8-14 PLT	
6	803-310C	NUT HEX 1/2-20 X 5/8 HIGH	
7	804-055C	WASHER SPINDLE - 7/8	
8	805-246C	PIN COTTER 5/32 X 1 3/4 LG	
9	815-243C	HUB 5-BOLT W/CUPS/STUDS	
10	816-497C	SEAL 1.75ID CR17617	
11	822-020C	BRG CUP LM-67010	
12	822-021C	BRG CONE 1.25ID LM-67048	
13	822-033C	BRG CUP LM-48510	
14	822-034C	BRG CONE LM-48548	
15	815-242C	HUB 5-BOLT CASTING	

Rotary Cutter Tire Options

Applies to Models: RC5610, RC6610, RCM5610, RCM6610

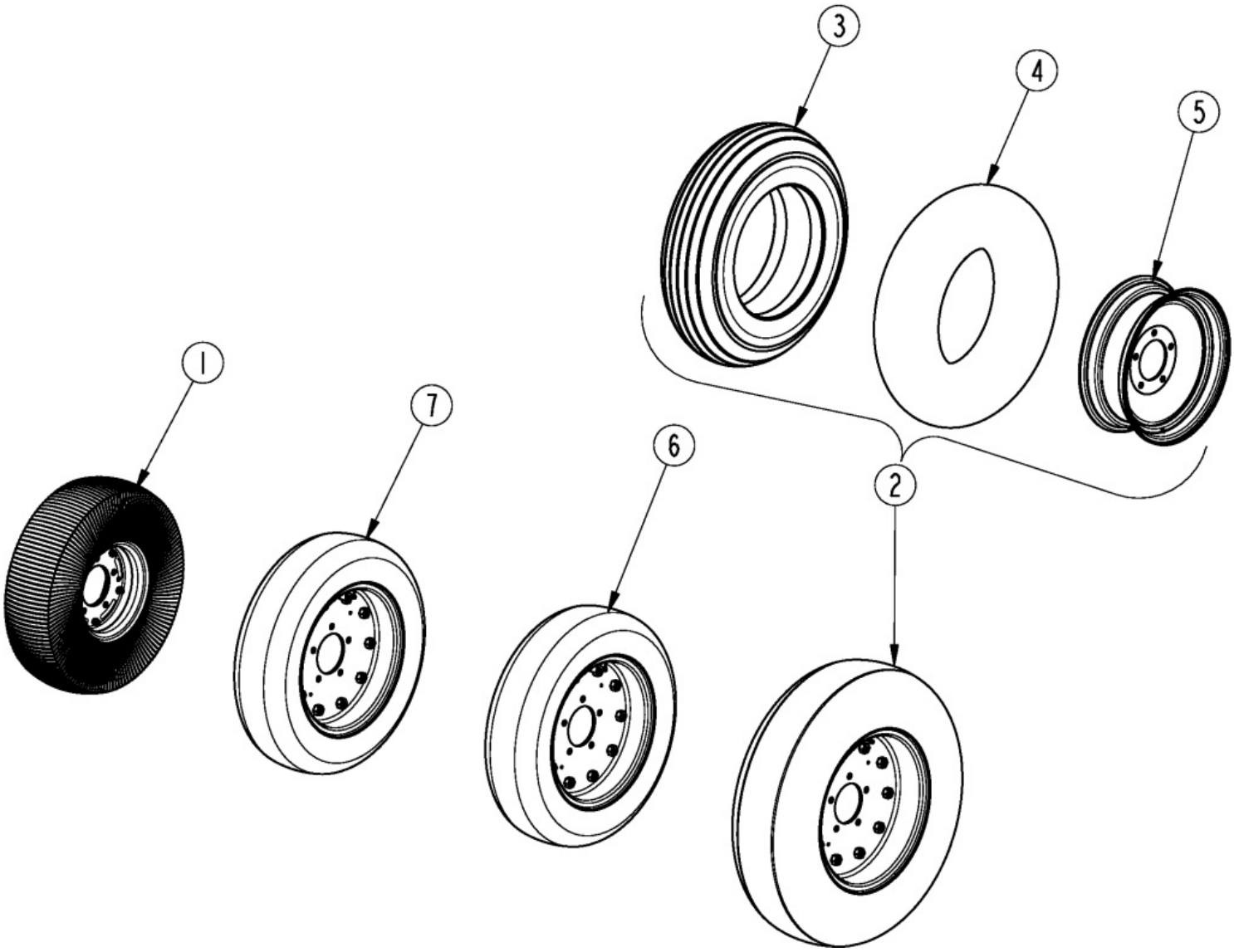

Rotary Cutter Tire Options

Applies to Models: RC5610, RC6610, RCM5610, RCM6610

Ref.	Part No.	Part Description	Comments
	DWG 37659	Image No.	
1	814-265C	TIRE & WHL LAM. 6X9X21(5-BOLT)	
2	814-449C	TIRE, AC 29" 16 PLY 5 BOLT	
3	814-450C	TIRE H29X9.0X15 USED	
4	814-451C	TUBE FOR 29X9.0-15	
5	814-461C	RIM 2PC 5BLT 15X6.5	
6	814-478C	NEW TIRE FF 25.5X8-14 20PLY	
7	814-480C	NEW TIRE 25.5X8-14 20PLY	

Guards Chain Double Row Front

Applies to Models: RC5610, RC6610, RCM5610, RCM6610

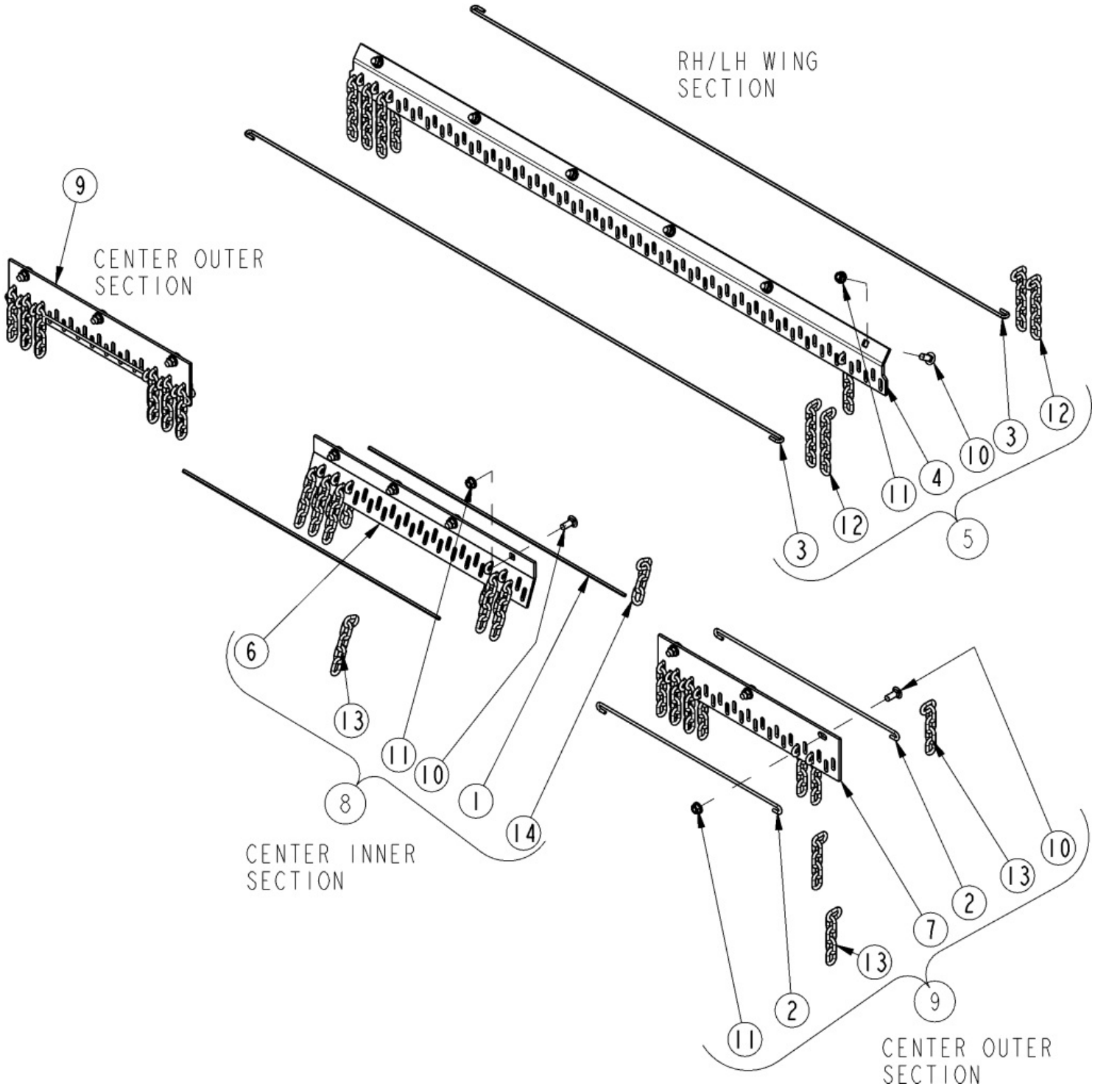

Guards Chain Double Row Front

Applies to Models: RC5610, RC6610, RCM5610, RCM6610

Ref.	Part No.	Part Description	Comments
	DWG26545	Drawing Image Number	
	330-514A	CHAINGUARD DOUBLE FRONT *	Complete assembly
1	326-099D	ROUND ROD 1/4 X 32	
1	318-107D	RPBY 326-099D	
2	318-337D	ROUND ROD 1/4 X 25	
3	318-617D	ROUND ROD .25 X 68.50	
4	318-636D	CHAINGUARD, DBL FR WING	
5	318-707K	CHAINGUARD, DBL FRT WING	
6	318-932D	CHAINGUARD DBL FRT CTR INNER	
7	318-966D	CHNGRD, DBL FRT CTR OUTER	
8	330-238K	CHNGRD DBL FRT CTR INNER	
9	330-274K	CHNGRD DBL FRT CTR OUTER	
10	802-214C	RHSNB 1/2-13X1 1/4 GR5	
11	803-037C	NUT HEX WHIZ 1/2-13 PLT	
12	890-175C	CHAIN 5/16 PROOF X 6 LINKS PLT	
13	890-341C	CHAIN WELD 5/16 PROOF X 5 LINK	
14	890-400C	CHAIN WELD 5/16 PROOF X 4 LINK	

Guards Chain Double Row Rear

Applies to Models: RC5610, RC6610, RCM5610, RCM6610

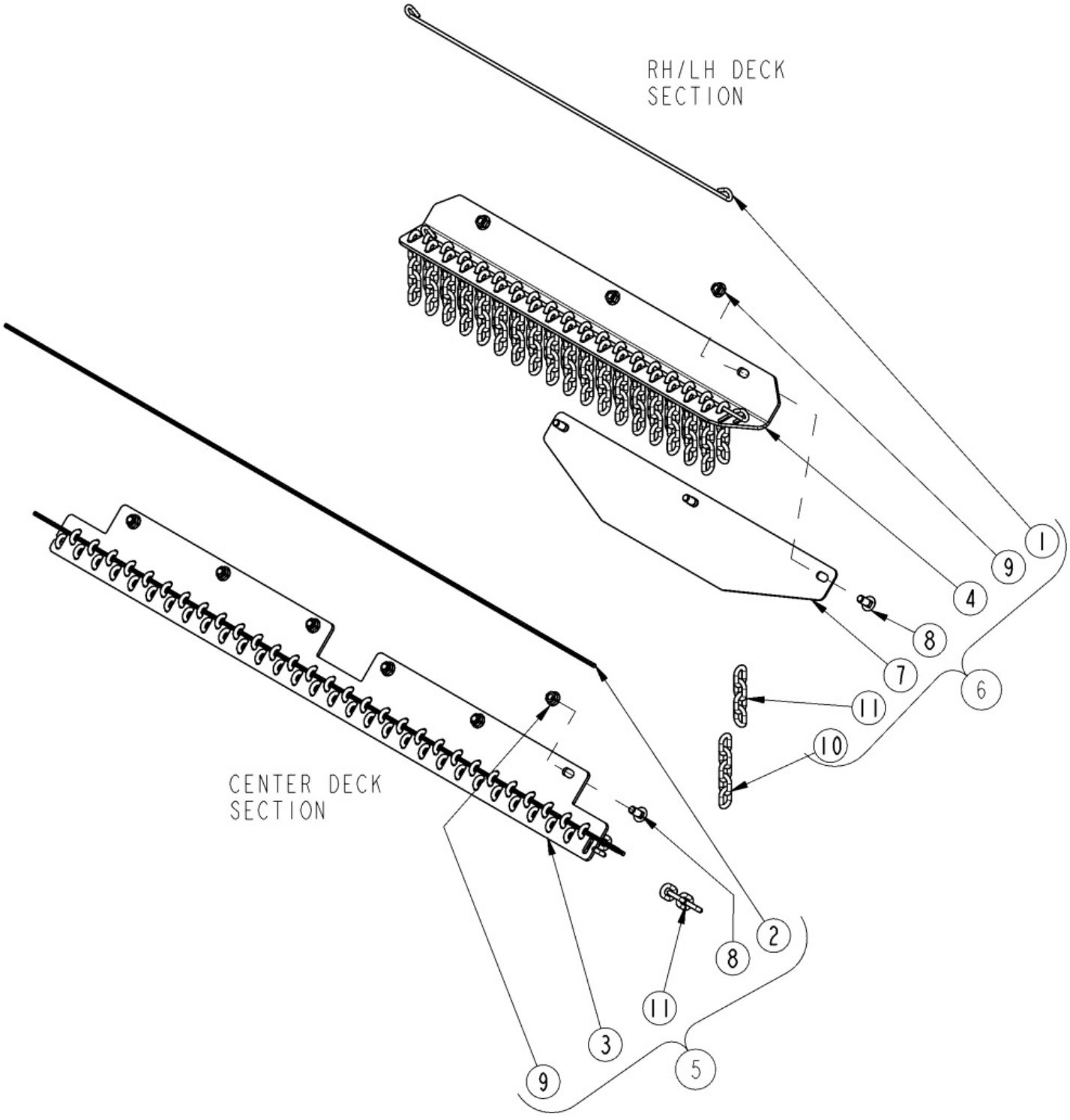

Guards Chain Double Row Rear

Applies to Models: RC5610, RC6610, RCM5610, RCM6610

Ref.	Part No.	Part Description	Comments
	DWG26547	Drawing Image Number	
	330-526A	CHAINGUARD DOUBLE REAR *	Complete assembly
1	326-535D	ROUND ROD 1/4 X 37 3/4	
1	318-108D	RPBY 326-535D	
2	318-478D	ROUND ROD .25 X 59	
3	318-930D	CHAINGUARD DBL REAR CTR	
4	330-051D	CHNGRD DBL REAR WING RH	
5	330-235K	CHNGRD DBL REAR CTR	
6	330-450K	CHNGRD DBL REAR WING RH	
7	330-597D	CHAIN REV. DEFLECTOR REAR WING	
8	802-214C	RHSNB 1/2-13X1 1/4 GR5	
9	803-037C	NUT HEX WHIZ 1/2-13 PLT	
10	890-341C	CHAIN WELD 5/16 PROOF X 5 LINK	
11	890-400C	CHAIN WELD 5/16 PROOF X 4 LINK	

Guards Chain Single Row Front

Applies to Models: RC5610, RC6610, RCM5610, RCM6610

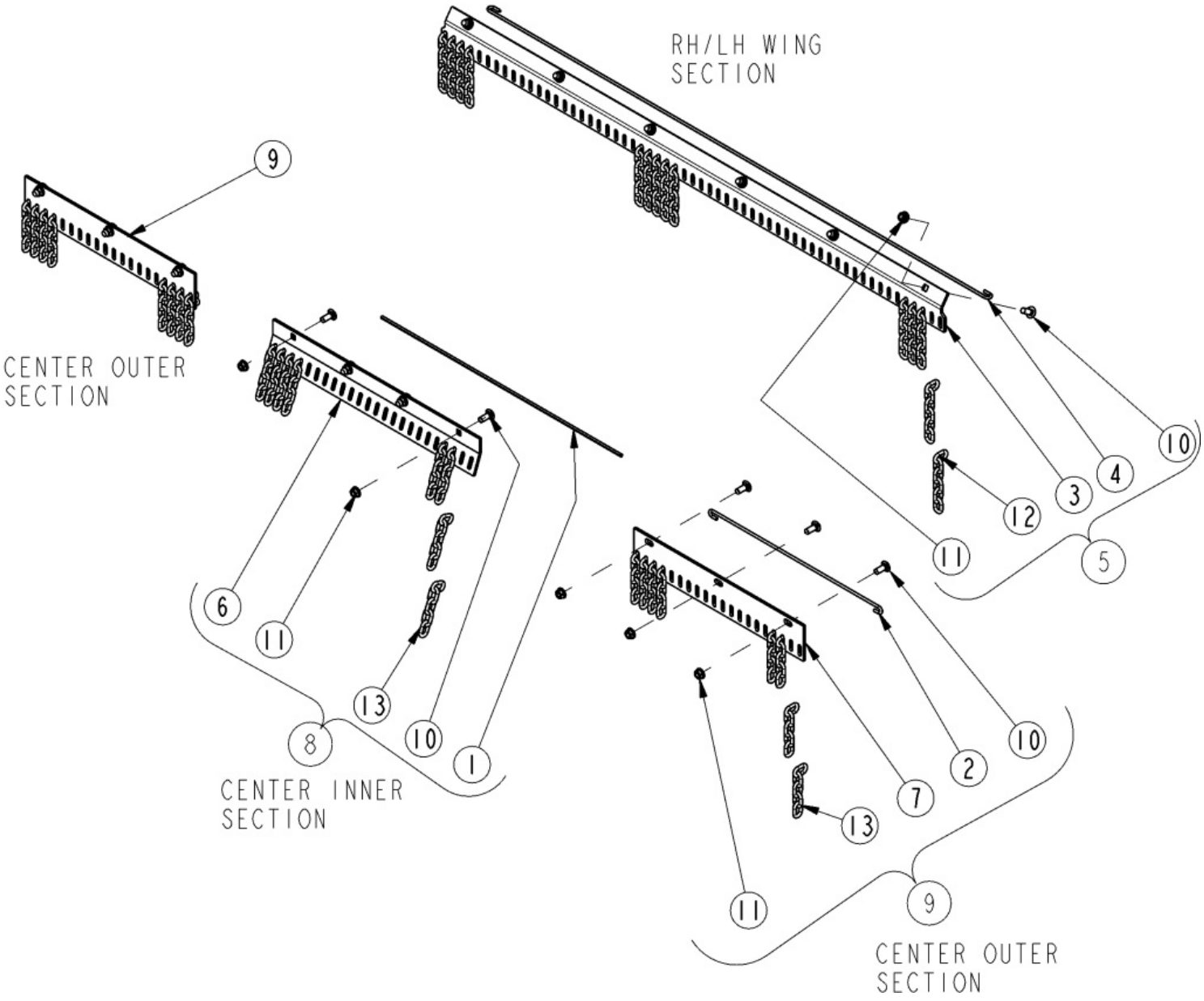

Guards Chain Single Row Front

Applies to Models: RC5610, RC6610, RCM5610, RCM6610

Ref.	Part No.	Part Description	Comments
	DWG26543	Drawing Image Number	
	330-512A	CHAINGUARD SINGLE FRONT *	Complete assembly
1	326-099D	ROUND ROD 1/4 X 32	
1	318-107D	RPBY 326-099D	
2	318-337D	ROUND ROD 1/4 X 25	
3	318-606D	CHAINGUARD, SGL FR WING	
4	318-617D	ROUND ROD .25 X 68.50	
5	318-620K	CHAINGUARD, SGL FRT WING	
6	318-931D	CHAINGUARD SGL FRT CTR INNER	
7	318-965D	CHNGRD, SGL FRT CTR OUTER	
8	330-237K	CHNGRD SGL FRT CTR INNER	
9	330-273K	CHNGRD SGL FRT CTR OUTER	
10	802-214C	RHSNB 1/2-13X1 1/4 GR5	
11	803-037C	NUT HEX WHIZ 1/2-13 PLT	
12	890-175C	CHAIN 5/16 PROOF X 6 LINKS PLT	
13	890-341C	CHAIN WELD 5/16 PROOF X 5 LINK	

Guards Chain Single Row Rear

Applies to Models: RC5610, RC6610, RCM5610, RCM6610

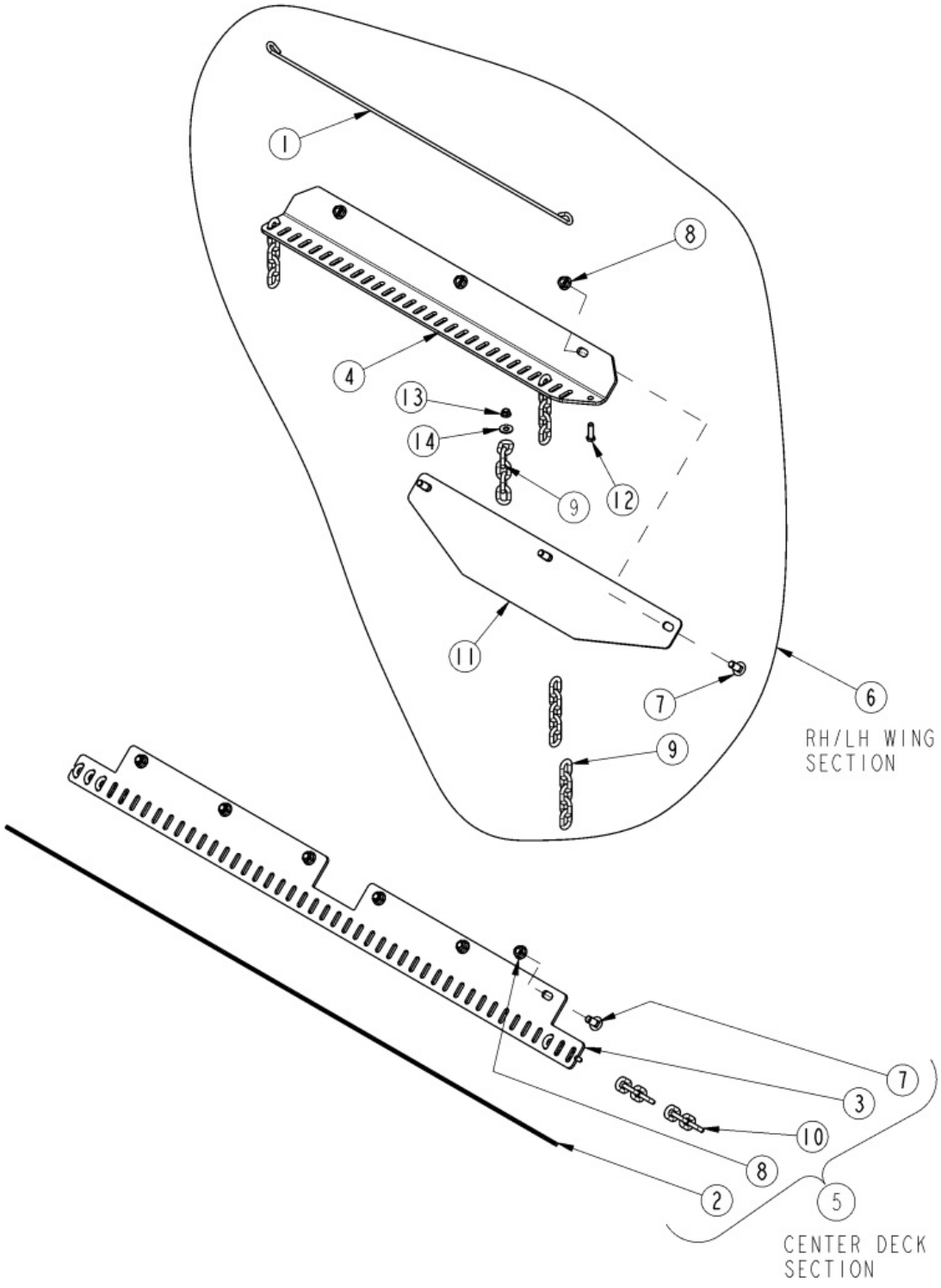

Guards Chain Single Row Rear

Applies to Models: RC5610, RC6610, RCM5610, RCM6610

Ref.	Part No.	Part Description	Comments
	DWG 26544	Drawing Image Number	
	330-524A	CHAINGUARD SINGLE REAR *	Complete assembly
1	326-535D	ROUND ROD 1/4 X 37 3/4	
1	318-108D	RPBY 326-535D	
2	318-478D	ROUND ROD .25 X 59	
3	318-929D	CHAINGUARD SGL REAR CTR	
4	330-050D	CHNGRD SGL REAR WING RH	
5	330-234K	CHNGRD SGL REAR CTR	
6	330-449K	CHNGRD SGL REAR WING RH	
7	802-214C	RHSNB 1/2-13X1 1/4 GR5	
8	803-037C	NUT HEX WHIZ 1/2-13 PLT	
9	890-341C	CHAIN WELD 5/16 PROOF X 5 LINK	
10	890-400C	CHAIN WELD 5/16 PROOF X 4 LINK	
11	330-597D	CHAIN REV. DEFLECTOR REAR WING	
12	802-079C	HHCS 3/8-16X1 1/4 GR5	
13	803-209C	NUT FLANGE LOCK 3/8-16 PLT	
14	804-011C	WASHER FLAT 3/8 USS PLT	

Guards Chain W/ Cable Front

Applies to Models: RC5610, RC6610, RCM5610, RCM6610

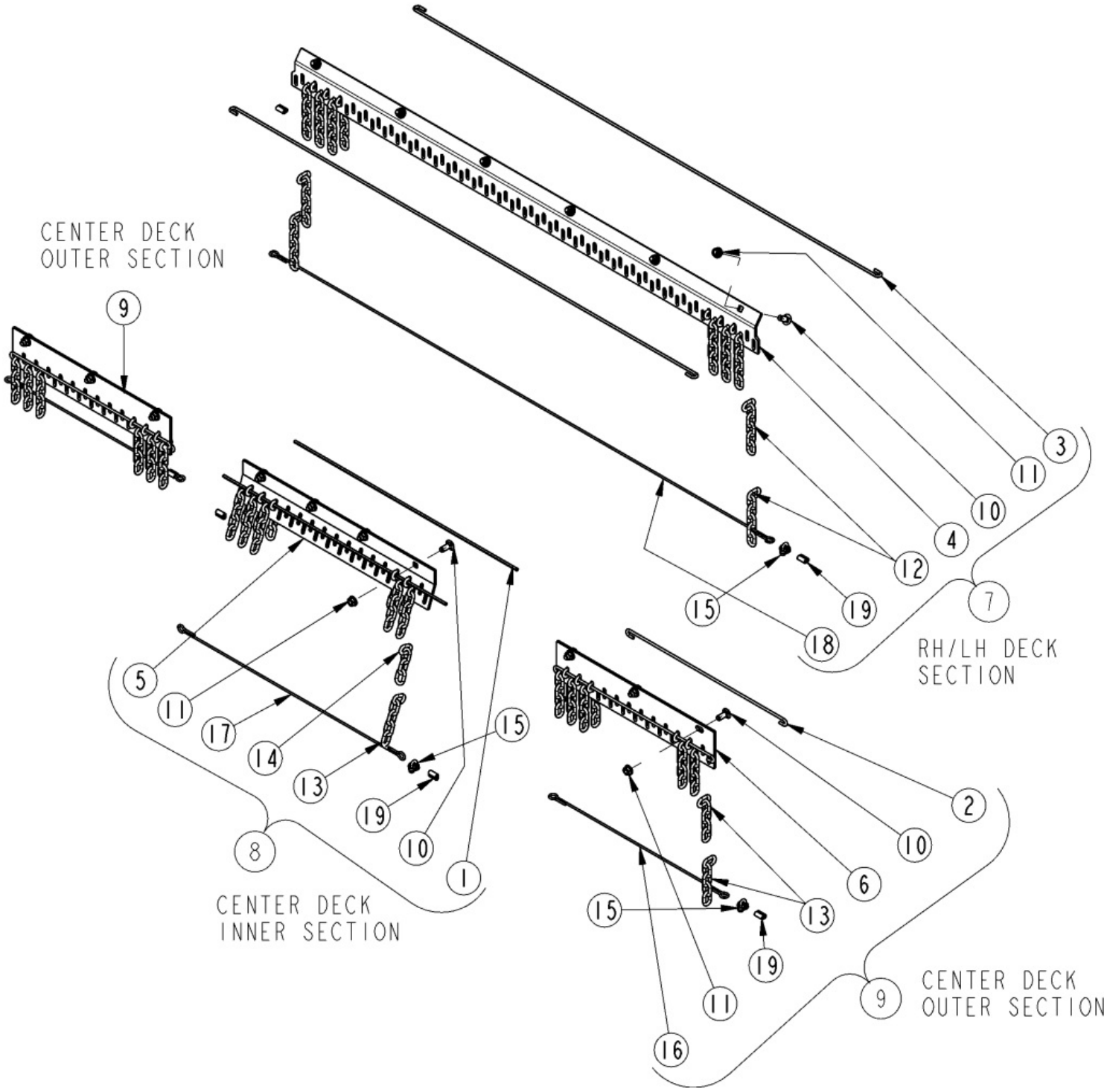

Guards Chain W/ Cable Front

Applies to Models: RC5610, RC6610, RCM5610, RCM6610

Ref.	Part No.	Part Description	Comments
	DWG26548	Drawing Image Number	
	330-515A	CHAINGUARD CABLE FRONT *	Complete assembly
1	326-099D	ROUND ROD 1/4 X 32	
1	318-107D	RPBY 326-099D	
2	318-337D	ROUND ROD 1/4 X 25	
3	318-617D	ROUND ROD .25 X 68.50	
4	318-636D	CHAINGUARD, DBL FR WING	
5	318-932D	CHAINGUARD DBL FRT CTR INNER	
6	318-966D	CHNGRD, DBL FRT CTR OUTER	
7	330-155K	CHAINGUARD, FRT CBL WING	
8	330-239K	CHNGRD CBL FRT CTR INNER	
9	330-275K	CHNGRD CBL FRT CTR OUTER	
10	802-214C	RHSNB 1/2-13X1 1/4 GR5	
11	803-037C	NUT HEX WHIZ 1/2-13 PLT	
12	890-175C	CHAIN 5/16 PROOF X 6 LINKS PLT	
13	890-341C	CHAIN WELD 5/16 PROOF X 5 LINK	
14	890-400C	CHAIN WELD 5/16 PROOF X 4 LINK	
15	890-672C	U-BOLT WIRE ROPE CLP 3/16 GAL.	Alternate
16	990-208R	AIRCRAFT CBL.3/16 7X7 GALV.	5' Required
17	990-208R	AIRCRAFT CBL.3/16 7X7 GALV.	6' Required
18	990-208R	AIRCRAFT CBL.3/16 7X7 GALV.	2' Required
19	891-236C	SWAGE CLAMP, 3/16 CABLE	Or Use 890-672C

Guards Chains W/ Cable Rear

Applies to Models: RC5610, RC6610, RCM5610, RCM6610

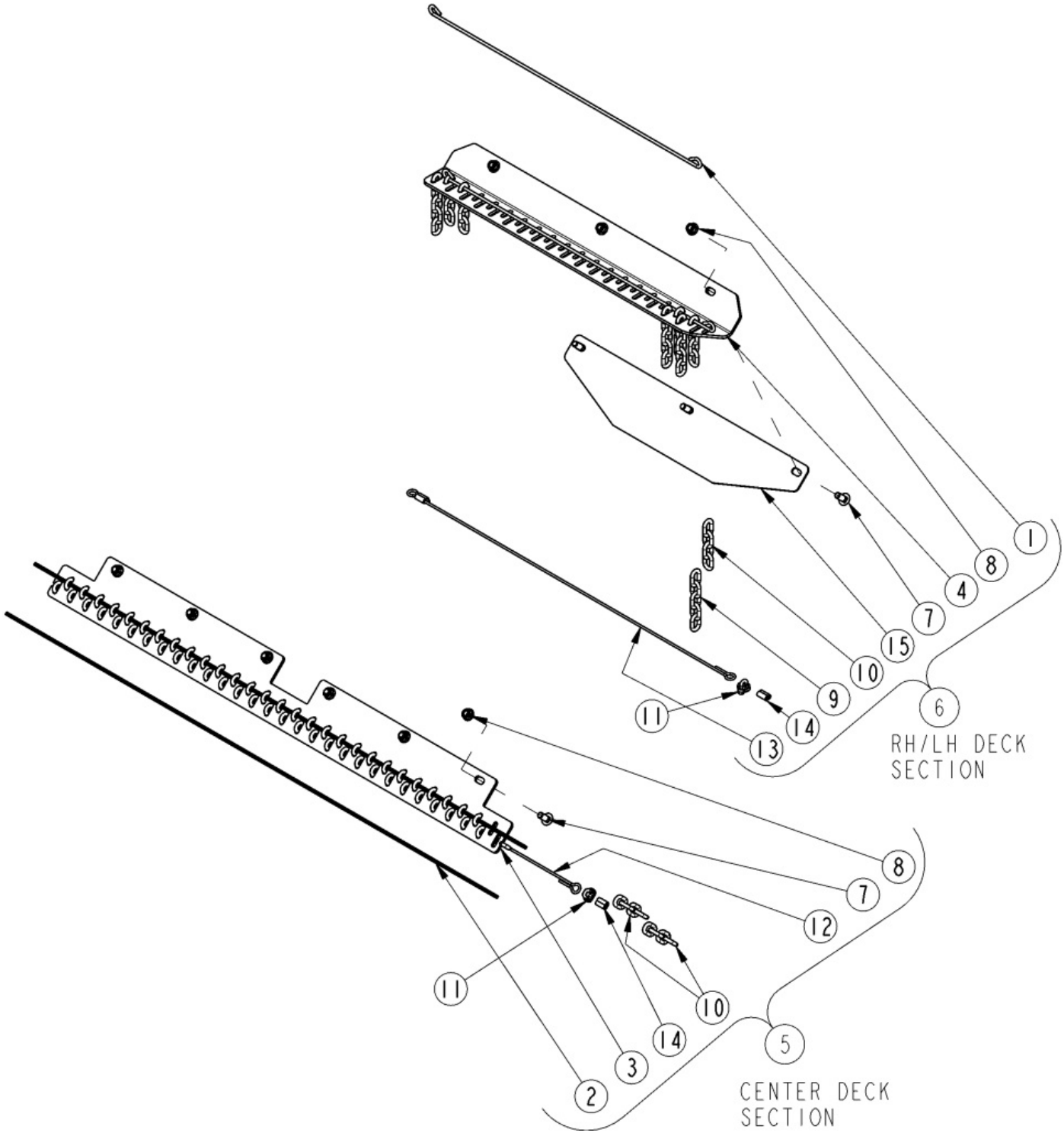

Guards Chains W/ Cable Rear

Applies to Models: RC5610, RC6610, RCM5610, RCM6610

Ref.	Part No.	Part Description	Comments
	DWG26549	Drawing Image Number	
	330-527A	CHAINGUARD CABLE REAR *	Complete assembly
1	326-535D	ROUND ROD 1/4 X 37 3/4	
1	318-108D	RPBY 326-535D	
2	318-478D	ROUND ROD .25 X 59	
3	318-930D	CHAINGUARD DBL REAR CTR	
4	330-051D	CHNGRD DBL REAR WING RH	
5	330-236K	CHNGRD CBL REAR CTR	
6	330-451K	CHNGRD CBL REAR WING RH	
7	802-214C	RHSNB 1/2-13X1 1/4 GR5	
8	803-037C	NUT HEX WHIZ 1/2-13 PLT	
9	890-341C	CHAIN WELD 5/16 PROOF X 5 LINK	
10	890-400C	CHAIN WELD 5/16 PROOF X 4 LINK	
11	890-672C	U-BOLT WIRE ROPE CLP 3/16 GAL.	Alternate to 891-236C
12	990-208R	AIRCRAFT CBL.3/16 7X7 GALV.	9' Required
13	990-208R	AIRCRAFT CBL.3/16 7X7 GALV.	6' Required
14	891-236C	SWAGE CLAMP, 3/16 CABLE	Or Use 890-672C
15	330-597D	CHAIN REV. DEFLECTOR REAR WING	

Guards Rubber Front

Applies to Models: RC5610, RC6610, RCM5610, RCM6610

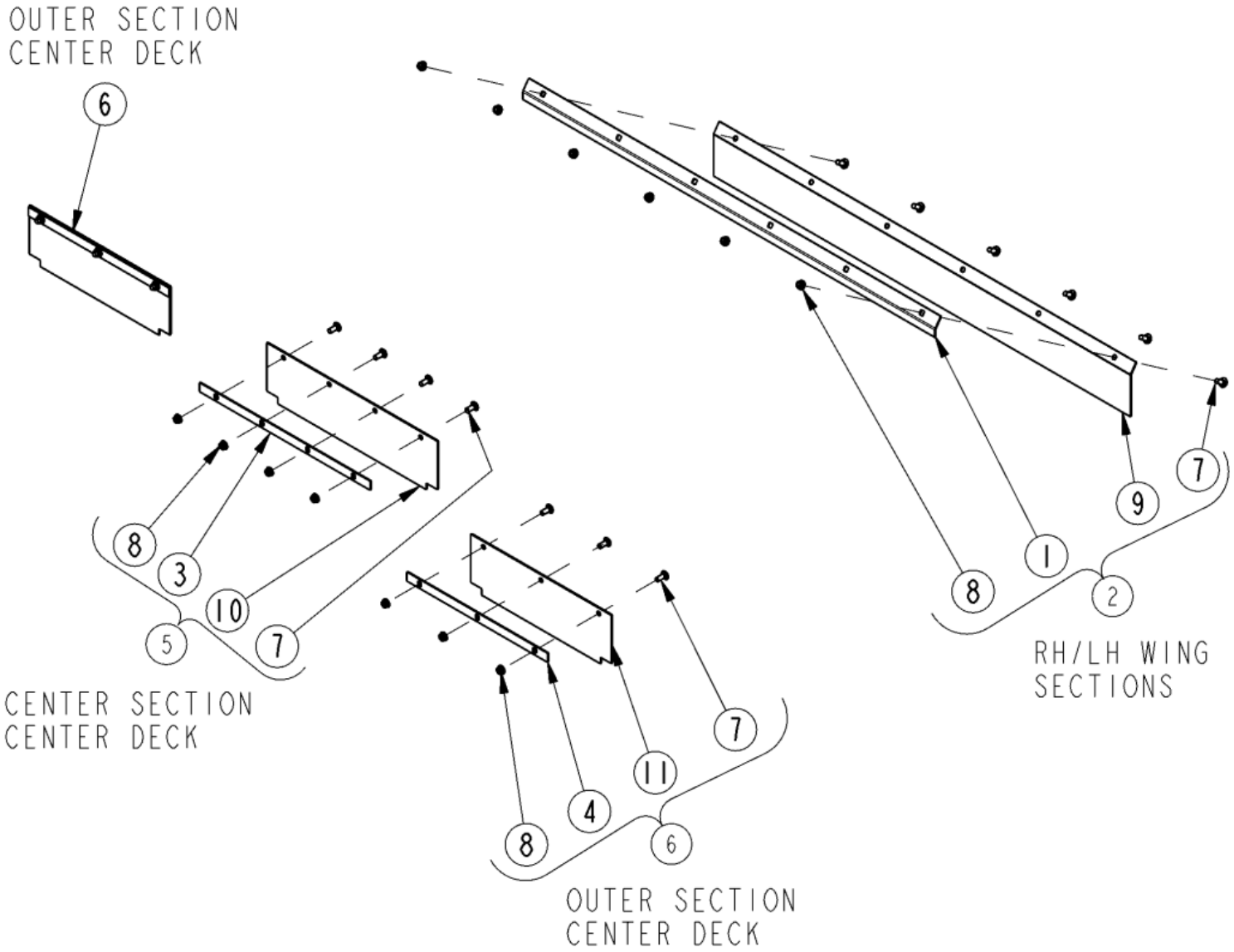

Guards Rubber Front

Applies to Models: RC5610, RC6610, RCM5610, RCM6610

Ref.	Part No.	Part Description	Comments
	DWG26541	Drawing Image Number	
	330-513A	RUBBERGUARD FRONT *	Complete assembly
1	318-657D	FORMED SUPPORT BAND	
2	318-728K	RUBBERGUARD, FRT WING	
3	318-917D	FLAT SUPPORT BAND	
4	318-918D	FLAT SUPPORT BAND	
5	330-316K	RUBBERGUARD FRT CNTR INNER	
6	330-317K	RUBBERGUARD FRT CNTR OUTER	
7	802-214C	RHSNB 1/2-13X1 1/4 GR5	
8	803-037C	NUT HEX WHIZ 1/2-13 PLT	
9	816-456C	FRONT WING RUBBER GUARD	
10	816-606C	RUBBER GUARD FRT CNTR	
11	816-607C	RUBBER GUARD FRT CNTR OUT	

Guards Rubber Rear

Applies to Models: RC5610, RC6610, RCM5610, RCM6610

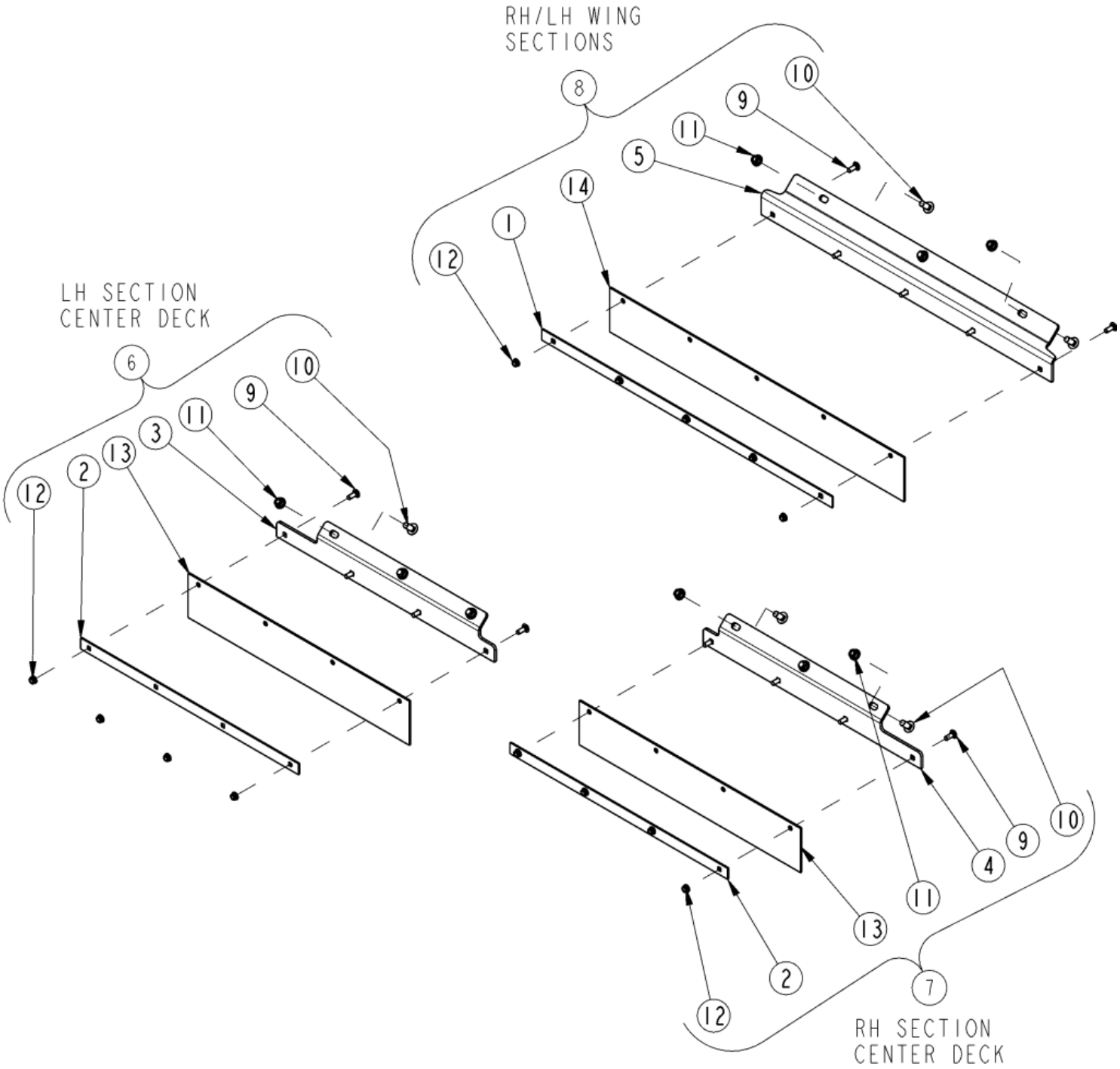

Guards Rubber Rear

Applies to Models: RC5610, RC6610, RCM5610, RCM6610

Ref.	Part No.	Part Description	Comments
	DWG26542	Drawing Image Number	
	330-525A	RUBBERGUARD REAR *	Complete assembly
1	318-000D	FLAT SUPPORT BAND	
2	318-129D	RUBBER GUARD FLAT BRKT. 28 1/2	
3	318-924D	MOUNT RBBRGRD CNTR LH	
4	318-925D	MOUNT RBBRGRD CNTR RH	
5	318-952D	MOUNT RBBRGRD WING REAR	
6	330-318K	RUBBERGUARD REAR CNTR LH	
7	330-319K	RUBBERGUARD REAR CNTR RH	
8	330-320K	RUBBERGUARD REAR WING	
9	802-015C	RHSNB 3/8-16X1 GR5	
10	802-214C	RHSNB 1/2-13X1 1/4 GR5	
11	803-037C	NUT HEX WHIZ 1/2-13 PLT	
12	803-198C	NUT HEX WHIZ 3/8-16 PLT	
13	816-246C	RUBBER GUARD REAR	
14	816-608C	RUBBERGUARD REAR WING	

Driveline Center (826-818C) Comer

Applies to Models: RC5610, RC6610, RCM5610, RCM6610

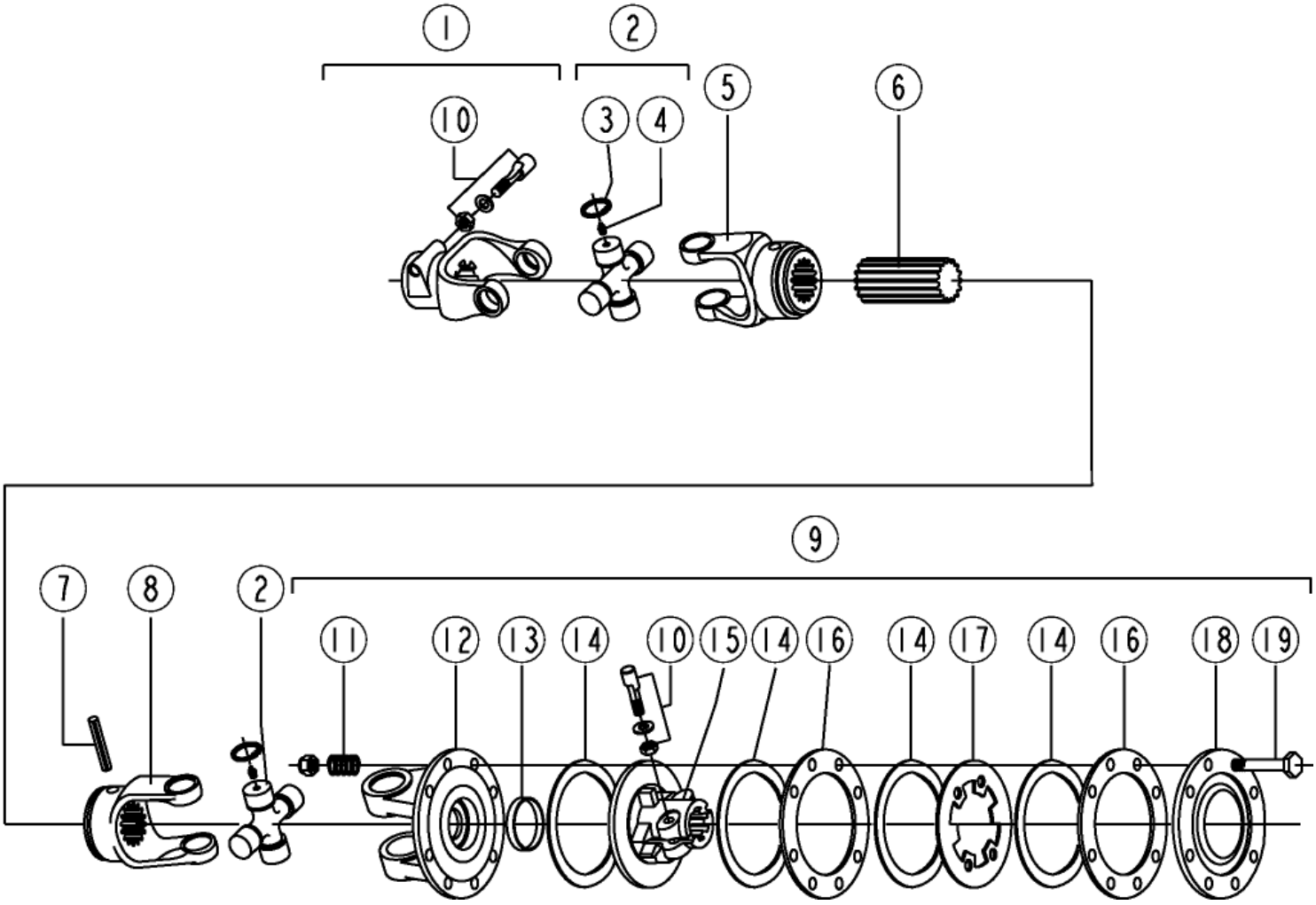

Driveline Center (826-818C) Comer

Applies to Models: RC5610, RC6610, RCM5610, RCM6610

Ref.	Part No.	Part Description	Comments
	DWG 37510	Image No.	
	826-818C	DRVLN C4 11 1.75-20 FX CLTCH *	Complete assembly
1	141.026.357.1	COMER YOKE COMPLETE	
2	180.016.780	CO CROSS JOURNAL SET	
3	190.000.032	CO CIRCLIP	
4	190.000.047	CO GREASE NIPPLE	
5	170.016.630.1	COMER YOKE, OUTER	
6	155.150.724	COMER SHAFT, SPLINED	
7	190.000.016	COMER ROLL PIN, INNER TUBE	
8	151.016.896.1	CO INNER YOKE	
9	146.264.024.1	COMER CLUTCH, COMPLETE ASSY	
10	165.000.589	COMER TAPERED PIN SET 1 3/4	
11	180.014.022	COMER SPRING	
12	151.016.037.1	COMER YOKE, FLANGED	
13	180.019.019	COMER BUSH	
14	180.019.018	RPBY 180.019.340	
15	151.018.228.1	COMER CLUTCH SUPPORT	
16	180.019.014	COMER INNER PLATE	
17	180.019.115	COMER INTERMEDIATE PLATE	
18	180.019.116.1	COMER PRESSURE PLATE	
19	165.000.548	COMER BOLT WITH NUT M10X100	

Driveline Conv. 1000 RPM (826-247C) Walterscheid

Applies to Models: RCM5610, RCM6610

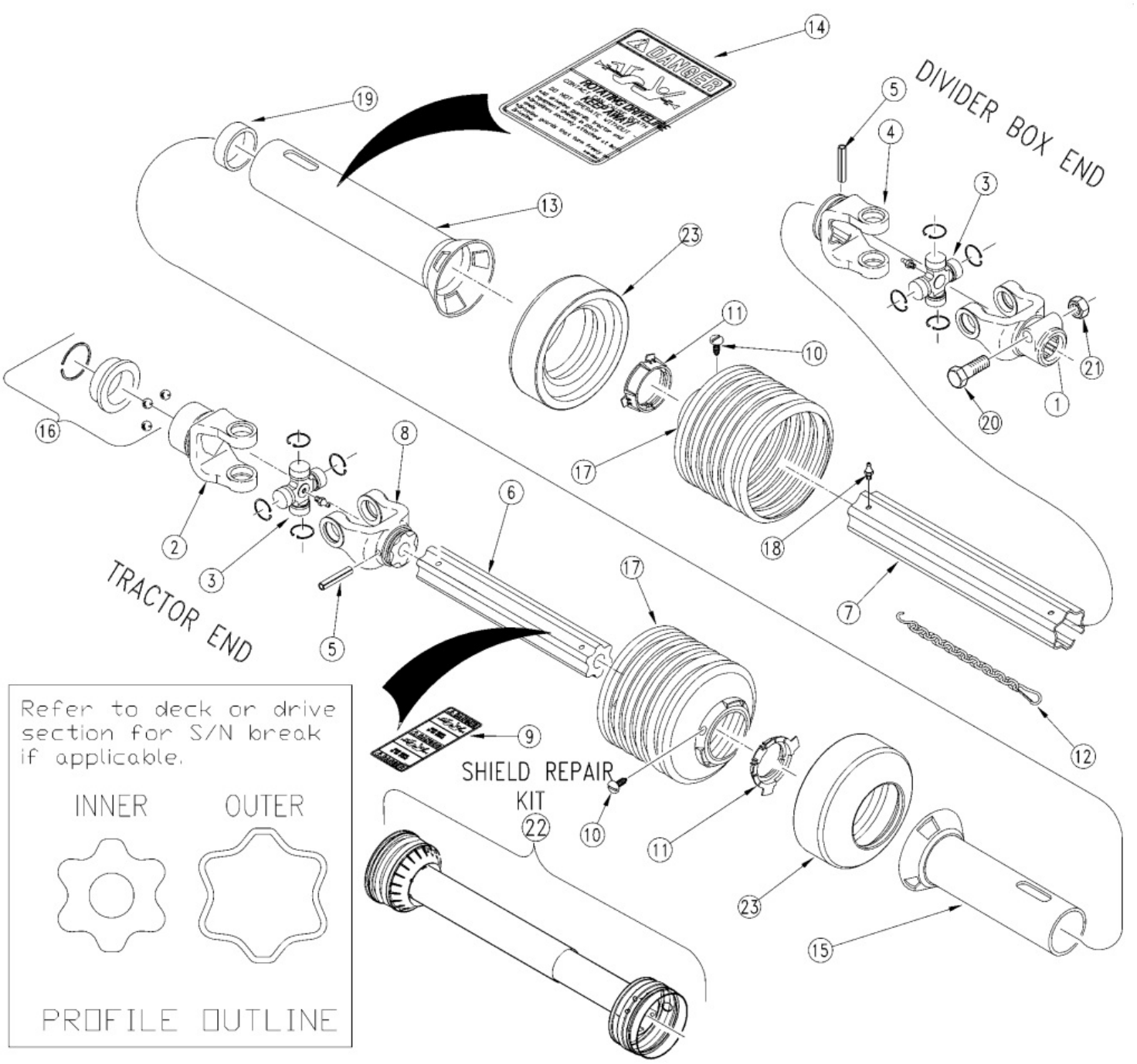

Driveline Conv. 1000 RPM (826-247C) Walterscheid

Applies to Models: RCM5610, RCM6610

Ref.	Part No.	Part Description	Comments
	DWG 18549	Drawing Image Number	
	826-247C	PTO 2500 CAT.5 1000 1 3/8-21 *	Complete assembly
1	325027	WS YOKE 1 3/4-20 SPL.I.C. 2500	
2	362430	WS YOKE 1 3/8-21 SPL. AS	
3	312209	WS CROSS & BEARING KIT 2500	
4	097140	WS INBOARD YOKE 2500	
5	304046	WS SPRING PIN 10 X 90	
6	333645	WS INNER PROFILE S4	
7	387768	WS PROFILE & SLEEVE W.A.	
8	097133	WS INBOARD YOKE 2400	
9	818-540C	DECAL DANGER GUARD MISS PTO	
10	365305	WALTERSCHEID SCREW	
11	087276	WS BEARING RING - SC25	
12			
13	391409	WS OUTER SHIELD TUBE OVAL	
14	818-552C	DECAL DANGER PTO DRIVELINE	
15	391410	WS INNER SHIELD TUBE RND.	
16	364915	WS ASSY COLLAR KIT	
17	377437	WS SHIELD CONE 7 RIB	
18	380371	WS ZERK	
19	355155	WS SUPPORT BEARING	
20	702352	WS HEX BOLT M16 X 90 GR 8.8	
21	304011	WS LOCK NUT M16	
22	826-603C	SHIELD KIT, 826-247C	
23	359474	WS REINFORCING COLLAR	

Driveline Conv. 540 RPM (826-112C) Walterscheid

Applies to Models: RC5610, RC6610

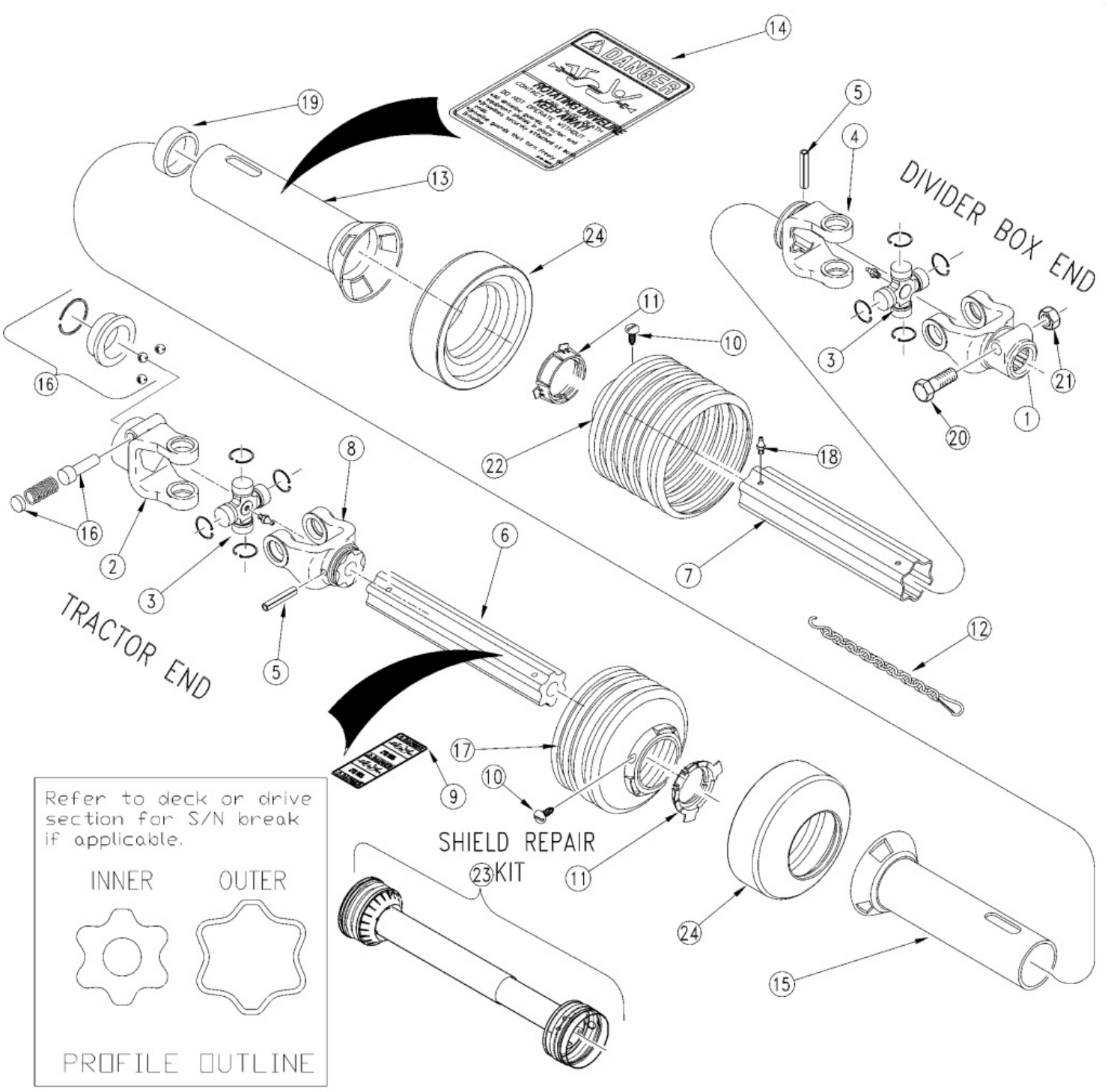

Driveline Conv. 540 RPM (826-112C) Walterscheid

Applies to Models: RC5610, RC6610

Ref.	Part No.	Part Description	Comments
	DWG 18548	Drawing Image Number	
	826-112C	PTO 2500 X 39.76 NO CLUTCH *	
1	325027	WS YOKE 1 3/4-20 SPL.I.C. 2500	
2	362428	WS YOKE 1 3/8"-6 SPL. ASG	
3	312209	WS CROSS & BEARING KIT 2500	
4	097140	WS INBOARD YOKE 2500	
5	304046	WS SPRING PIN 10 X 90	
6	321256	WS INNER PROFILE 2400	
7	390257	WS PROFILE & SLEEVE W.A.	
8	097133	WS INBOARD YOKE 2400	
9	818-540C	DECAL DANGER GUARD MISS PTO	
10	365305	WALTERSCHEID SCREW	
11	087276	WS BEARING RING - SC25	
13	389850	WS OUTER SHIELD TUBE RND.	
14	818-552C	DECAL DANGER PTO DRIVELINE	
15	388957	WS INNER SHIELD TUBE ROUND	
16	339107	WS Q.D. PIN KIT	
17	377437	WS SHIELD CONE 7 RIB	
18	380371	WS ZERK	
19	355155	WS SUPPORT BEARING	
20	702352	WS HEX BOLT M16 X 90 GR 8.8	
21	304011	WS LOCK NUT M16	
22	377442	WS SHIELD CONE - 12 RIB	
23	826-587C	SHIELD KIT, 826-112C	
24	359474	WS REINFORCING COLLAR	

Driveline CV 1.38 1000 RPM (826-644C) Weasler

Applies to Models: RCM5610, RCM6610

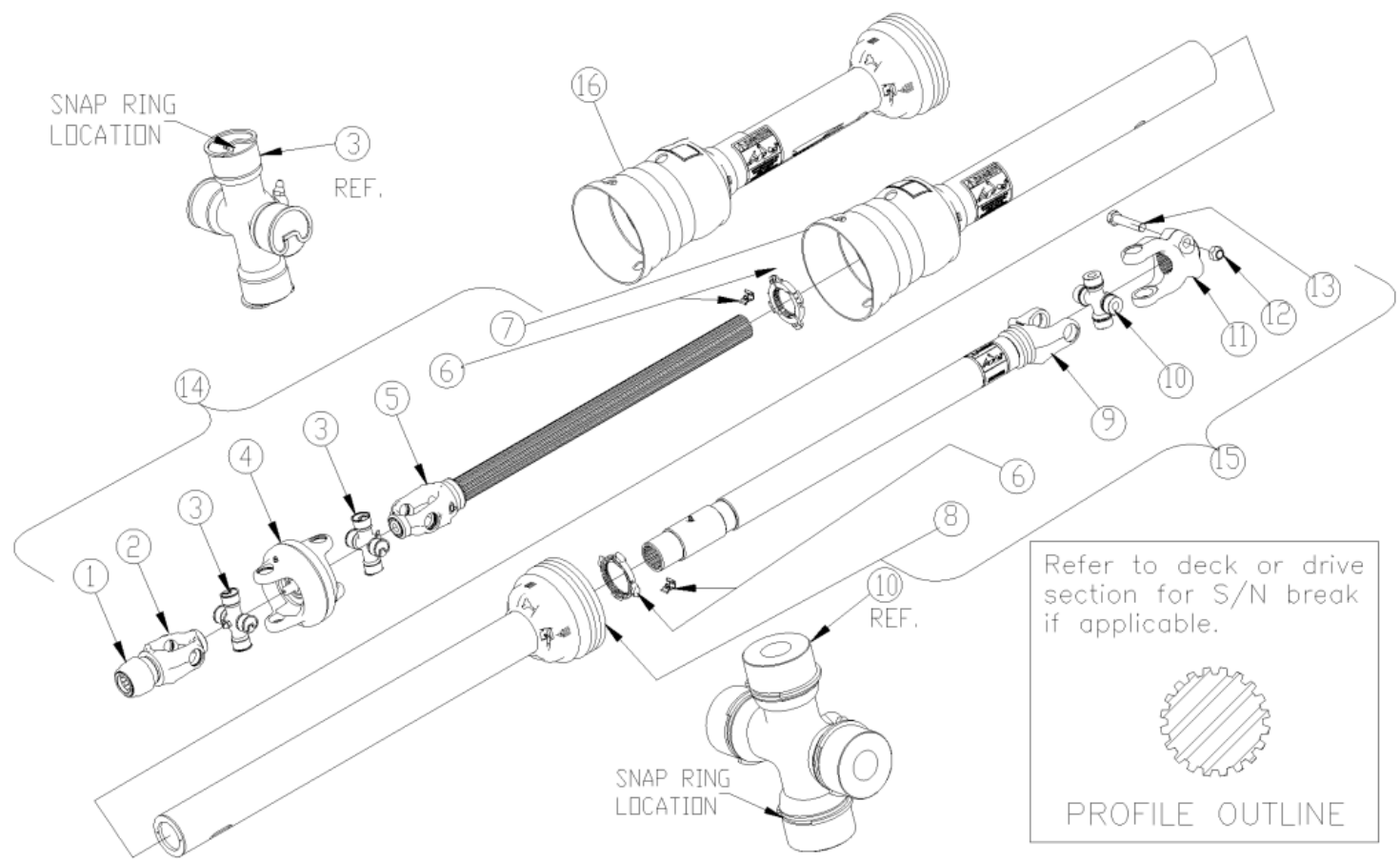

Driveline CV 1.38 1000 RPM (826-644C) Weasler

Applies to Models: RCM5610, RCM6610

Ref.	Part No.	Part Description	Comments
	DWG 37911	Drawing Image Number	
	826-644C	DRVLN C6 42 1.38-21 CV *	Complete assembly
1	26-15120	WE SSL/AUTO-LOK REPAIR KIT	
2	68810-1003	WE WWCV AUTO-LOK YOKE ASM	
3	03-15570	WE AB8/AW25EBL CROSS KIT	
4	26-16033	WE WWCV CENTER HOUSING	
5	99-24406	WE YOKE&SHAFT (1.69-20 SPLINE)	
6	19-15135	WE GUARD REPAIR KIT	
7	97-25023	WE OUTER GUARD	
8	96-24406	WE INNER GUARD	
9	98-24406	WE YOKE, TUBE & SLIP SLEEVE	
10	03-15316	WE 55EBL CROSS KIT	
11	55051-1817	WE YOKE	
12	11-14988	WE LOCK NUT .625-11	
13	11-15180	WE BOLT .625-11 X 3.00L GR8	
14	93-25023	WE JOINT&SHFT HALF ASM W/GUARD	
15	92-24406	WE JOINT&TUBE HALF ASM W/GUARD	
16	91-25023	WE GUARD SET	

Driveline CV 1.38 1000 RPM W/ Overrunning Clutch (826-793C) Weasler

Applies to Models: RCM5610, RCM6610

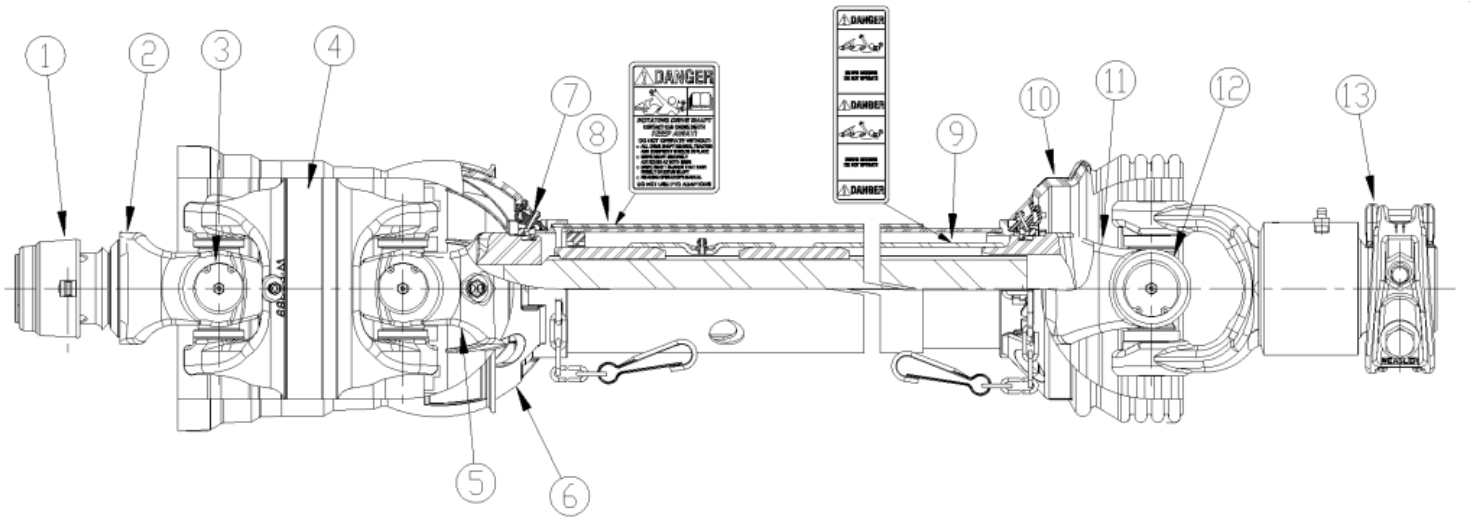

Driveline CV 1.38 1000 RPM W/ Overrunning Clutch (826-793C) Weasler

Applies to Models: RCM5610, RCM6610

Ref.	Part No.	Part Description	Comments
	DWG 35997	Drawing Image Number	
	826-793C	DRVLN C6 39 1.38-21 CV ORCLTCH *	Complete assembly
1	26-15120	WE SSL/AUTO-LOK REPAIR KIT	
2	68810-1003	WE WWCV AUTO-LOK YOKE ASM	
3	03-15570	WE AB8/AW25EBL CROSS KIT	
4	26-16033	WE WWCV CENTER HOUSING	
5	99-24406	WE YOKE&SHAFT (1.69-20 SPLINE)	
6	97-26654	WE OUTER GUARD	
7	19-15135	WE GUARD REPAIR KIT	
8	13-10021	WE SAFETY SIGN	
9	13-10022	WE SAFETY SIGN	
10	96-26654	WE INNER GUARD	
11	98-26654	WE YOKE, TUBE & SLIP SLEEVE	
12	03-15316	WE 55EBL CROSS KIT	
13	39-10039	WE OVERRUNNING THRST CLTCH ASM	

Driveline CV 1.75 1000 RPM (826-645C)

Applies to Models: RCM5610, RCM6610

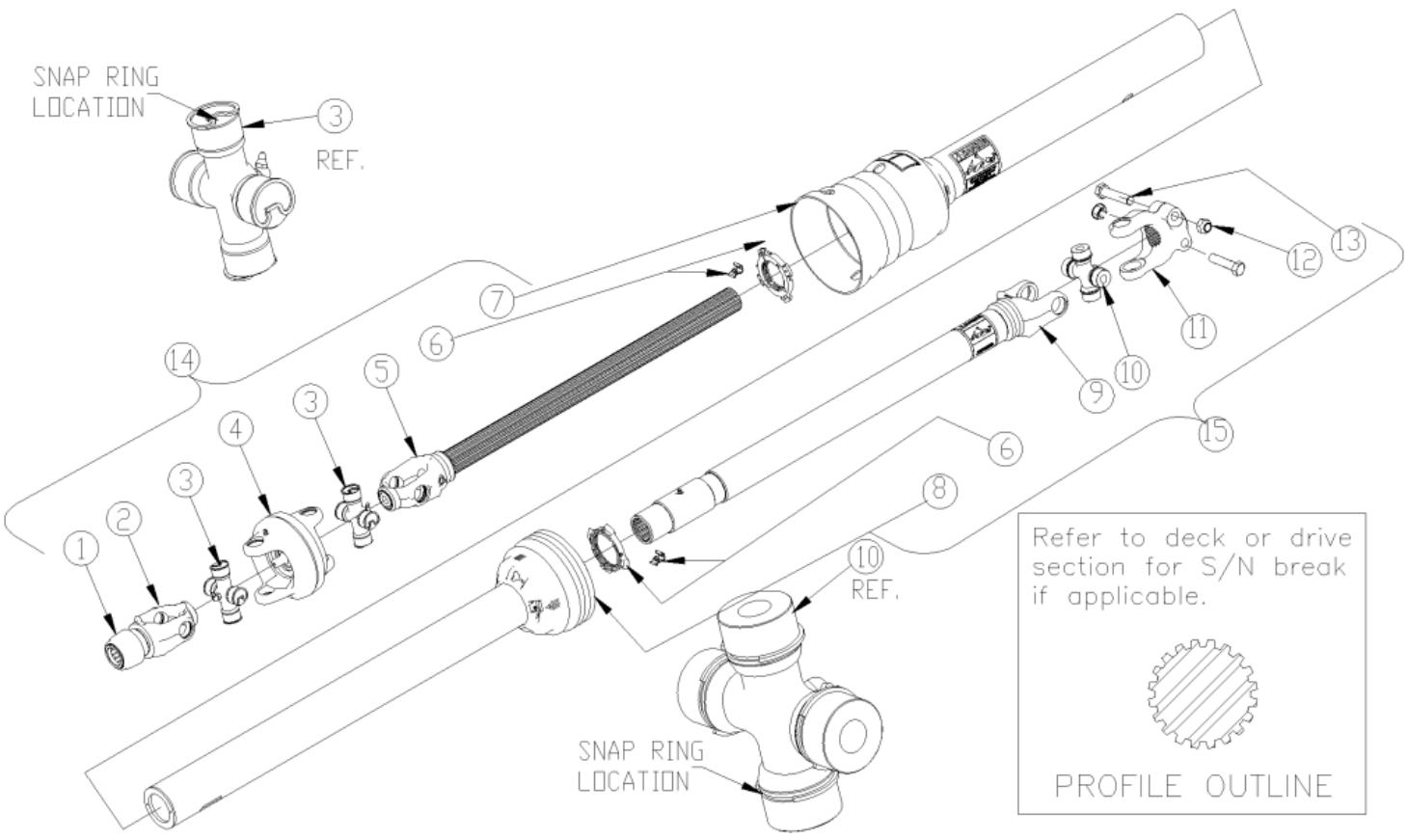

Driveline CV 1.75 1000 RPM (826-645C)

Applies to Models: RCM5610, RCM6610

Ref.	Part No.	Part Description	Comments
	DWG 37912	Drawing Image Number	
	826-645C	DRVLN C6 47 1.75-20 CV *	Complete assembly
1	26-13387	WE SSL/AUTO-LOK REPAIR KIT	
2	68810-1005	WE WWCV AUTO-LOK YOKE ASM	
3	03-15570	WE AB8/AW25EBL CROSS KIT	
4	26-16033	WE WWCV CENTER HOUSING	
5	99-24406	WE YOKE&SHAFT (1.69-20 SPLINE)	
6	19-15135	WE GUARD REPAIR KIT	
7	97-25075	WE OUTER GUARD	
8	96-25075	WE INNER GUARD	
9	98-25075	WE YOKE, TUBE & SLIP SLEEVE	
10	03-15316	WE 55EBL CROSS KIT	
11	55051-1817	WE YOKE	
12	11-14988	WE LOCK NUT .625-11	
13	11-15180	WE BOLT .625-11 X 3.00L GR8	
14	93-25075	WE JOINT&SHFT HALF ASM W/GUARD	
15	92-25075	WE JOINT&TUBE HALF ASM W/GUARD	

Driveline CV 540 RPM (826-643C) Weasler

Applies to Models: RC5610, RC6610

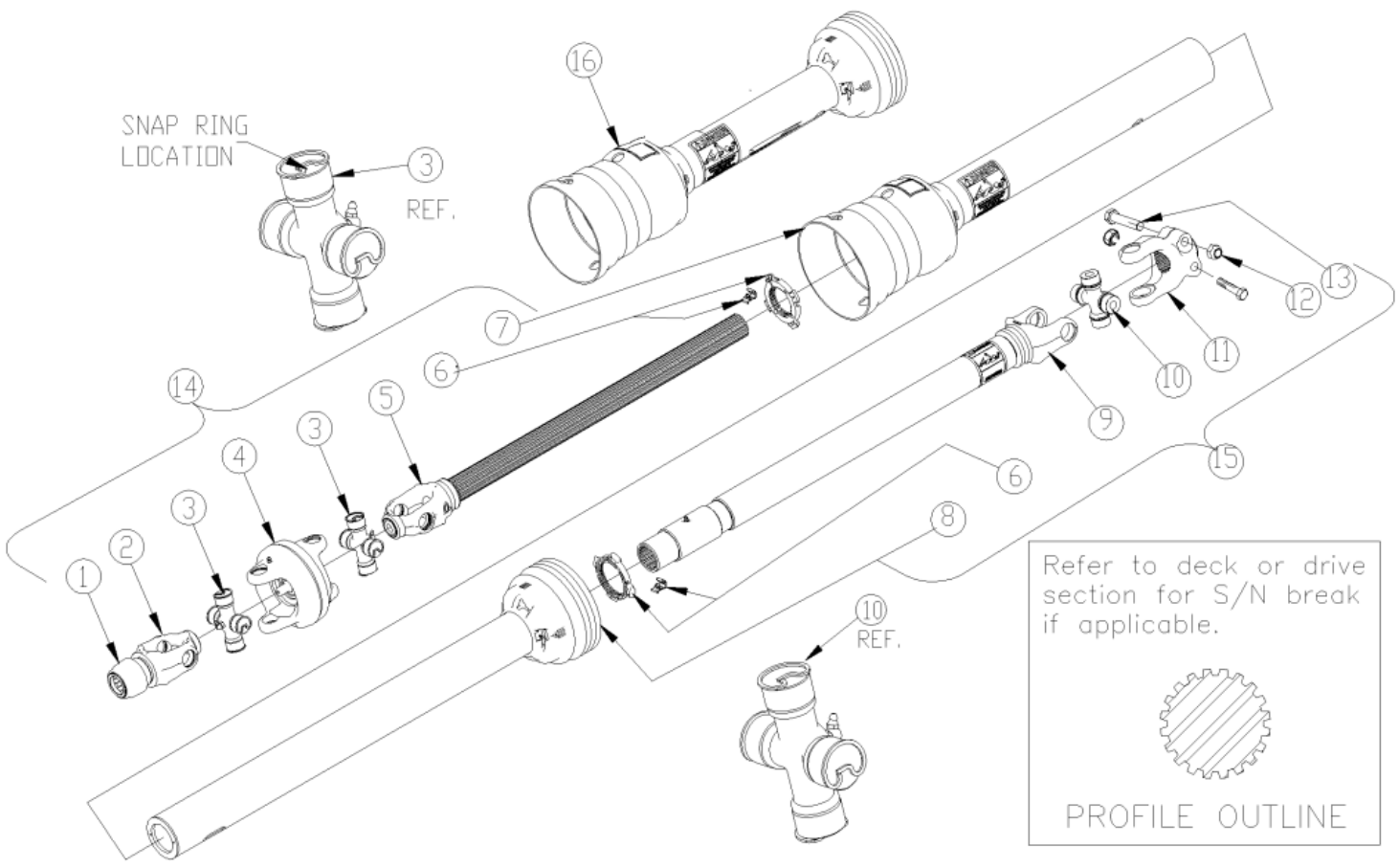

Driveline CV 540 RPM (826-643C) Weasler

Applies to Models: RC5610, RC6610

Ref.	Part No.	Part Description	Comments
	DWG 37916	Drawing Image Number	
	826-643C	DRVLN C6 42 1.38-6 CV *	Complete assembly
1	26-15120	WE SSL/AUTO-LOK REPAIR KIT	
2	68810-1004	WE WWCV AUTO-LOK YOKE ASM	
3	03-15570	WE AB8/AW25EBL CROSS KIT	
4	26-16033	WE WWCV CENTER HOUSING	
5	99-24406	WE YOKE&SHAFT (1.69-20 SPLINE)	
6	19-15135	WE GUARD REPAIR KIT W/ CHAINS	
7	97-24406	WE OUTER GUARD	
8	96-24406	WE INNER GUARD	
9	98-24406	WE YOKE, TUBE & SLIP SLEEVE	
10	03-15316	WE 55EBL CROSS KIT	
11	55051-1817	WE YOKE	
12	11-14988	WE LOCK NUT .625-11	
13	11-15180	WE BOLT .625-11 X 3.00L GR8	
14	93-24406	WE JOINT&SHFT HALF ASM W/GUARD	
15	92-24406	WE JOINT&TUBE HALF ASM W/GUARD	
16	91-24406	WE GUARD SET	

Driveline Wing (826-811C) Comer

Applies to Models: RC5610, RCM5610

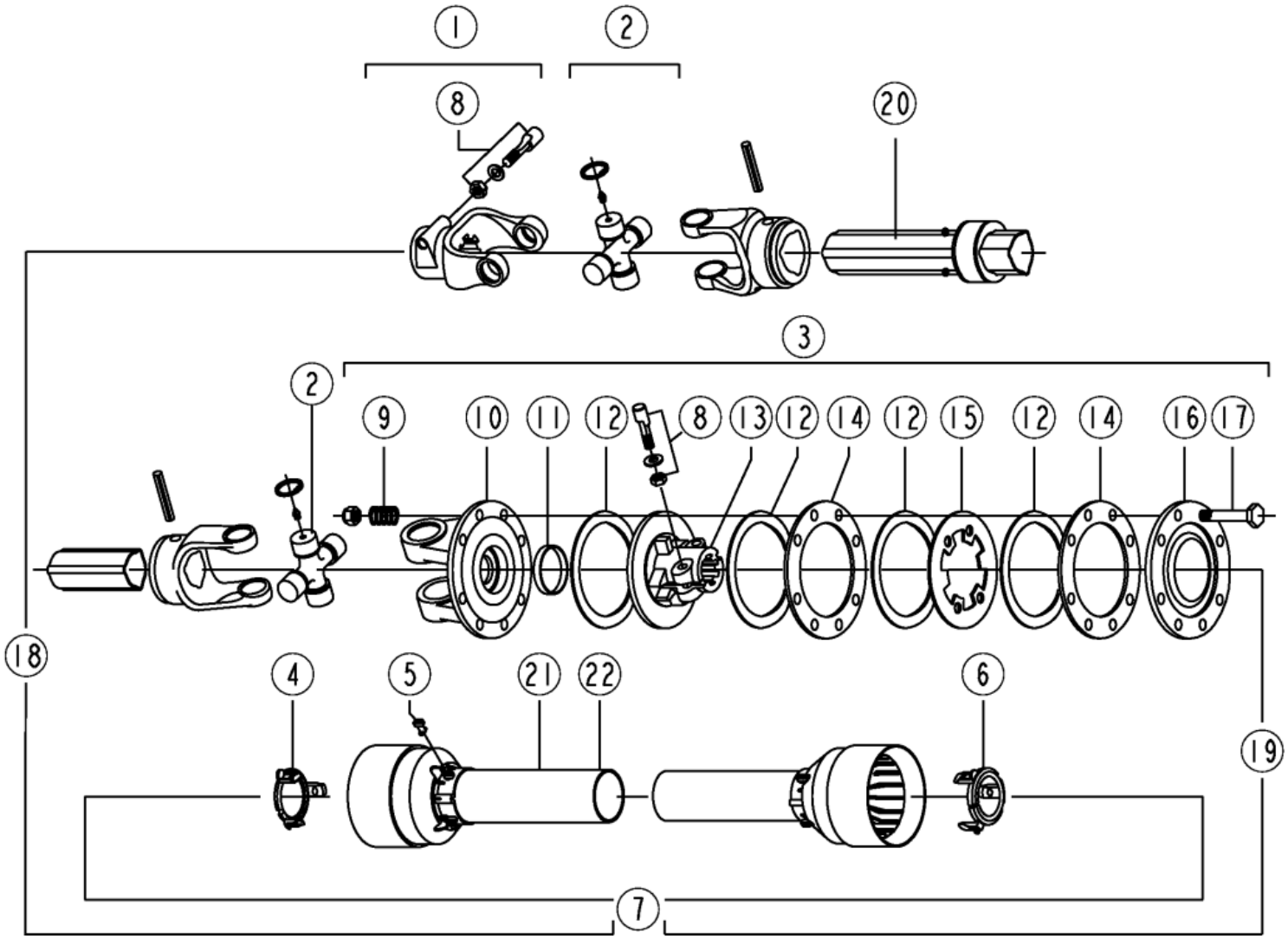

Driveline Wing (826-811C) Comer

Applies to Models: RC5610, RCM5610

Ref.	Part No.	Part Description	Comments
	DWG 37917	Image No.	
	826-811C	DRVLN C4 50 1.75-20 FX CLTCH *	Complete assembly
1	141.026.357.1	COMER YOKE COMPLETE	
2	180.016.780	CO CROSS JOURNAL SET	
3	146.264.024.1	COMER CLUTCH, COMPLETE ASSY	
4	8180.016.237	CO RETAINING COLLAR OUTER TUBE	
5	8180.014.240	RPBY 180.014.240	
6	8180.016.238	CO RETAINING COLLAR INNER TUBE	
7	142.260.5197621	CO COMPLETE GUARD W/MANUAL	
8	165.000.589	COMER TAPERED PIN SET 1 3/4	
9	180.014.022	COMER SPRING	
10	151.016.037.1	COMER YOKE, FLANGED	
11	180.019.019	COMER BUSH	
12	180.019.018	RPBY 180.019.340	
13	151.018.228.1	COMER CLUTCH SUPPORT	
14	180.019.014	COMER INNER PLATE	
15	180.019.115	COMER INTERMEDIATE PLATE	
16	180.019.116.1	COMER PRESSURE PLATE	
17	165.000.548	COMER BOLT WITH NUT M10X100	
18	8123.360.504.11	CO HALF FEMALE SHFT W/GUARDING	
19	8123.460.105611	CO HALF MALE SHAFT W/GUARD	
20	190.000.098	COMER DANGER LABEL OUTER TUBE	
21	190.000.099	COMER DANGER LABEL GUARD OUTER	
22	190.000.903	CO LABEL W/CUSTOMER CODE	

Driveline Wing (826-812C) Comer

Applies to Models: RC5610, RC6610, RCM5610, RCM6610

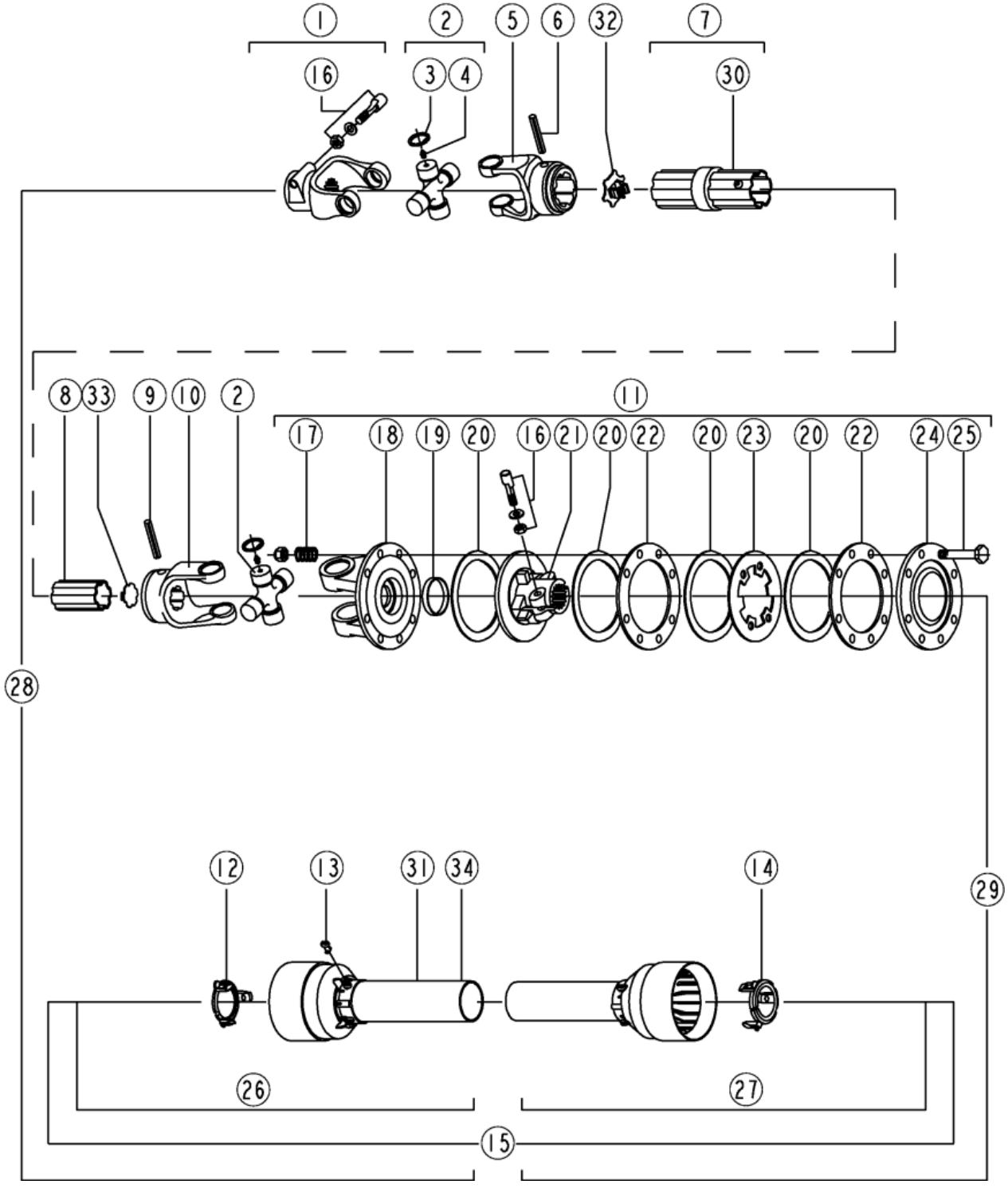

Driveline Wing (826-812C) Comer

Applies to Models: RC5610, RC6610, RCM5610, RCM6610

Ref.	Part No.	Part Description	Comments
	DWG 37918	Image No.	
	826-812C	DRVLN C5 48 1.75-20 FX CLTCH *	Complete assembly
1	141.028.195.1	COMER YOKE COMPLETE	
2	180.018.581	CO CROSS JOURNAL SET	
3	190.000.035	N/A	available only in cross journal set (#2)
4	190.000.047	CO GREASE NIPPLE	
5	151.018.241.1	COMER YOKE OUTER	
6	190.000.243	COMER OUTER TUBE ROLL PIN	
7	150.281.5197810	CO COMPLETE OUTER TUBE W/LABEL	
8	159.280.168	COMER INNER TUBE	
9	190.000.271	COMER ROLL PIN FOR INNER TUBE	
10	151.018.242.1	COMER INNER YOKE	
11	146.284.020.1	COMER CLUTCH, DISC COMPLETE	
12	180.018.251	COMER RETAINING COLLER INNER	
13	180.014.240	COMER BOLT	
14	180.018.252	COMER RETAINING COLLER INNER	
15	142.286.2519821	CO COMPLETE GUARD W/MANUAL	
16	165.000.589	COMER TAPERED PIN SET 1 3/4	
17	180.014.022	COMER SPRING	
18	151.018.016.1	COMER YOKE, FLANGED	
19	180.019.019	COMER BUSH	
20	180.019.018	RPBY 180.019.340	
21	151.018.228.1	COMER CLUTCH SUPPORT	
22	180.019.014	COMER INNER PLATE	
23	180.019.115	COMER INTERMEDIATE PLATE	
24	180.019.116.1	COMER PRESSURE PLATE	
25	165.000.548	COMER BOLT WITH NUT M10X100	
26	142.283.2509821	CO HALF FEMALE GUARD	
27	142.287.2199821	CO HALF MALE GUARD	
28	123.386.190.01	CO HALF FEMALE SHFT W/GUARDING	
29	123.486.343.01	CO HALF MALE SHAFT W/GUARDING	
30	190.000.098	COMER DANGER LABEL OUTER TUBE	
31	190.000.099	COMER DANGER LABEL GUARD OUTER	
32	180.018.393	COMER CAP OUTER TUBE, PLASTIC	
33	180.018.435	COMER INNER CAP	
34	190.000.932	CO LABEL W/CUSTOMER CODE	

Driveline Wing (826-812C) Walterscheid

Applies to Models: RC5610, RC6610, RCM5610, RCM6610

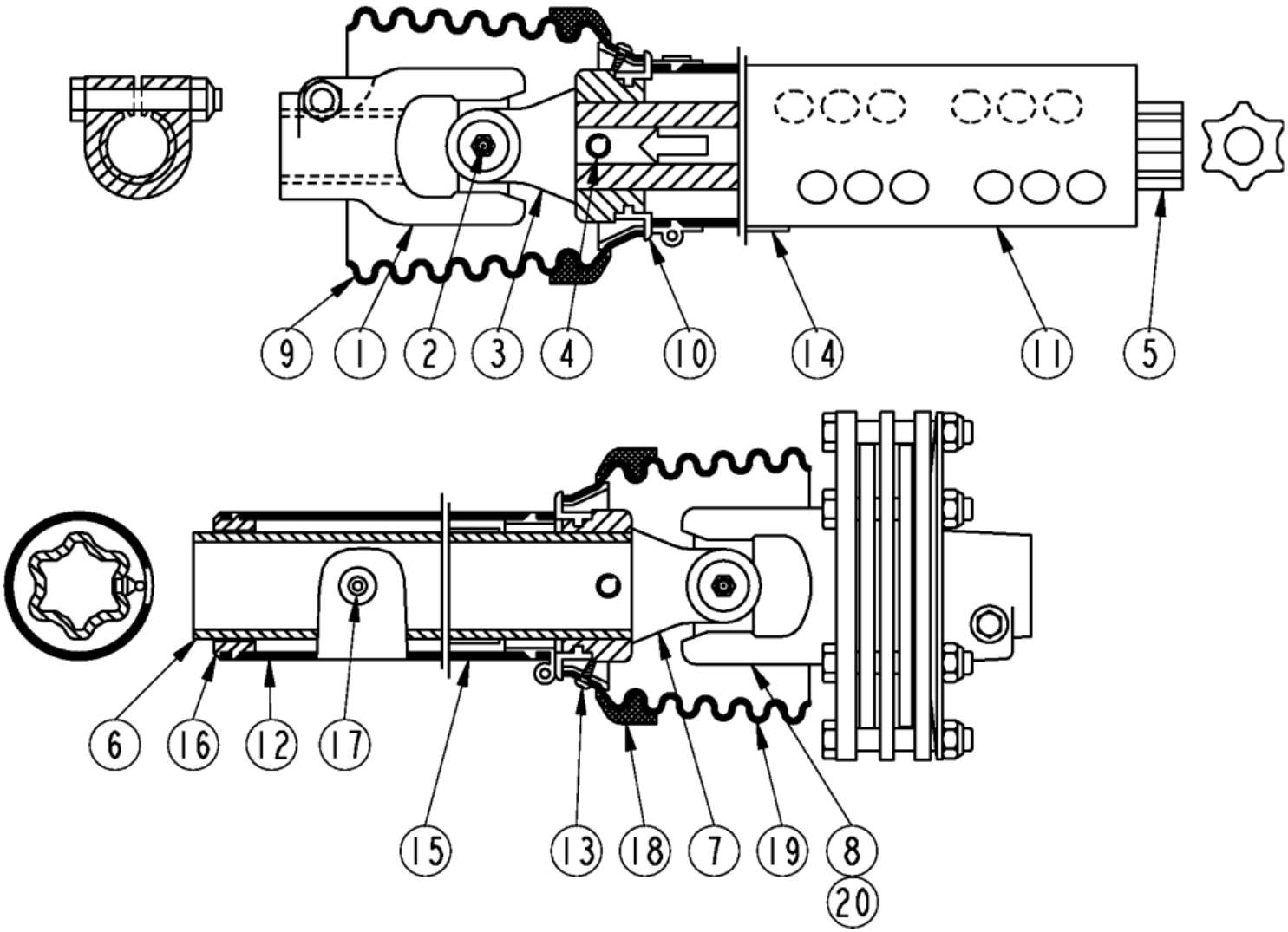

Driveline Wing (826-812C) Walterscheid

Applies to Models: RC5610, RC6610, RCM5610, RCM6610

Ref.	Part No.	Part Description	Comments
	DWG 37919	Image No.	
	826-812C	DRVLN C5 48 1.75-20 FX CLTCH *	Complete assembly
1	325027	WS YOKE 1 3/4-20 SPL.I.C. 2500	
2	190224	WS CROSS & BEARING KIT	
3	097133	WS INBOARD YOKE S4	
4	304046	WS SPRING PIN 10 X 90	
5	323524	WS INNER PROFILE S4L	
6	397493	WS OUTER PROFILE S5L	
7	097140	WS INBOARD YOKE S5	
8	395980	WS FRICTION CLUTCH	
9	125142	WS GUARD CONE 7 RIB	
10	087276	WS BRG RING - SC25	
11	371708	WS GUARD TUBE OUTER	
11	371709	RPBY 371708	
12	399469	WS GUARD TUBE INNER	
13	365305	WS SCREW	
14	818-552C	DECAL DANGER PTO DRIVELINE	
15	818-540C	DECAL DANGER GUARD MISS PTO	
16	396295	WS SUPPORT BEARING	
17	380371	WS ZERK	
18	359474	WS REINFORCING COLLAR	
19	125140	WS GUARD CONE 6 RIB	
20	107542	CC LOCK ASSY	

Gearbox (826-322C) Comer

Applies to Models: RCM6610

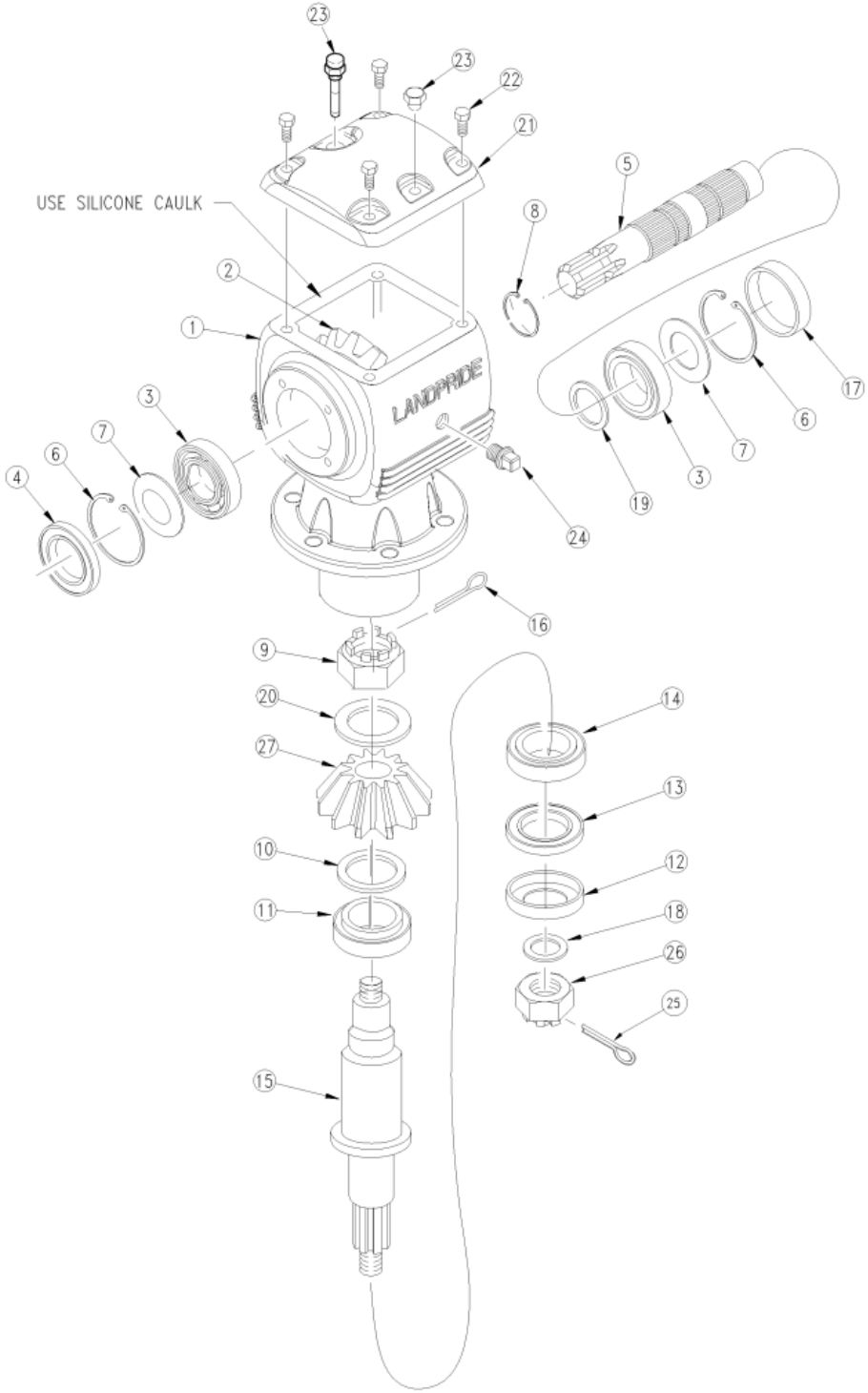

Gearbox (826-322C) Comer

Applies to Models: RCM6610

Ref.	Part No.	Part Description	Comments
	DWG 21167	Drawing Image Number	
	826-322C	GBOX RCM60 1.75-20 1:1.21 CCW *	Complete assembly
1	U0.125.0532.00	CO HOUSING	
2	U0.125.5003.00	CO CROWN GEAR Z22 M7.8	
3	8.0.9.00143	CO BEARING 30209 RTA25	
4	8.7.3.00331	CO OIL SEAL 45 X 85 X 10	
5	U0.125.2050.00	CO INPUT SHAFT 1 3/4"-20	
6	8.5.2.00332	CO SNAP RING UNI 7437	
7	0.709.7500.00	CO SHIM 84.7	
8	8.5.1.00533	CO SNAP RING 50 UNI7435	
9	U0.125.7100.00	CO CASTLE NUT	
10	0.712.7500.00	CO SHIM 50.3X70.3	
11	8.0.9.01090	CO BEARING 32210	
12	1.181.7101.00	CO SEAL PROTECTOR	
13	8.7.1.02349	CO OIL SEAL 60X110X12	
14	8.0.9.00079	CO BEARING 30212	
15	U0.125.3003.00	CO OUTPUT SHAFT	
16	8.4.7.02265	CO COTTER PIN B 5X60	
17	0.121.7101.00	CO CAP	
18	0.288.7101.00	CO BLANK WASHER	
19	0.252.7525.00	CO SHIM 45.3X2.5	
20	0.285.7510.00	CO SHIM 40.3 X 61.7 X 1	
21	U0.125.1303.00	CO TOP COVER	
22	8.1.1.00501	CO BOLT M8X22 HHB	
23	826-486C	COMER U0.125.7003.00 DIPSTICK	
24	8.6.5.00006	CO OIL PLUG 3/8	
25	8.4.7.01045	CO COTTER PIN B6X70 SLD-SPRTLY	
26	8.2.2.00560	CO CASTLE NUT M36X3	
27	U0.125.6003.00	CO CROWN GEAR Z18 M7.8 *	
		Notes: Oil Type 80-90W Capacity 10 Pints	

Gearbox (826-726C)

Applies to Models: RCM5610

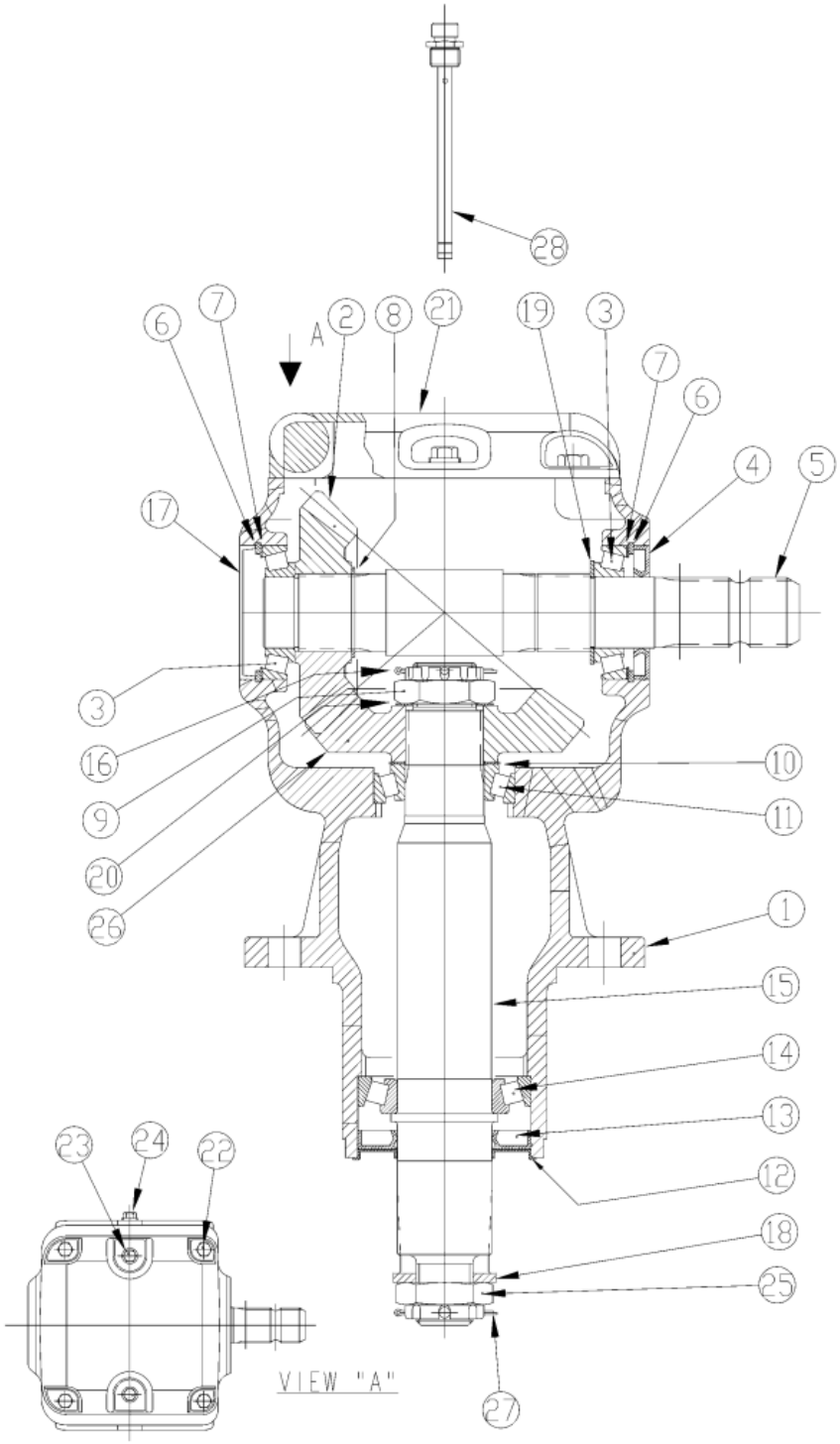

Gearbox (826-726C)

Applies to Models: RCM5610

Ref.	Part No.	Part Description	Comments
	DWG 35001	Drawing Image Number	
	826-726C	GBOX RC50 1.15:1 REV *	
1	U0.125.0531.00	CO CASTING & MACHINING	
2	U0.125.5061.00	CO GEAR PINION Z19 M7.8	
3	8.0.9.00143	CO BRG 30209 TAPPERED	
4	8.7.3.00331	CO OIL SEAL 45 X 85 X 10 SL	
5	U0.125.2050.00	CO INPUT SHAFT 1 3/4"-20	
6	8.5.2.00332	CO SNAP RING UNI 7437	
7	A.709.500	COMER SHIM KIT	
8	8.5.1.00533	CO SNAP RING 50 UNI7435	
9	U0.125.7100.00	CO CASTLE NUT	
10	A.712.500	COMER SHIM KIT	
11	8.0.9.01090	CO BRG 32210 TAPPERED	
12	1.181.7101.00	CO SEAL PROTECTOR	
13	8.7.1.02349	CO OIL SEAL 60X110X12 SL	
14	8.0.9.00079	CO BRG 30212 TAPPERED	
15	U0.125.3002.00	CO OUTPUT SHAFT	
16	8.4.7.02265	CO COTTER PIN B 5X60	
17	0.121.7101.00	CO CAP	
18	0.288.7101.00	CO BLANK WASHER	
19	0.252.7525.00	CO SHIM 45.3X2.5	
20	0.285.7510.00	CO SHIM 40.3 X 61.7 X 1	
21	U0.125.1303.00	CO TOP COVER	
22	8.1.1.00501	CO BOLT M8X22 HHB	
23	8.6.5.00203	CO PLUG 1/2" GAS	
24	8.6.5.00006	CO OIL PLUG 3/8	
25	8.2.2.00560	CO CASTLE NUT M36X3	
26	U0.125.6061.00	CO GEAR CROWN Z22 M7.8	
27	8.4.7.01045	CO COTTER PIN B6X70 SLD-SPRTLY	
28	826-486C	COMER U0.125.7003.00 DIPSTICK	

Gearbox (826-731C)

Applies to Models: RCM6610

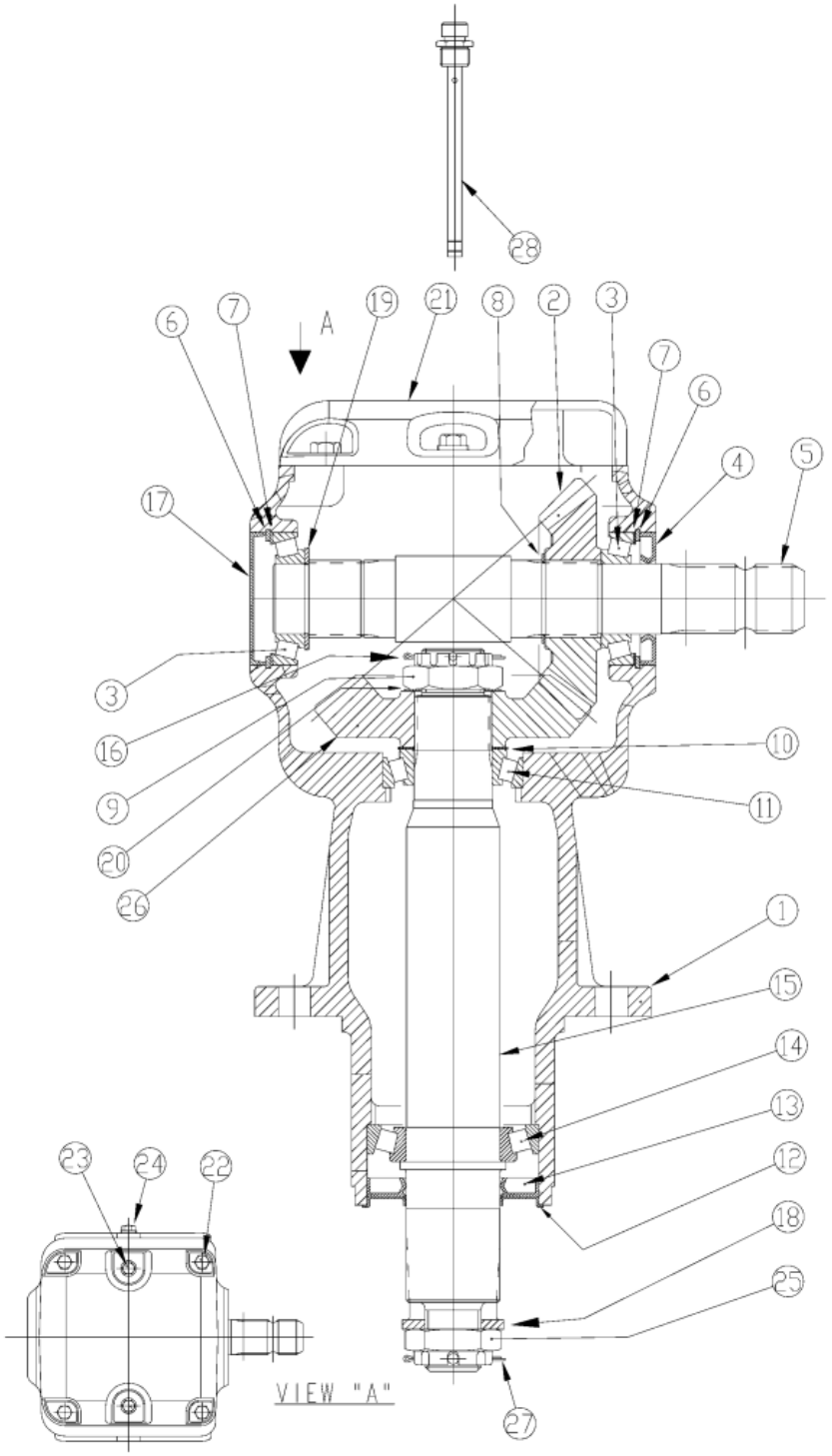

Gearbox (826-731C)

Applies to Models: RCM6610

Ref.	Part No.	Part Description	Comments
	DWG33989	Drawing Image Number	
	826-731C	GBOX RC60 1.15:1 STD	
		*	
1	U0.125.0532.00	CO HOUSING	
2	U0.125.5061.00	CO GEAR PINION Z19 M7.8	
3	8.0.9.00143	CO BRG 30209 TAPPERED	
4	8.7.3.00331	CO OIL SEAL 45 X 85 X 10 SL	
5	U0.125.2050.00	CO INPUT SHAFT 1 3/4"-20	
6	8.5.2.00332	CO SNAP RING UNI 7437	
7	A.709.500	COMER SHIM KIT	
8	8.5.1.00533	CO SNAP RING 50 UNI7435	
9	U0.125.7100.00	CO CASTLE NUT	
10	A.712.500	COMER SHIM KIT	
11	8.0.9.01090	CO BRG 32210 TAPPERED	
12	1.181.7101.00	CO SEAL PROTECTOR	
13	8.7.1.02349	CO OIL SEAL 60X110X12 SL	
14	8.0.9.00079	CO BRG 30212 TAPPERED	
15	U0.125.3003.00	CO OUTPUT SHAFT	
16	8.4.7.02265	CO COTTER PIN B 5X60	
17	0.121.7101.00	CO CAP	
18	0.288.7101.00	CO BLANK WASHER	
19	0.252.7525.00	CO SHIM 45.3X2.5	
20	0.285.7510.00	CO SHIM 40.3 X 61.7 X 1	
21	U0.125.1303.00	CO TOP COVER	
22	8.1.1.00501	CO BOLT M8X22 HHB	
23	8.6.5.00203	CO PLUG 1/2" GAS	
24	8.6.5.00006	CO OIL PLUG 3/8	
25	8.2.2.00560	CO CASTLE NUT M36X3	
26	U0.125.6061.00	CO GEAR CROWN Z22 M7.8	
27	8.4.7.01045	CO COTTER PIN B6X70 SLD-SPRTLY	
28	826-486C	COMER U0.125.7003.00 DIPSTICK	

Gearbox (826-732C)

Applies to Models: RCM6610

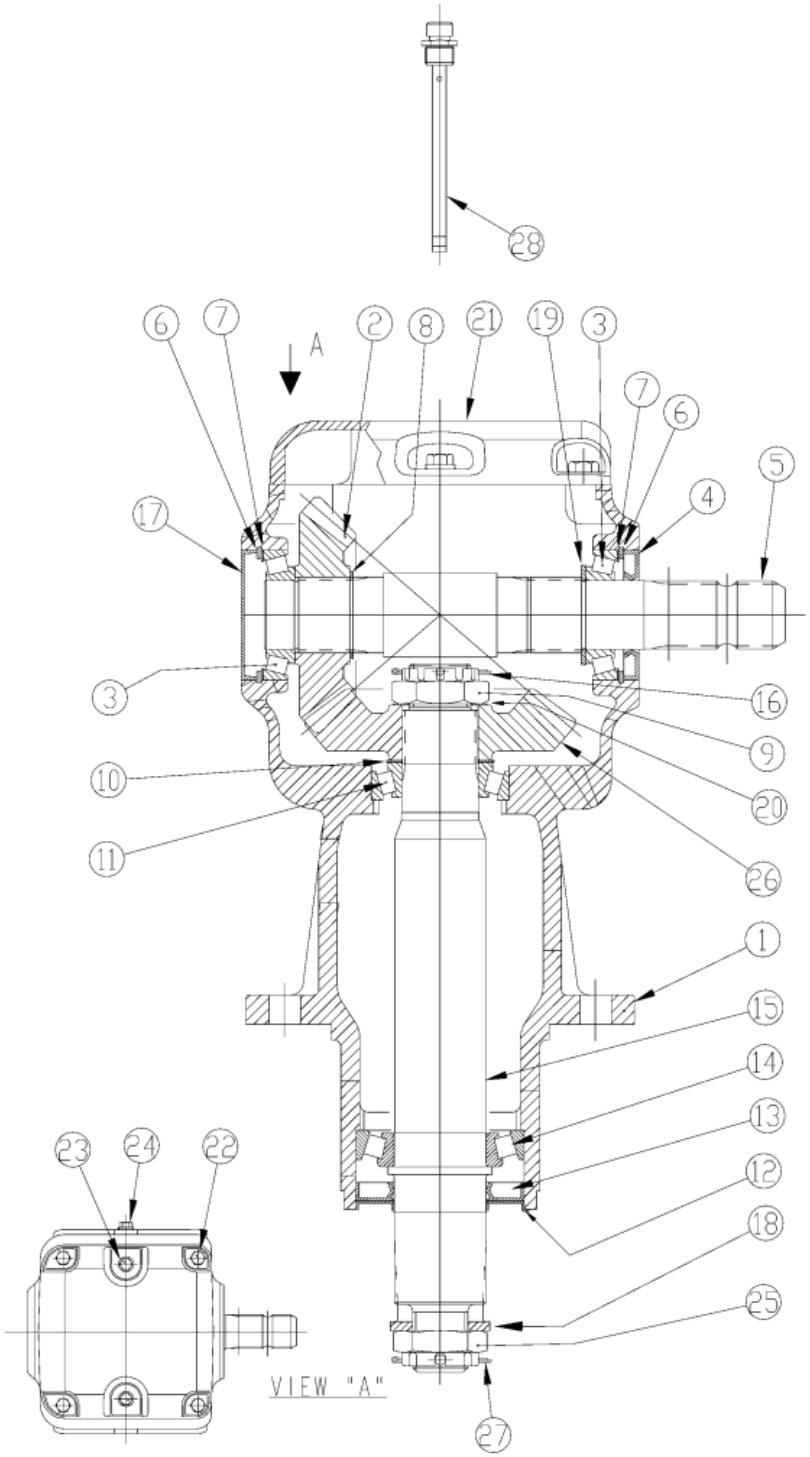

Gearbox (826-732C)

Applies to Models: RCM6610

Ref.	Part No.	Part Description	Comments
	DWG35002	Drawing Image Number	
	826-732C	GBOX RC60 1.15:1 REV *	
1	U0.125.0532.00	CO HOUSING	
2	U0.125.5061.00	CO GEAR PINION Z19 M7.8	
3	8.0.9.00143	CO BRG 30209 TAPPERED	
4	8.7.3.00331	CO OIL SEAL 45 X 85 X 10 SL	
5	U0.125.2050.00	CO INPUT SHAFT 1 3/4"-20	
6	8.5.2.00332	CO SNAP RING UNI 7437	
7	A.709.500	COMER SHIM KIT	
8	8.5.1.00533	CO SNAP RING 50 UNI7435	
9	U0.125.7100.00	CO CASTLE NUT	
10	A.712.500	COMER SHIM KIT	
11	8.0.9.01090	CO BRG 32210 TAPPERED	
12	1.181.7101.00	CO SEAL PROTECTOR	
13	8.7.1.02349	CO OIL SEAL 60X110X12 SL	
14	8.0.9.00079	CO BRG 30212 TAPPERED	
15	U0.125.3003.00	CO OUTPUT SHAFT	
16	8.4.7.02265	CO COTTER PIN B 5X60	
17	0.121.7101.00	CO CAP	
18	0.288.7101.00	CO BLANK WASHER	
19	0.252.7525.00	CO SHIM 45.3X2.5	
20	0.285.7510.00	CO SHIM 40.3 X 61.7 X 1	
21	U0.125.1303.00	CO TOP COVER	
22	8.1.1.00501	CO BOLT M8X22 HHB	
23	8.6.5.00203	CO PLUG 1/2" GAS	
24	8.6.5.00006	CO OIL PLUG 3/8	
25	8.2.2.00560	CO CASTLE NUT M36X3	
26	U0.125.6061.00	CO GEAR CROWN Z22 M7.8	
27	8.4.7.01045	CO COTTER PIN B6X70 SLD-SPRTLY	
28	826-486C	COMER U0.125.7003.00 DIPSTICK	

Gearbox (826-921C) Comer

Applies to Models: RCM5610

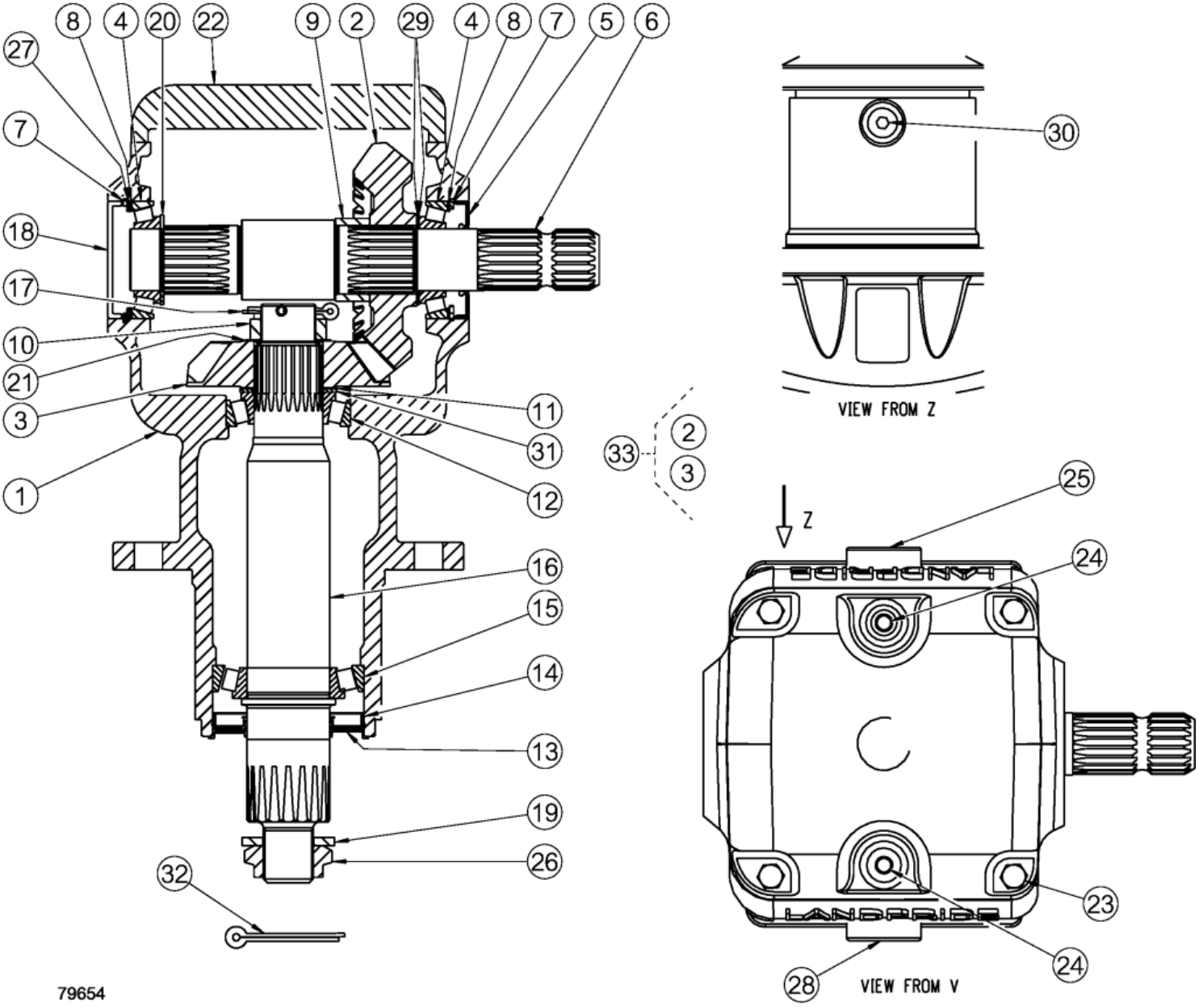

Gearbox (826-921C) Comer

Applies to Models: RCM5610

Ref.	Part No.	Part Description	Comments
	DWG 79654	Drawing Image Number	
	826-921C	GBOX RCM50 1:1.21 STD	
		*	
1	0.125.0545.00	COMER HOUSING	
2	0.125.6010.00	CO FORGED BEVEL GEAR M7.8 Z22	
3	0.125.5010.00	CO FORGED BEVEL GEAR M1.8 Z18	
4	8.0.9.00143	COMER BEARING 30209 TAPERED	
5	9020.345.010	CO DOUBLE LIP SEAL 45X85X10	
6	0.125.2002.00	CO SHAFT	
7	8.5.2.00332	COMER SNAP RING INT D85 UNI7437	
8	A.709.500	COMER SHIM KIT 70.3X84.7	
9	0.125.7038.00	CO SPACER 50x60x25	
10	U0.125.7100.00	COMER CASTLE NUT M40X1.5	
11	A.712.500	COMER SHIM KIT 50.3X70.3	
12	8.0.9.01090	CO BRG 32210 (50X90X24.75)	
13	1.181.7101.00	CO SEAL PROTECTOR	
14	9020.448.020	CO OIL SEAL NAK NBR 60X110X12	
15	8.0.9.00079	CO BRG 30212 (60X110X23.75)	
16	0.125.3017.00	COMER OUTPUT SHAFT	
17	8.4.7.02265	CO COTTER PIN B 5X60	
18	0.121.7101.00	COMER CAP 85X10	
19	0.288.7101.00	CO BLANK WASHER	
20	0.252.7525.00	COMER SHIM 65.3X45.3X2.5	
21	0.285.7510.00	CO SHIM 40.3 X 61.7 X 1	
22	U0.125.1303.00	CO TOP COVER	
23	8.1.1.00501	COMER HHB M10X22 GR8.8	
24	8.6.6.02901	CO GAS PLUG 1/2"	
25	8.6.4.02647	CO LEV. SIGHT GLASS 3/4"	
26	8.2.2.00560	CO CASTLE NUT M36X3	
27	0.709.7520.00	CO SHIM 70.3X84.7X2	
28	9510.300.800	CO PLUG 3/4"GAS+O-RING	
29	0.252.7510.00	CO SHIM (45.3X65.3X1)	
30	8.6.6.02856	CO PLUG 3/8" GAS	
31	0.712.7525.00	CO SHIM 50.3X70.3X2.5	
32	8.4.7.01045	CO COTTER PIN B6X70 SLD-SPRTLY	
33	2.125.5002.00	CO BEVEL GEAR SET M7.8 Z18-22	
		*	
		Notes: Oil Type 80-90W Capacity 10 Pints	

Gearbox (826-923C) Comer

Applies to Models: RCM5610

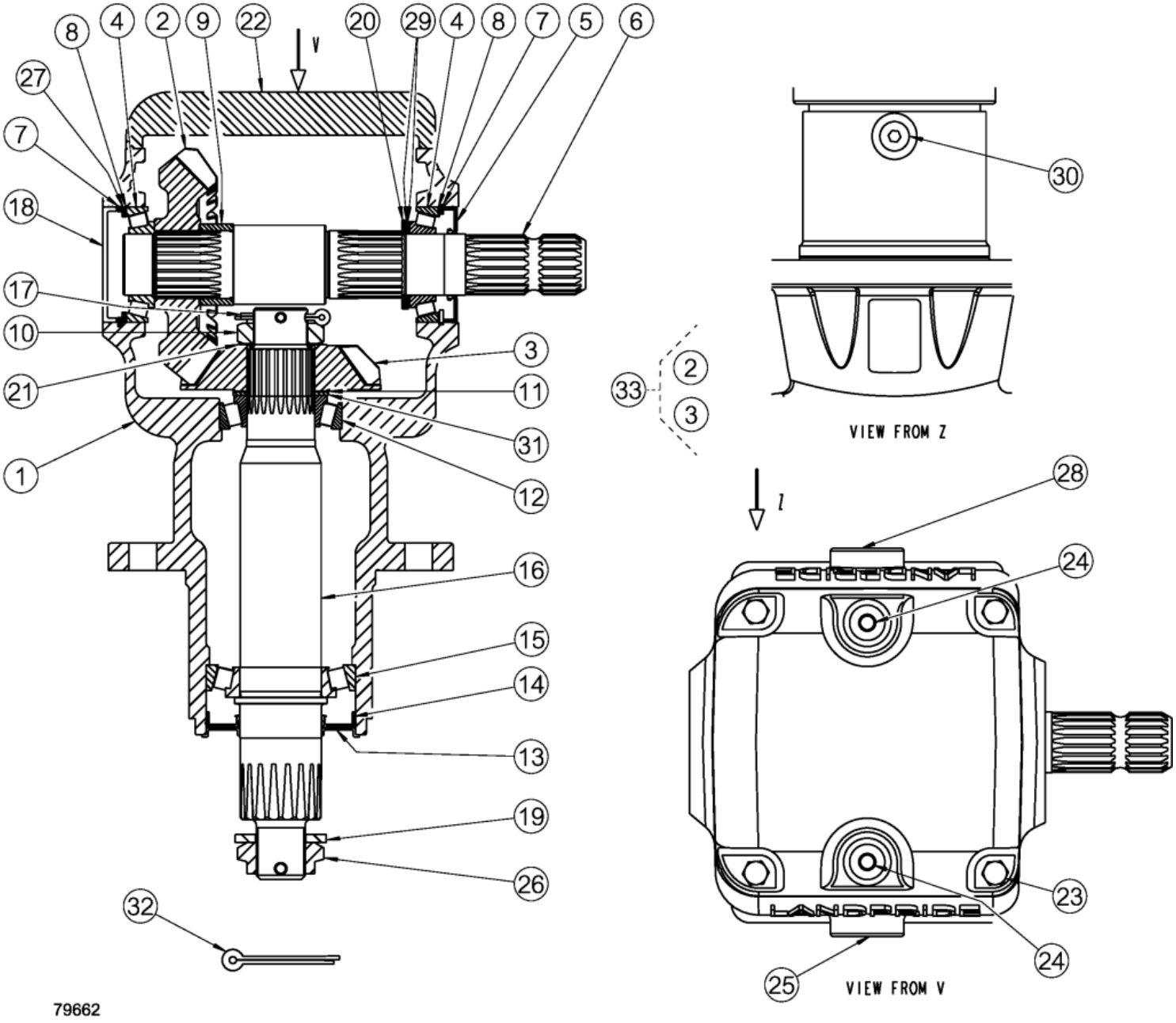

Gearbox (826-923C) Comer

Applies to Models: RCM5610

Ref.	Part No.	Part Description	Comments
	DWG 79662	Drawing Image Number	
	826-923C	GBOX RCM50 1:1.21 REV *	Complete Assembly
1	0.125.0545.00	COMER HOUSING	
2	0.125.6010.00	CO FORGED BEVEL GEAR M7.8 Z22	
3	0.125.5010.00	CO FORGED BEVEL GEAR M1.8 Z18	
4	8.0.9.00143	COMER BEARING 30209 TAPERED	
5	9020.345.010	CO DOUBLE LIP SEAL 45X85X10	
6	0.125.2002.00	CO SHAFT	
7	8.5.2.00332	COMER SNAP RING INT D85 UNI7437	
8	A.709.500	COMER SHIM KIT 70.3X84.7	
9	0.125.7038.00	CO SPACER 50x60x25	
10	U0.125.7100.00	COMER CASTLE NUT M40X1.5	
11	A.712.500	COMER SHIM KIT 50.3X70.3	
12	8.0.9.01090	CO BRG 32210 (50X90X24.75)	
13	1.181.7101.00	CO SEAL PROTECTOR	
14	9020.448.020	CO OIL SEAL NAK NBR 60X110X12	
15	8.0.9.0079	CO TAPERED ROLLER BRG 30212	
16	0.125.3017.00	COMER OUTPUT SHAFT	
17	8.4.7.02265	CO COTTER PIN B 5X60	
18	0.121.7101.00	COMER CAP 85X10	
19	0.288.7101.00	CO BLANK WASHER	
20	0.252.7525.00	COMER SHIM 65.3X45.3X2.5	
21	0.285.7510.00	CO SHIM 40.3 X 61.7 X 1	
22	U0.125.1303.00	CO TOP COVER	
23	8.1.1.00501	COMER HHB M10X22 GR8.8	
24	8.6.6.02901	CO GAS PLUG 1/2"	
25	8.6.4.02647	CO LEV. SIGHT GLASS 3/4"	
26	8.2.2.00560	CO CASTLE NUT M36X3	
27	0.709.7520.00	CO SHIM 70.3X84.7X2	
28	9510.300.800	CO PLUG 3/4"GAS+O-RING	
29	0.252.7510.00	CO SHIM (45.3X65.3X1)	
30	8.6.6.02856	CO PLUG 3/8" GAS	
31	0.712.7525.00	CO SHIM 50.3X70.3X2.5	
32	8.4.7.01045	CO COTTER PIN B6X70 SLD-SPRTLY	
33	2.125.5002.00	CO BEVEL GEAR SET M7.8 Z18-22 *	
		Notes: Oil Type 80-90W Capacity 10 Pints	

Gearbox (826-928C) Comer

Applies to Models: RCM5610

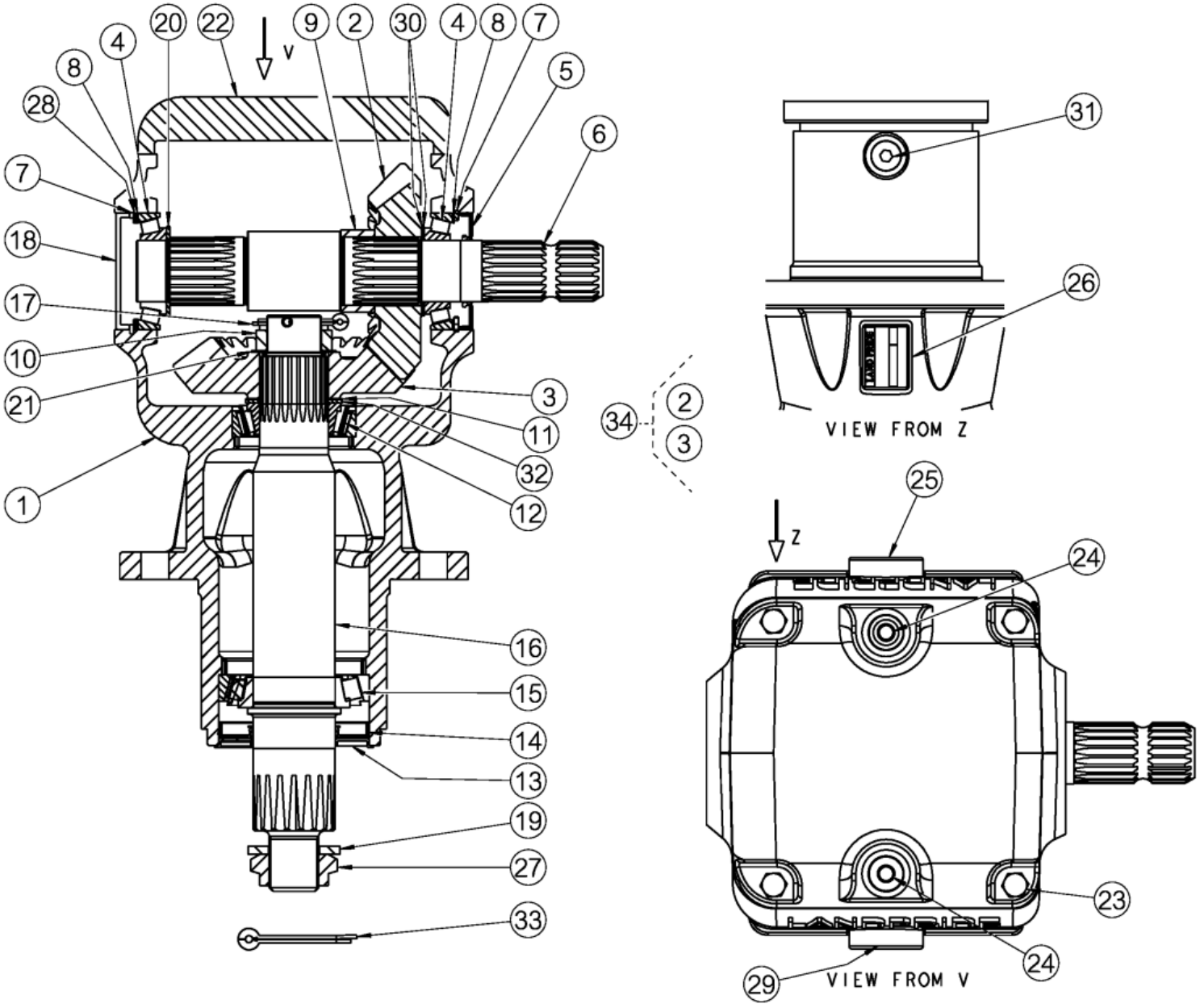

79625

Gearbox (826-928C) Comer

Applies to Models: RCM5610

Ref.	Part No.	Part Description	Comments
	DWG 79625	Drawing Image Number	
	826-928C	GBOX RC50 1.15:1 STD *	Complete Assembly
1	0.125.0545.00	COMER HOUSING	
2	0.125.5012.00	CO FORGED BEVEL GEAR M1.8 Z19	
3	0.125.6012.00	CO FORGED BEVEL GEAR M1.8 Z22	
4	8.0.9.00143	COMER BEARING 30209 TAPERED	
5	9020.345.010	CO DOUBLE LIP SEAL 45X85X10	
6	0.125.2002.00	CO SHAFT	
7	8.5.2.00332	COMER SNAP RING INT D85 UNI7437	
8	A.709.500	COMER SHIM KIT 70.3X84.7	
9	0.125.7038.00	CO SPACER 50x60x25	
10	U0.125.7100.00	COMER CASTLE NUT M40X1.5	
11	A.712.500	COMER SHIM KIT 50.3X70.3	
12	8.0.9.01090	CO BRG 32210 (50X90X24.75)	
13	1.181.7101.00	CO SEAL PROTECTOR	
14	9020.448.020	CO OIL SEAL NAK NBR 60X110X12	
15	8.0.9.00079	CO BRG 30212 (60X110X23.75)	
16	0.125.3017.00	COMER OUTPUT SHAFT	
17	8.4.7.02265	CO COTTER PIN B 5X60	
18	0.121.7101.00	COMER CAP 85X10	
19	0.288.7101.00	CO BLANK WASHER	
20	0.252.7525.00	COMER SHIM 65.3X45.3X2.5	
21	0.285.7510.00	CO SHIM 40.3 X 61.7 X 1	
22	U0.125.1303.00	CO TOP COVER	
23	8.1.1.00501	COMER HHB M10X22 GR8.8	
24	8.6.6.02901	CO GAS PLUG 1/2"	
25	8.6.4.02647	CO LEV. SIGHT GLASS 3/4"	
26	0.141.7109.00	CO NAME PLATE	
27	8.2.2.00560	CO CASTLE NUT M36X3	
28	0.709.7520.00	CO SHIM 70.3X84.7X2	
29	9510.300.800	CO PLUG 3/4"GAS+O-RING	
30	0.252.7510.00	CO SHIM (45.3X65.3X1)	
31	8.6.6.02856	CO PLUG 3/8" GAS	
32	0.712.7525.00	CO SHIM 50.3X70.3X2.5	
33	8.4.7.01045	CO COTTER PIN B6X70 SLD-SPRTLY	
34	2.125.5004.00	CO BEVEL GEAR SET Z19-Z22 M7.8 *	
		Notes: Oil Type 80-90W Capacity 10 Pints	

Gearbox 1000 RPM (826-319C)

Applies to Models: RCM5610

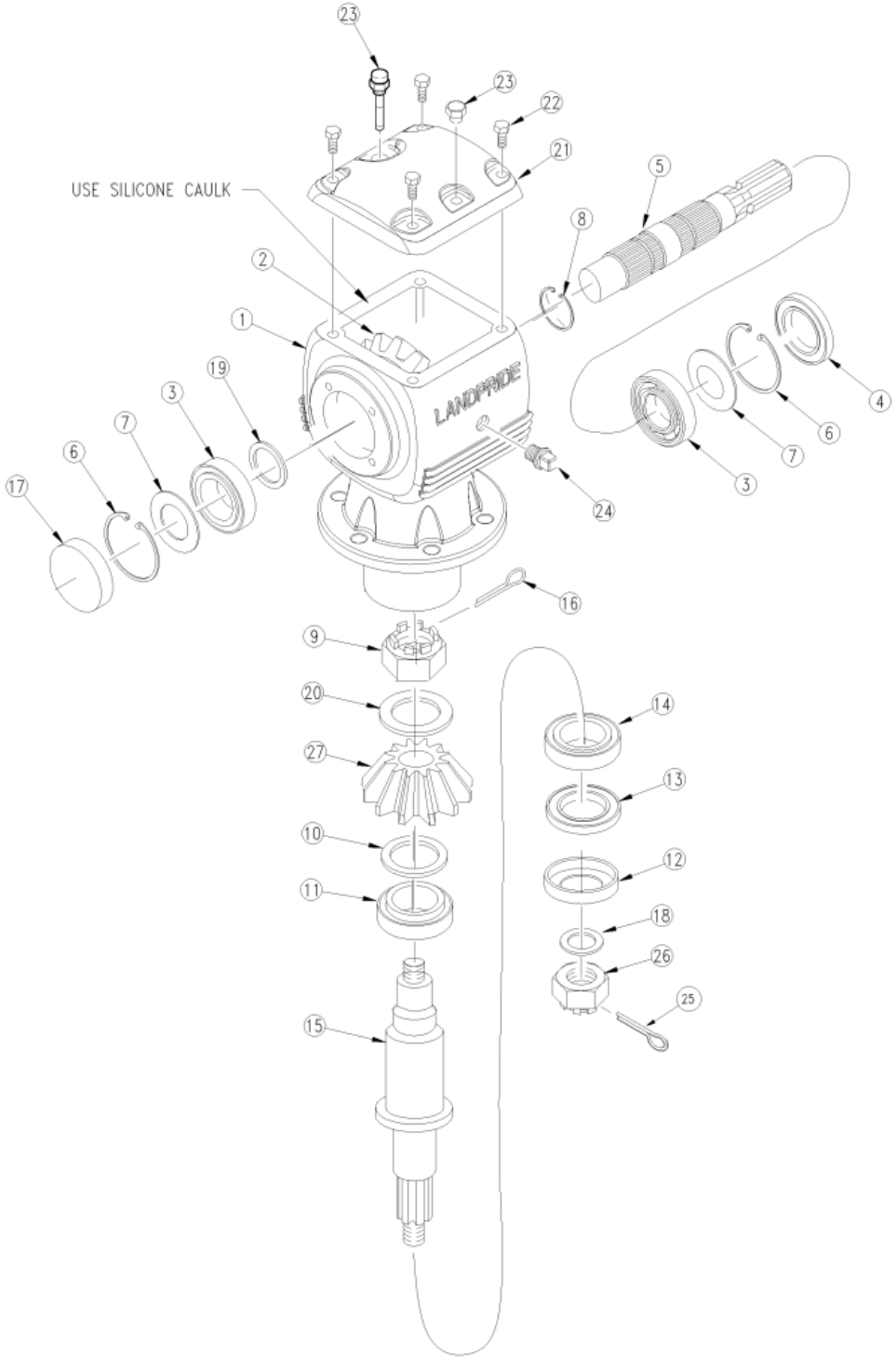

Gearbox 1000 RPM (826-319C)

Applies to Models: RCM5610

Ref.	Part No.	Part Description	Comments
	DWG 21171	Drawing Image Number	
	826-319C	RPBY 826-923C	Complete assembly (R. H. Deck)
		*	
1	U0.125.0531.00	CO HOUSING	
2	U0.125.5003.00	CO CROWN GEAR Z22 M7.8	
3	8.0.9.00143	CO BEARING 30209 RTA25	
4	8.7.3.00331	CO OIL SEAL 45 X 85 X 10	
5	U0.125.2050.00	CO INPUT SHAFT 1 3/4"-20	
6	8.5.2.00332	CO SNAP RING UNI 7437	
7	0.709.7500.00	CO SHIM 84.7	
8	8.5.1.00533	CO SNAP RING 50 UNI7435	
9	U0.125.7100.00	CO CASTLE NUT	
10	0.712.7500.00	CO SHIM 50.3X70.3	
11	8.0.9.01090	CO BEARING 32210	
12	1.181.7101.00	CO SEAL PROTECTOR	
13	8.7.1.02349	CO OIL SEAL 60X110X12	
14	8.0.9.00079	CO BEARING 30212	
15	U0.125.3002.00	CO OUTPUT SHAFT	
16	8.4.7.02265	CO COTTER PIN B 5X60	
17	0.121.7101.00	CO CAP	
18	0.288.7101.00	CO BLANK WASHER	
19	0.252.7525.00	CO SHIM 45.3X2.5	
20	0.285.7510.00	CO SHIM 40.3 X 61.7 X 1	
21	U0.125.1301.00	CO COVER	
22	8.1.1.00501	CO BOLT M8X22 HHB	
23	826-486C	COMER U0.125.7003.00 OIL PLUG	
24	8.6.5.00006	CO OIL PLUG 3/8	
25	8.4.7.01045	CO COTTER PIN B6X70 SLD-SPRTLY	
26	8.2.2.00560	CO CASTLE NUT M36X3	
27	U0.125.6003.00	CO CROWN GEAR Z18 M7.8	

Gearbox 1000 RPM (826-324C)

Applies to Models: RCM6610

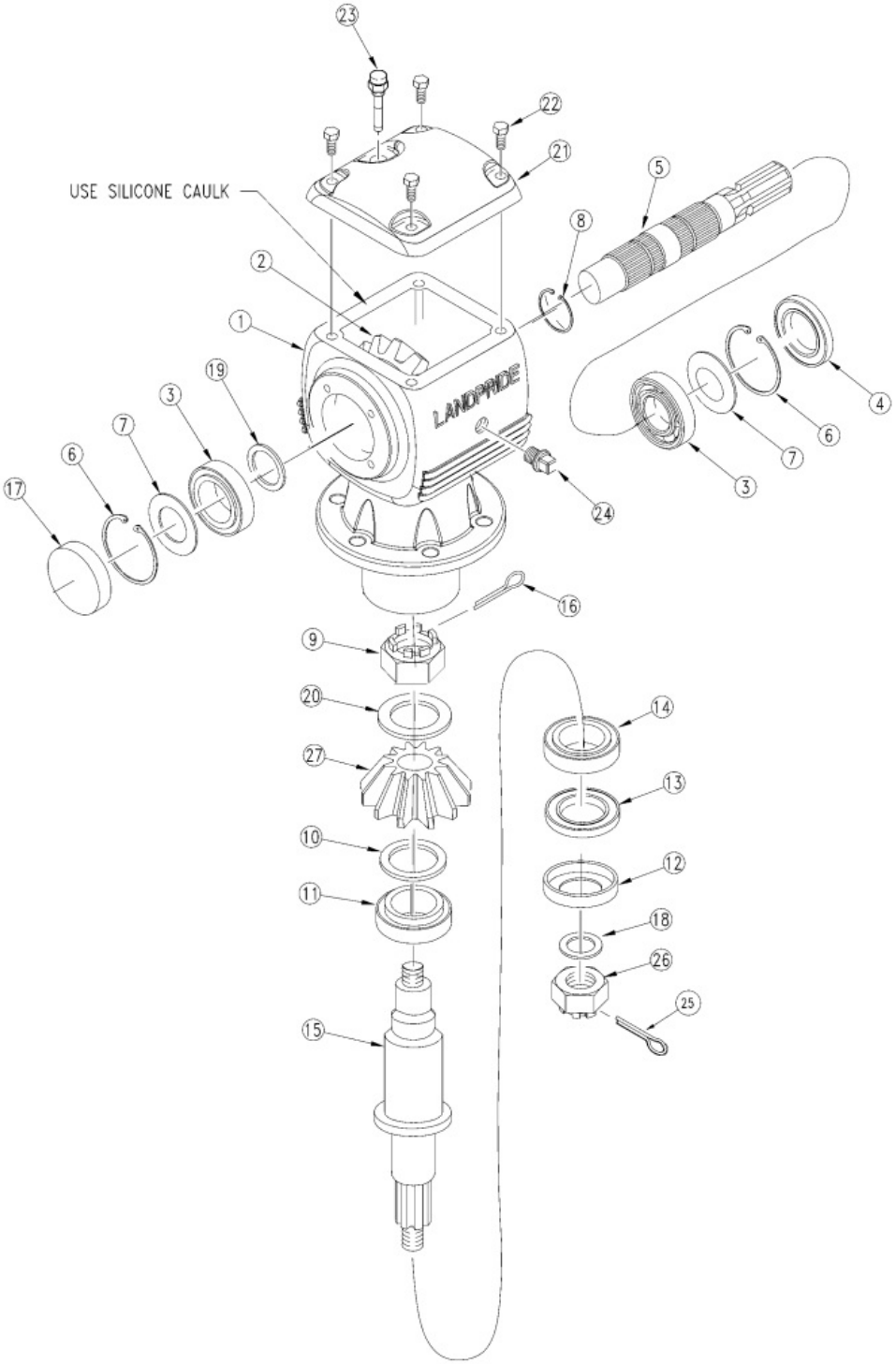

Gearbox 1000 RPM (826-324C)

Applies to Models: RCM6610

Ref.	Part No.	Part Description	Comments
	DWG24726	Drawing Image Number	
	826-324C	GBOX RCM60 1.75-20 1:1.21 CW	
		*	
1	U0.125.0532.00	CO HOUSING	
2	U0.125.5003.00	CO CROWN GEAR Z22 M7.8	
3	8.0.9.00143	CO BEARING 30209 RTA25	
4	8.7.3.00331	CO OIL SEAL 45 X 85 X 10	
5	U0.125.2050.00	CO INPUT SHAFT 1 3/4"-20	
6	8.5.2.00332	CO SNAP RING UNI 7437	
7	A.709.500	COMER SHIM KIT	
8	8.5.1.00533	CO SNAP RING 50 UNI7435	
9	U0.125.7100.00	CO CASTLE NUT	
10	A.712.500	COMER SHIM KIT	
11	8.0.9.01090	CO BEARING 32210	
12	1.181.7101.00	CO SEAL PROTECTOR	
13	8.7.1.02349	CO OIL SEAL 60X110X12	
14	8.0.9.00079	CO BEARING 30212	
15	U0.125.3003.00	CO OUTPUT SHAFT	
16	8.4.7.02265	CO COTTER PIN B 5X60	
17	0.121.7101.00	CO CAP	
18	0.288.7101.00	CO BLANK WASHER	
19	0.252.7525.00	CO SHIM 45.3X2.5	
20	0.285.7510.00	CO SHIM 40.3 X 61.7 X 1	
21	U0.125.1301.00	CO COVER	
22	8.1.1.00501	CO BOLT M8X22 HHB	
23	826-486C	COMER U0.125.7003.00 OIL PLUG	
24	8.6.5.00006	CO OIL PLUG 3/8	
25	8.4.7.01045	CO COTTER PIN B6X70 SLD-SPRTLY	
26	8.2.2.00560	CO CASTLE NUT M36X3	
27	U0.125.6003.00	CO CROWN GEAR Z18 M7.8	
		*	
		Notes: Oil Type 80-90W Capacity 10 Pints	

Gearbox 1000 RPM (826-725C)

Applies to Models: RCM5610

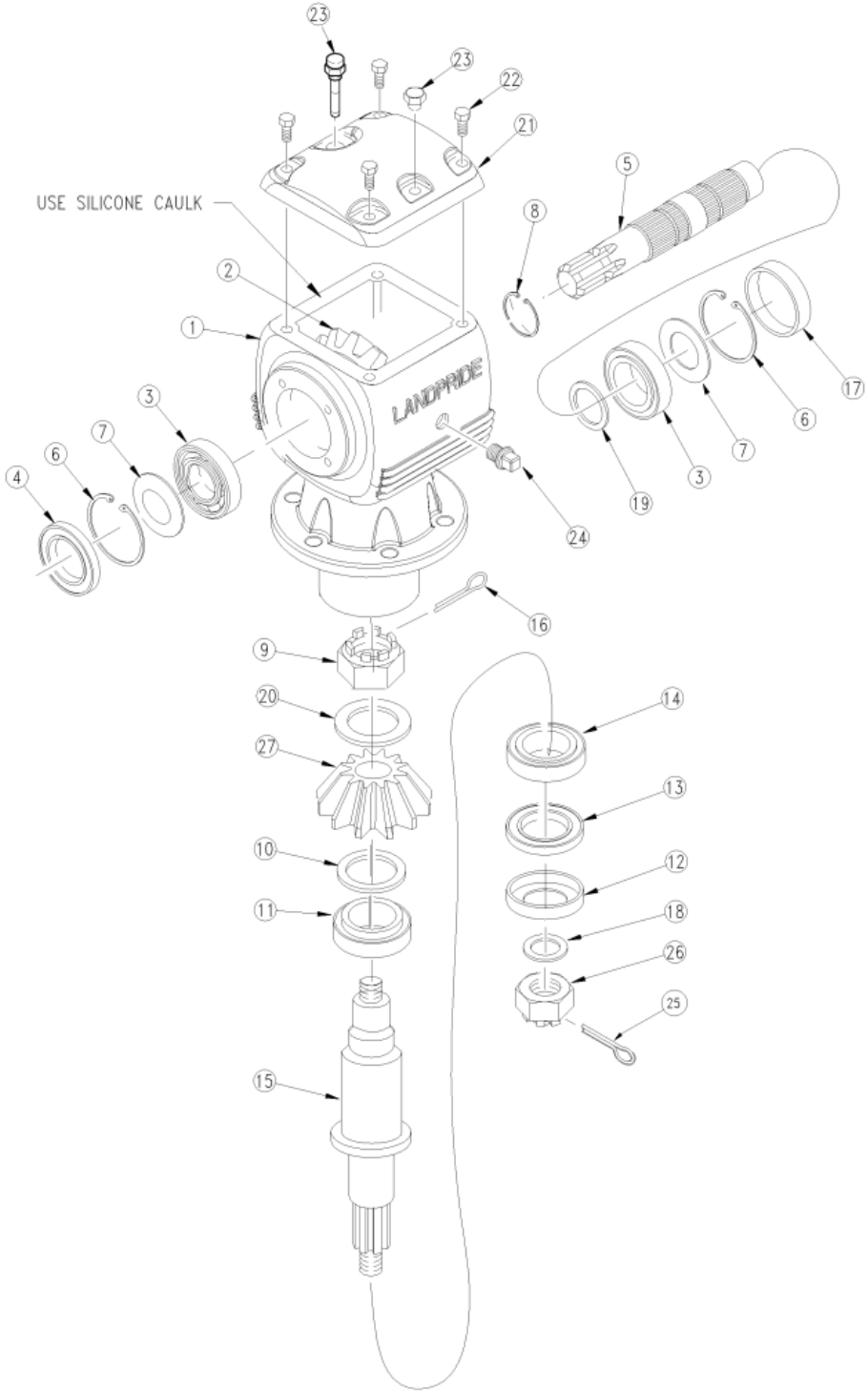

Gearbox 1000 RPM (826-725C)

Applies to Models: RCM5610

Ref.	Part No.	Part Description	Comments
	DWG 33338	Drawing Image Number	
	826-725C	GBOX RC50 1.15:1 STD *	Complete assembly (Center Deck)
1	U0.125.0531.00	CO HOUSING	
2	U0.125.5061.00	CO GEAR PINION Z19 M7.8	
3	8.0.9.00143	CO BEARING 30209 RTA25	
4	8.7.3.00331	CO OIL SEAL 45 X 85 X 10	
5	U0.125.2050.00	CO INPUT SHAFT 1 3/4"-20	
6	8.5.2.00332	CO SNAP RING UNI 7437	
7	0.709.7500.00	CO SHIM 84.7	
8	8.5.1.00533	CO SNAP RING 50 UNI7435	
9	U0.125.7100.00	CO CASTLE NUT	
10	0.712.7500.00	CO SHIM 50.3X70.3	
11	8.0.9.01090	CO BEARING 32210	
12	1.181.7101.00	CO SEAL PROTECTOR	
13	8.7.1.02349	CO OIL SEAL 60X110X12	
14	8.0.9.00079	CO BEARING 30212	
15	U0.125.3002.00	CO OUTPUT SHAFT	
16	8.4.7.02265	CO COTTER PIN B 5X60	
17	0.121.7101.00	CO CAP	
18	0.288.7101.00	CO BLANK WASHER	
19	0.252.7525.00	CO SHIM 45.3X2.5	
20	0.285.7510.00	CO SHIM 40.3 X 61.7 X 1	
21	U0.125.1301.00	CO COVER	
22	8.1.1.00501	CO BOLT M8X22 HHB	
23	826-486C	COMER U0.125.7003.00 OIL PLUG	
24	8.6.5.00006	CO OIL PLUG 3/8	
25	8.4.7.01045	CO COTTER PIN B6X70 SLD-SPRTLY	
26	8.2.2.00560	CO CASTLE NUT M36X3	
27	U0.125.6061.00	CO GEAR CROWN Z22 M7.8 *	
		Notes: Oil Type 80-90W Capacity 10 Pints	

Gearbox 1000 RPM LH & RH (826-317C)

Applies to Models: RCM5610

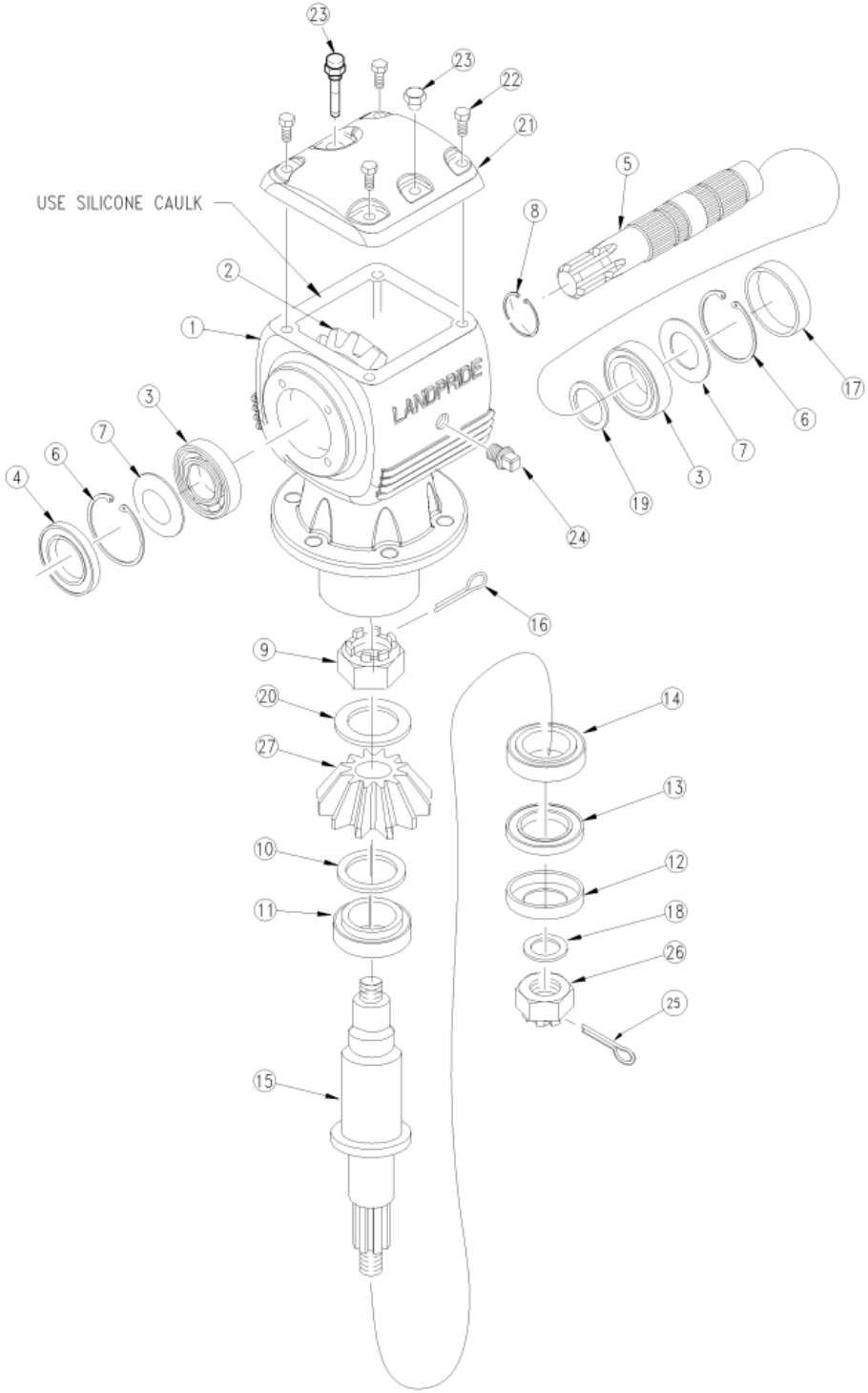

Gearbox 1000 RPM LH & RH (826-317C)

Applies to Models: RCM5610

Ref.	Part No.	Part Description	Comments
	DWG 21167	Drawing Image Number	
	826-317C	RPBY 826-921C	Complete assembly
		*	
1	U0.125.0531.00	NA	
2	U0.125.5003.00	CO CROWN GEAR Z22 M7.8	
3	8.0.9.00143	CO BEARING 30209 RTA25	
4	8.7.3.00331	CO OIL SEAL 45 X 85 X 10	
5	U0.125.2050.00	CO INPUT SHAFT 1 3/4"-20	
6	8.5.2.00332	CO SNAP RING UNI 7437	
7	0.709.7500.00	CO SHIM 84.7	
8	8.5.1.00533	CO SNAP RING 50 UNI7435	
9	U0.125.7100.00	CO CASTLE NUT	
10	0.712.7500.00	CO SHIM 50.3X70.3	
11	8.0.9.01090	CO BEARING 32210	
12	1.181.7101.00	CO SEAL PROTECTOR	
13	8.7.1.02349	CO OIL SEAL 60X110X12	
14	8.0.9.00079	CO BEARING 30212	
15	U0.125.3002.00	CO OUTPUT SHAFT	
16	8.4.7.02265	CO COTTER PIN B 5X60	
17	0.121.7101.00	CO CAP	
18	0.288.7101.00	CO BLANK WASHER	
19	0.252.7525.00	CO SHIM 45.3X2.5	
20	0.285.7510.00	CO SHIM 40.3 X 61.7 X 1	
21	U0.125.1301.00	CO COVER	
22	8.1.1.00501	CO BOLT M8X22 HHB	
23	826-486C	COMER U0.125.7003.00 OIL PLUG	
24	8.6.5.00006	CO OIL PLUG 3/8	
25	8.4.7.01045	CO COTTER PIN B6X70 SLD-SPRTLY	
26	8.2.2.00560	CO CASTLE NUT M36X3	
27	U0.125.6003.00	CO CROWN GEAR Z18 M7.8	
		*	
		Notes: Oil Type 80-90W Capacity 10 Pints	

Gearbox Divider 1000 RPM (826-521C) Comer

Applies to Models: RCM5610, RCM6610

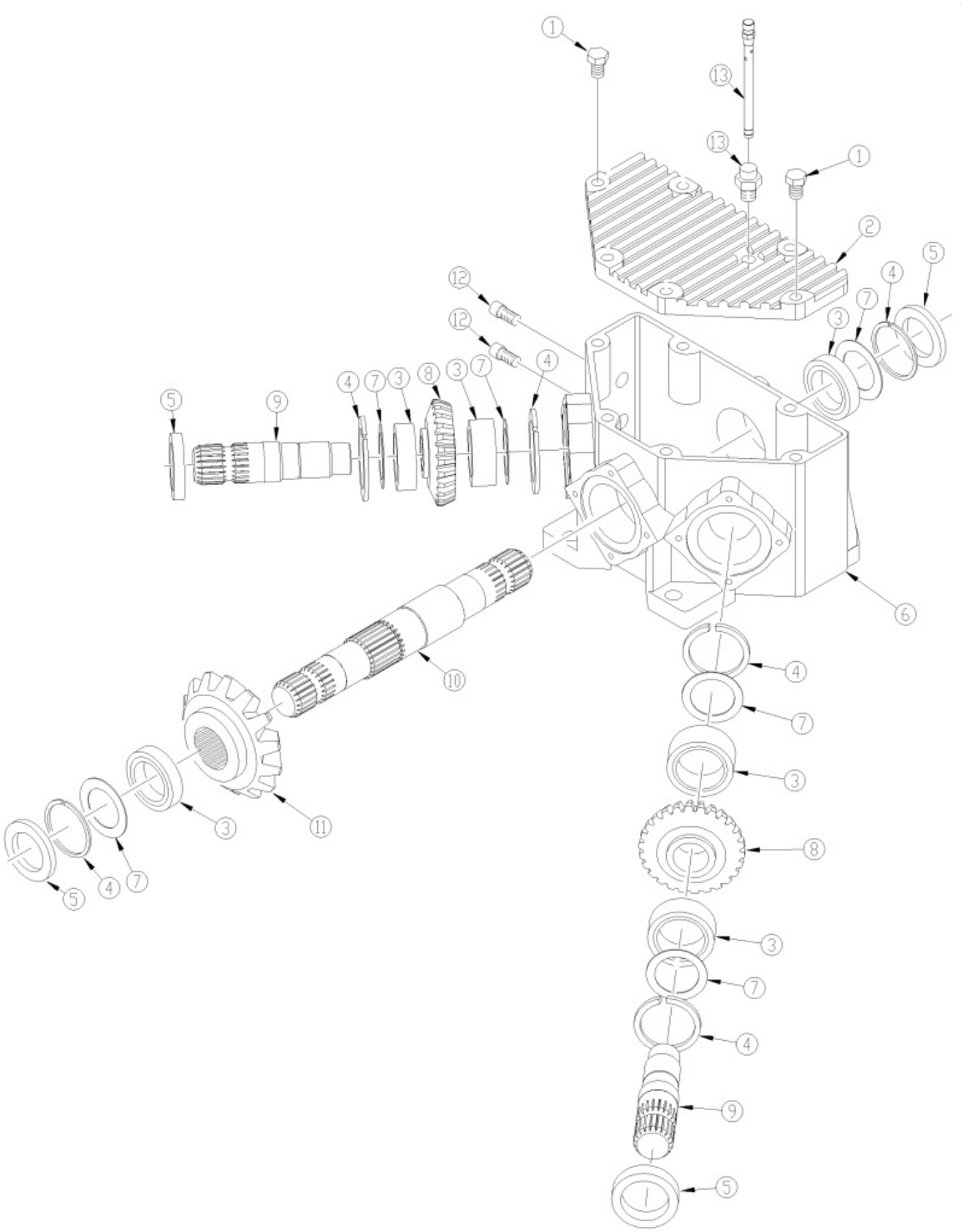

Gearbox Divider 1000 RPM (826-521C) Comer

Applies to Models: RCM5610, RCM6610

Ref.	Part No.	Part Description	Comments
	DWG 26960	Drawing Image Number	
	826-521C	DIV BOX COMER 1000RPM 1 3/4-20 *	Complete assembly
1	8.1.1.00109	CO BOLT M10 X 35 8.8	
2	0.305.1300.00	TOP COVER PLATE	
3	8.0.9.00143	CO BEARING 30209 RTA25	
4	8.5.2.01772	CO SNAP RING	
5	8.7.3.00331	CO OIL SEAL 45 X 85 X 10	
6	0.305.0300.01	CO CASING	
7	0.709.7500.00	CO SHIM 84.7	
8		RPBY A.305.501	
9	0.305.3000.00	CO SHAFT 1" 3/4 Z20	
10	0.305.2000.00	CO SHAFT 1" 3/4 Z20	
11		RPBY A.305.501	
12	8.6.6.00201	CO PLUG 3/8 GAS	
13	826-848C	COMER 0.340.7101.00 DIPSTICK	
14	A.305.501	CO TRIAD GEAR Z20-Z24-Z24 M6.5 *	Contains 2 of gear #8 and 1 of gear #11
		Notes: Oil Type 80-90W Capacity 5.5 Pints	

Gearbox Divider 1000 RPM (826-521C) ITG

Applies to Models: RCM5610, RCM6610

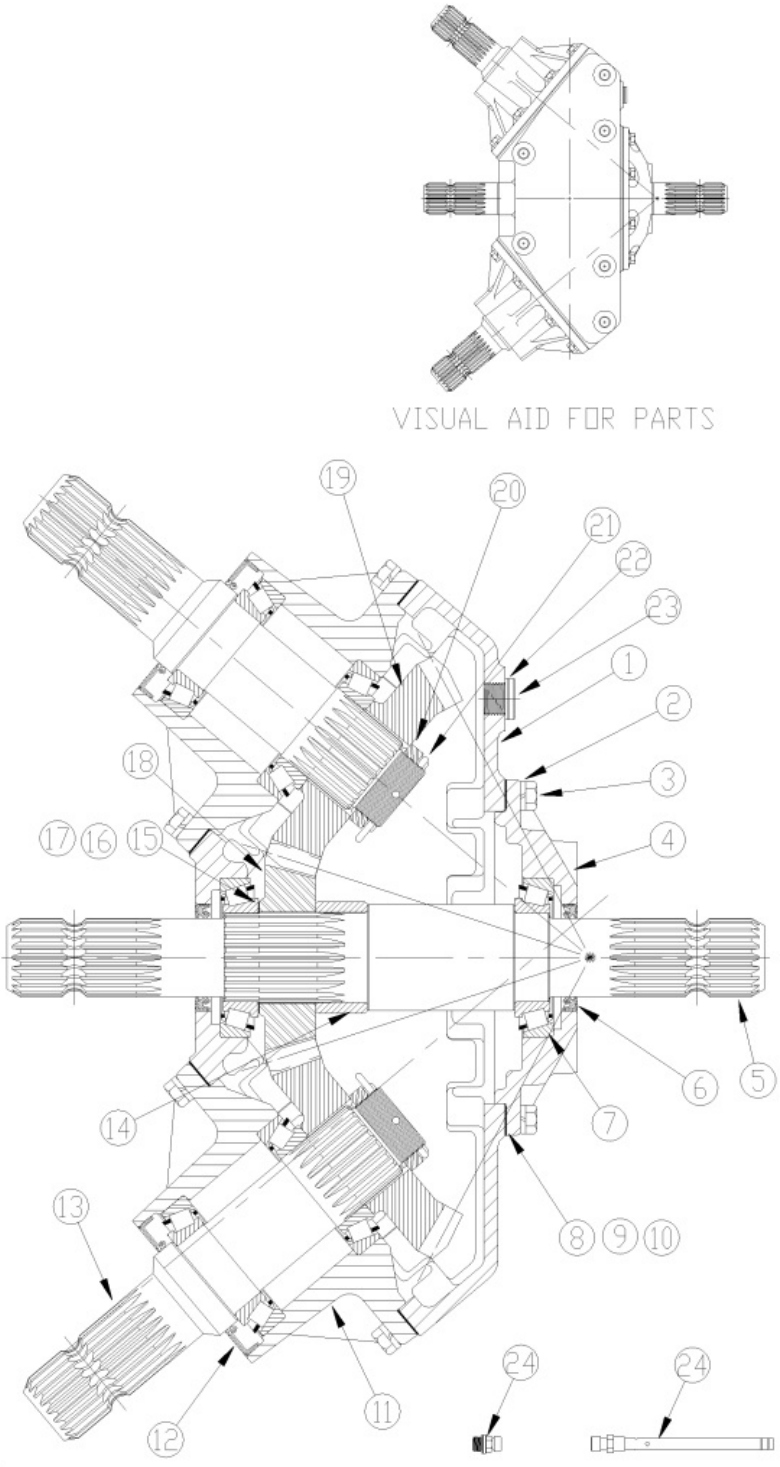

Gearbox Divider 1000 RPM (826-521C) ITG

Applies to Models: RCM5610, RCM6610

Ref.	Part No.	Part Description	Comments
	DWG 25682	Drawing Image Number	
	826-521C	DIV BOX 1000RPM 1 3/4-20 *	Complete assembly
1	18-059	ITG HOUSING	
2	804-158C	WASHER SPRING LOCK M10 PLT	
3	06-003	ITG M10 X 1.5 X 30 CAP SCREW	
4	20-019	ITG INPUT CAP SPLITTER BOX	
5	02-038	ITG INPUT SHAFT	
6	05-007	ITG INPUT SHAFT OIL SEAL	
7	04-011	ITG BRG ASSEMBLY	
8	08-006	ITG INPUT CAP GASKET 0.10MM	
9	08-007	ITG INPUT CAP GASKET 0.25MM	
10	08-008	ITG IN & OUT CAP GASKET 0.45MM	
11	20-018	ITG HORIZONTAL HUB CAP	
12	05-012B	ITG OUTPUT SEAL 58X95X10 THK	
13	02-039	ITG OUTPUT SHAFT	
14	10-001	ITG SPACER	
15	17-002	ITG SHIM 0.3	
16	17-001	ITG SHIM 0.4	
17	17-003	ITG SHIM 0.5	
18	03-126	19 TOOTH GEAR	
19	03-127	ITG 23 TOOTH GEAR	
20	11-012	ITG BRG ADJ. NUT	
21	12-008	ITG COTTER PIN	
22	07-022	ITG SEALING WASHER	
23	09013	RPBY 802-594C	
24	16-110	ITG M10X1.5 DIP STICK BREATHER *	
		Notes: Oil Type 80-90W Capacity 5.5 Pints	

Gearbox (826-650C) Comer

Applies to Models: RC5610

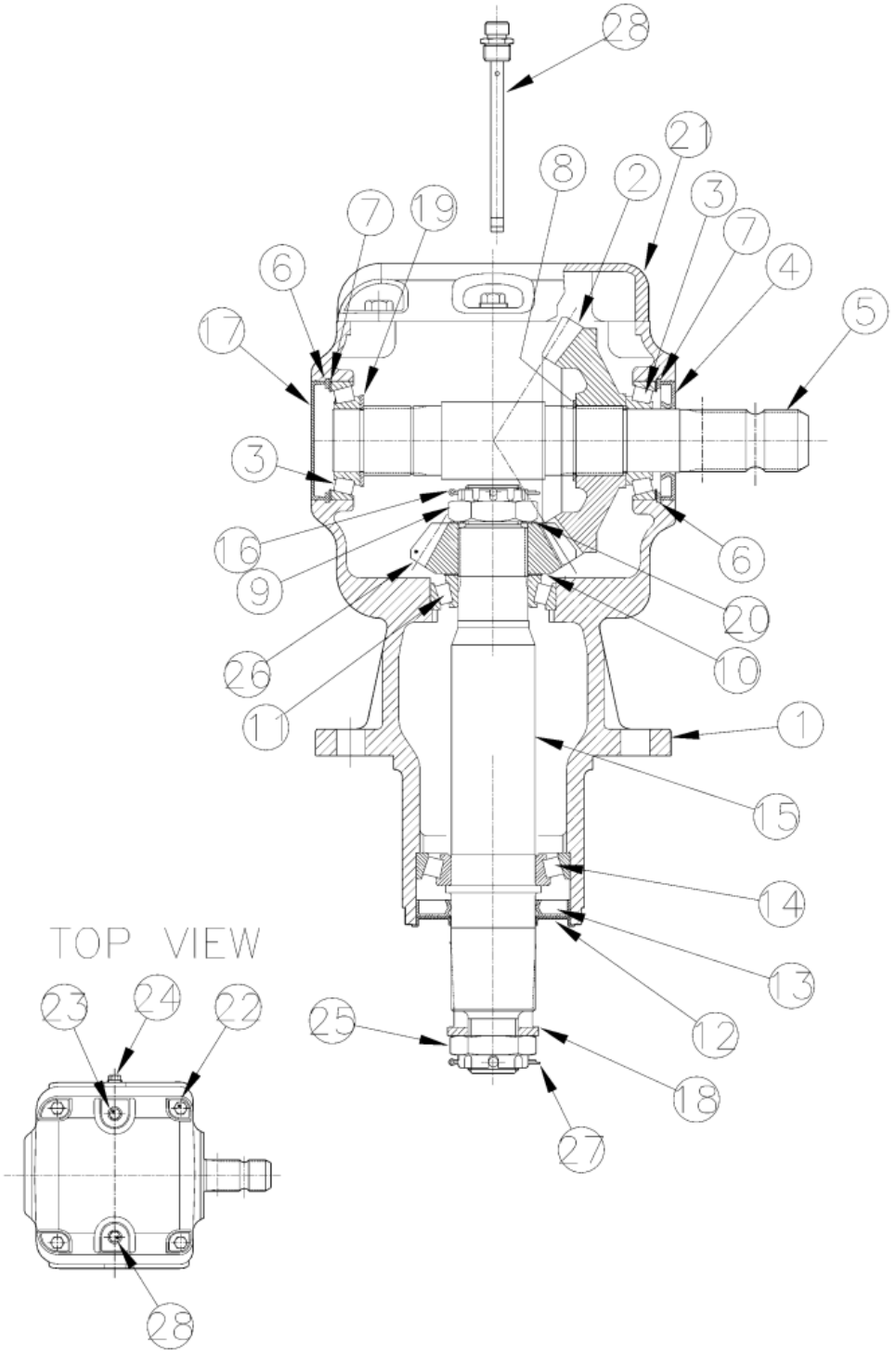

Gearbox (826-650C) Comer

Applies to Models: RC5610

Ref.	Part No.	Part Description	Comments
	DWG 30528	Drawing Image Number	
	826-650C	GBOX RCF36 1.75-20 1:1.60 CCW *	Complete assembly
1	U0.125.0531.00	CO HOUSING	
2	U0.125.6053.00	CO GEAR CROWN Z24 M7.25	
3	8.0.9.00143	CO BRG 30209 TAPPERED	
4	8.7.3.00331	CO OIL SEAL 45 X 85 X 10 SL	
5	U0.125.2050.00	CO INPUT SHAFT 1 3/4"-20	
6	8.5.2.00332	CO SNAP RING UNI 7437	
7	A.709.500	COMER SHIM KIT	
8	8.5.1.00533	CO SNAP RING 50 UNI7435	
9	U0.125.7100.00	CO CASTLE NUT	
10	A.712.500	COMER SHIM KIT	
11	8.0.9.01090	CO BRG 32210 TAPPERED	
12	1.181.7101.00	CO SEAL PROTECTOR	
13	8.7.1.02349	CO OIL SEAL 60X110X12 SL	
14	8.0.9.00079	CO BRG 30212 TAPPERED	
15	U0.125.3002.00	CO OUTPUT SHAFT	
16	8.4.7.02265	CO COTTER PIN B 5X60	
17	0.121.7101.00	CO CAP	
18	0.288.7101.00	CO BLANK WASHER	
19	0.252.7525.00	CO SHIM 45.3X2.5	
20	0.285.7510.00	CO SHIM 40.3 X 61.7 X 1	
21	U0.125.1303.00	CO TOP COVER	
22	8.1.1.00501	CO BOLT M8X22 HHB	
23	8.6.5.00203	CO PLUG 1/2" GAS	
24	8.6.5.00006	CO OIL PLUG 3/8	
25	8.2.2.00560	CO CASTLE NUT M36X3	
26	U0.125.5053.00	GEAR PINION Z15 M7.25	
27	8.4.7.01045	CO COTTER PIN B6X70 SLD-SPRTLY	
28	826-486C	COMER U0.125.7003.00 DIPSTICK	

Gearbox (826-721C)

Applies to Models: RC5610

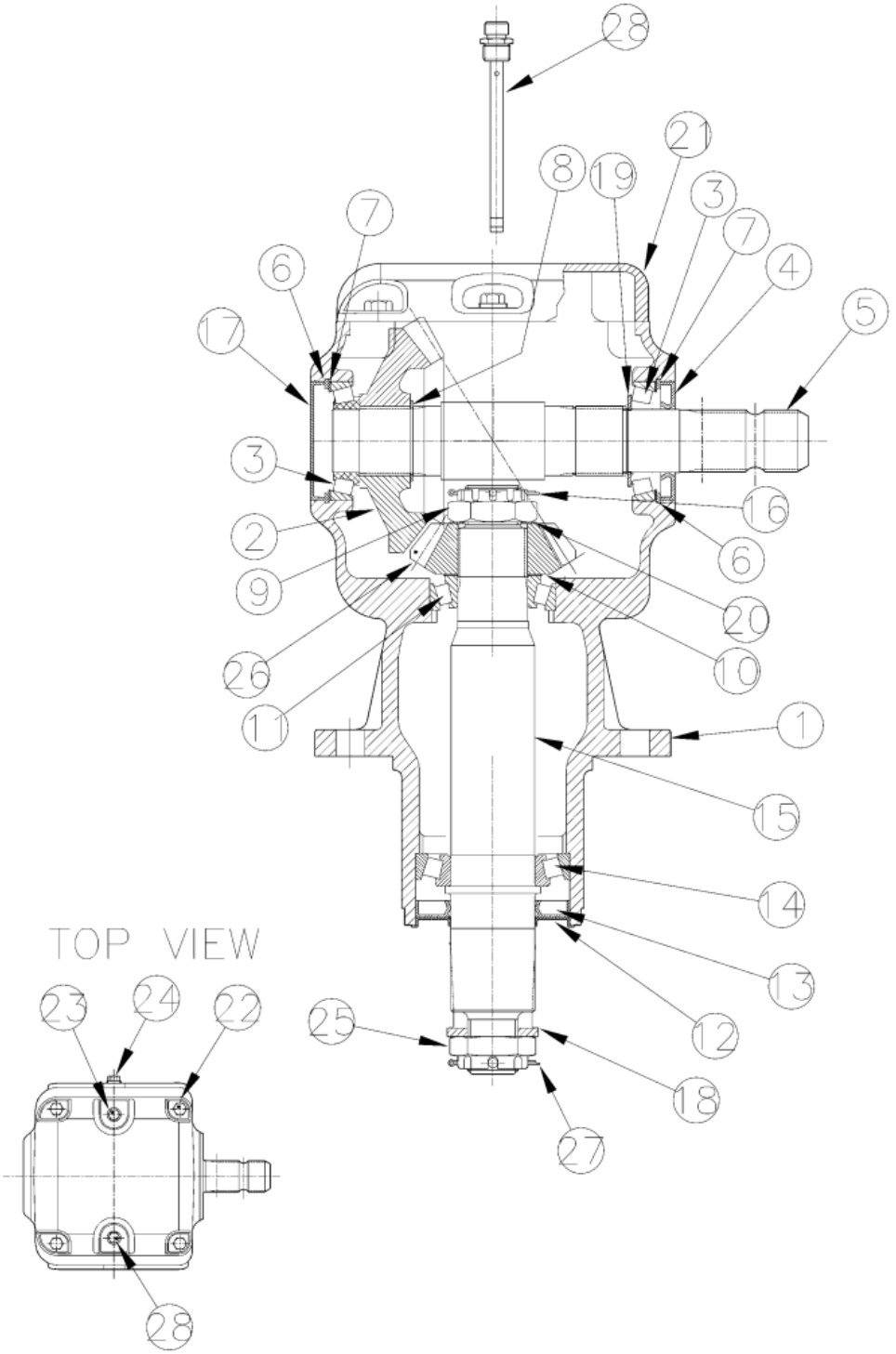

Gearbox (826-721C)

Applies to Models: RC5610

Ref.	Part No.	Part Description	Comments
	DWG 33315	Drawing Image Number	
	826-721C	RPBY 826-927C	Complete assembly
		*	
1	U0.125.0531.00	CO HOUSING	
2	U0.125.6053.00	CO GEAR CROWN Z24 M7.25	
3	8.0.9.00143	CO BRG 30209 TAPPERED	
4	8.7.3.00331	CO OIL SEAL 45 X 85 X 10 SL	
5	U0.125.2050.00	CO INPUT SHAFT 1 3/4"-20	
6	8.5.2.00332	CO SNAP RING UNI 7437	
7	A.709.500	COMER SHIM KIT	
8	8.5.1.00533	CO SNAP RING 50 UNI7435	
9	U0.125.7100.00	CO CASTLE NUT	
10	A.712.500	COMER SHIM KIT	
11	8.0.9.01090	CO BRG 32210 TAPPERED	
12	1.181.7101.00	CO SEAL PROTECTOR	
13	8.7.1.02349	CO OIL SEAL 60X110X12 SL	
14	8.0.9.00079	CO BRG 30212 TAPPERED	
15	U0.125.3002.00	CO OUTPUT SHAFT	
16	8.4.7.02265	CO COTTER PIN B 5X60	
17	0.121.7101.00	CO CAP	
18	0.288.7101.00	CO BLANK WASHER	
19	0.252.7525.00	CO SHIM 45.3X2.5	
20	0.285.7510.00	CO SHIM 40.3 X 61.7 X 1	
21	U0.125.1303.00	CO TOP COVER	
22	8.1.1.00501	CO BOLT M8X22 HHB	
23	8.6.5.00203	CO PLUG 1/2" GAS	
24	8.6.5.00006	CO OIL PLUG 3/8	
25	8.2.2.00560	CO CASTLE NUT M36X3	
26	U0.125.5053.00	GEAR PINION Z15 M7.25	
27	8.4.7.01045	CO COTTER PIN B6X70 SLD-SPRTLY	
28	826-486C	COMER U0.125.7003.00 DIPSTICK	

Gearbox (826-729C)

Applies to Models: RC6610

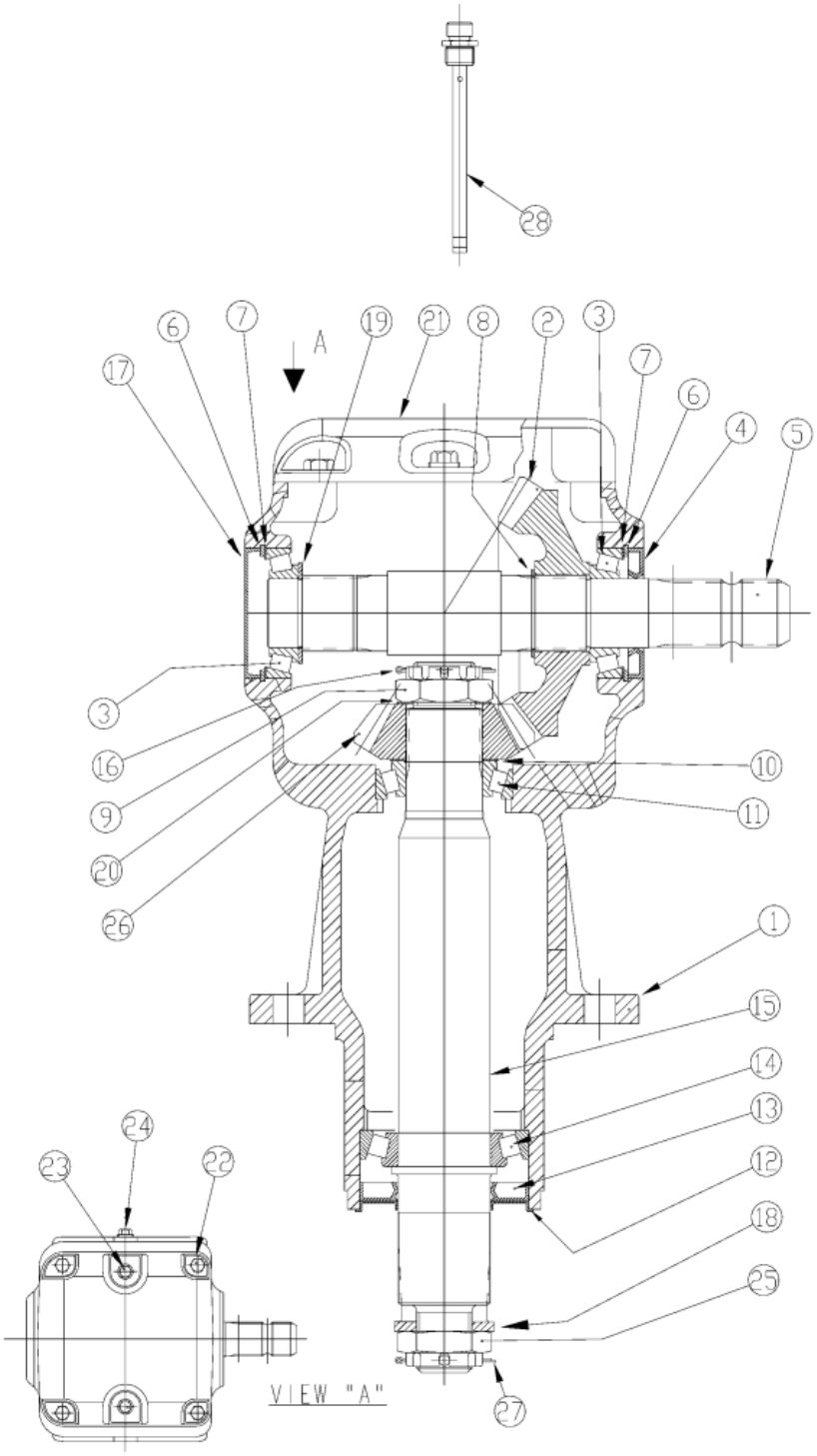

Gearbox (826-729C)

Applies to Models: RC6610

Ref.	Part No.	Part Description	Comments
	DWG33987	Drawing Image Number	
	826-729C	GBOX RC60 1:1.60 STD	
		*	
1	U0.125.0532.00	CO HOUSING	
2	U0.125.6053.00	CO GEAR CROWN Z24 M7.25	
3	8.0.9.00143	CO BRG 30209 TAPPERED	
4	8.7.3.00331	CO OIL SEAL 45 X 85 X 10 SL	
5	U0.125.2050.00	CO INPUT SHAFT 1 3/4"-20	
6	8.5.2.00332	CO SNAP RING UNI 7437	
7	A.709.500	COMER SHIM KIT	
8	8.5.1.00533	CO SNAP RING 50 UNI7435	
9	U0.125.7100.00	CO CASTLE NUT	
10	A.712.500	COMER SHIM KIT	
11	8.0.9.01090	CO BRG 32210 TAPPERED	
12	1.181.7101.00	CO SEAL PROTECTOR	
13	8.7.1.02349	CO OIL SEAL 60X110X12 SL	
14	8.0.9.00079	CO BRG 30212 TAPPERED	
15	U0.125.3003.00	CO OUTPUT SHAFT	
16	8.4.7.02265	CO COTTER PIN B 5X60	
17	0.121.7101.00	CO CAP	
18	0.288.7101.00	CO BLANK WASHER	
19	0.252.7525.00	CO SHIM 45.3X2.5	
20	0.285.7510.00	CO SHIM 40.3 X 61.7 X 1	
21	U0.125.1303.00	CO TOP COVER	
22	8.1.1.00501	CO BOLT M8X22 HHB	
23	8.6.5.00203	CO PLUG 1/2" GAS	
24	8.6.5.00006	CO OIL PLUG 3/8	
25	8.2.2.00560	CO CASTLE NUT M36X3	
26	U0.125.5053.00	CO GEAR PINION Z15 M7.25	
27	8.4.7.01045	CO COTTER PIN B6X70 SLD-SPRTLY	
28	826-486C	COMER U0.125.7003.00 DIPSTICK	

Gearbox (826-730C)

Applies to Models: RC6610

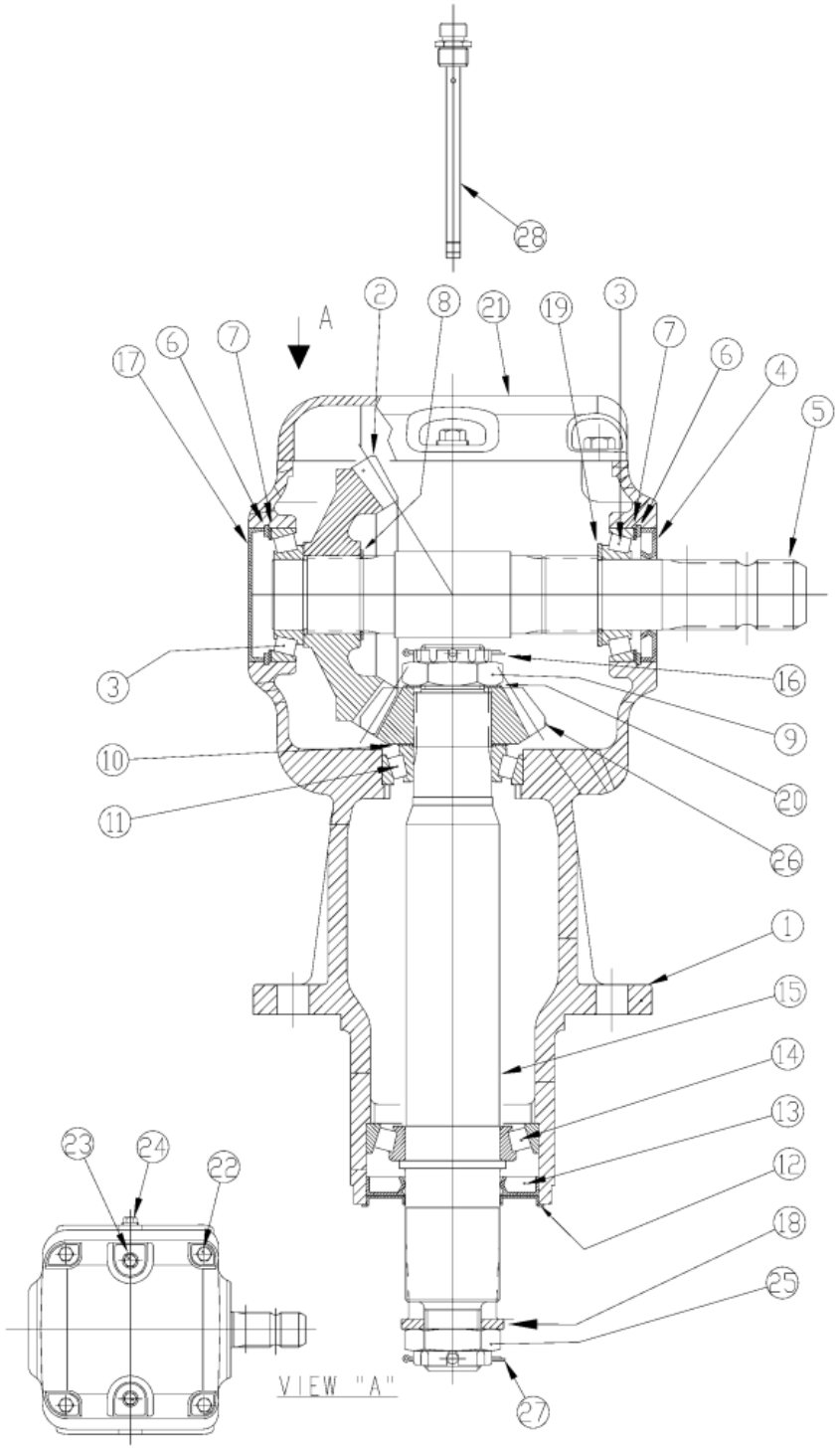

Gearbox (826-730C)

Applies to Models: RC6610

Ref.	Part No.	Part Description	Comments
	DWG33988	Drawing Image Number	
	826-730C	GBOX RC60 1:1.60 REV *	
1	U0.125.0532.00	CO HOUSING	
2	U0.125.6053.00	CO GEAR CROWN Z24 M7.25	
3	8.0.9.00143	CO BRG 30209 TAPPERED	
4	8.7.3.00331	CO OIL SEAL 45 X 85 X 10 SL	
5	U0.125.2050.00	CO INPUT SHAFT 1 3/4"-20	
6	8.5.2.00332	CO SNAP RING UNI 7437	
7	A.709.500	COMER SHIM KIT	
8	8.5.1.00533	CO SNAP RING 50 UNI7435	
9	U0.125.7100.00	CO CASTLE NUT	
10	A.712.500	COMER SHIM KIT	
11	8.0.9.01090	CO BRG 32210 TAPPERED	
12	1.181.7101.00	CO SEAL PROTECTOR	
13	8.7.1.02349	CO OIL SEAL 60X110X12 SL	
14	8.0.9.00079	CO BRG 30212 TAPPERED	
15	U0.125.3003.00	CO OUTPUT SHAFT	
16	8.4.7.02265	CO COTTER PIN B 5X60	
17	0.121.7101.00	CO CAP	
18	0.288.7101.00	CO BLANK WASHER	
19	0.252.7525.00	CO SHIM 45.3X2.5	
20	0.285.7510.00	CO SHIM 40.3 X 61.7 X 1	
21	U0.125.1303.00	CO TOP COVER	
22	8.1.1.00501	CO BOLT M8X22 HHB	
23	8.6.5.00203	CO PLUG 1/2" GAS	
24	8.6.5.00006	CO OIL PLUG 3/8	
25	8.2.2.00560	CO CASTLE NUT M36X3	
26	U0.125.5053.00	CO GEAR PINION Z15 M7.25	
27	8.4.7.01045	CO COTTER PIN B6X70 SLD-SPRTLY	
28	826-486C	COMER U0.125.7003.00 DIPSTICK	

Gearbox (826-925C) Comer

Applies to Models: RC5610

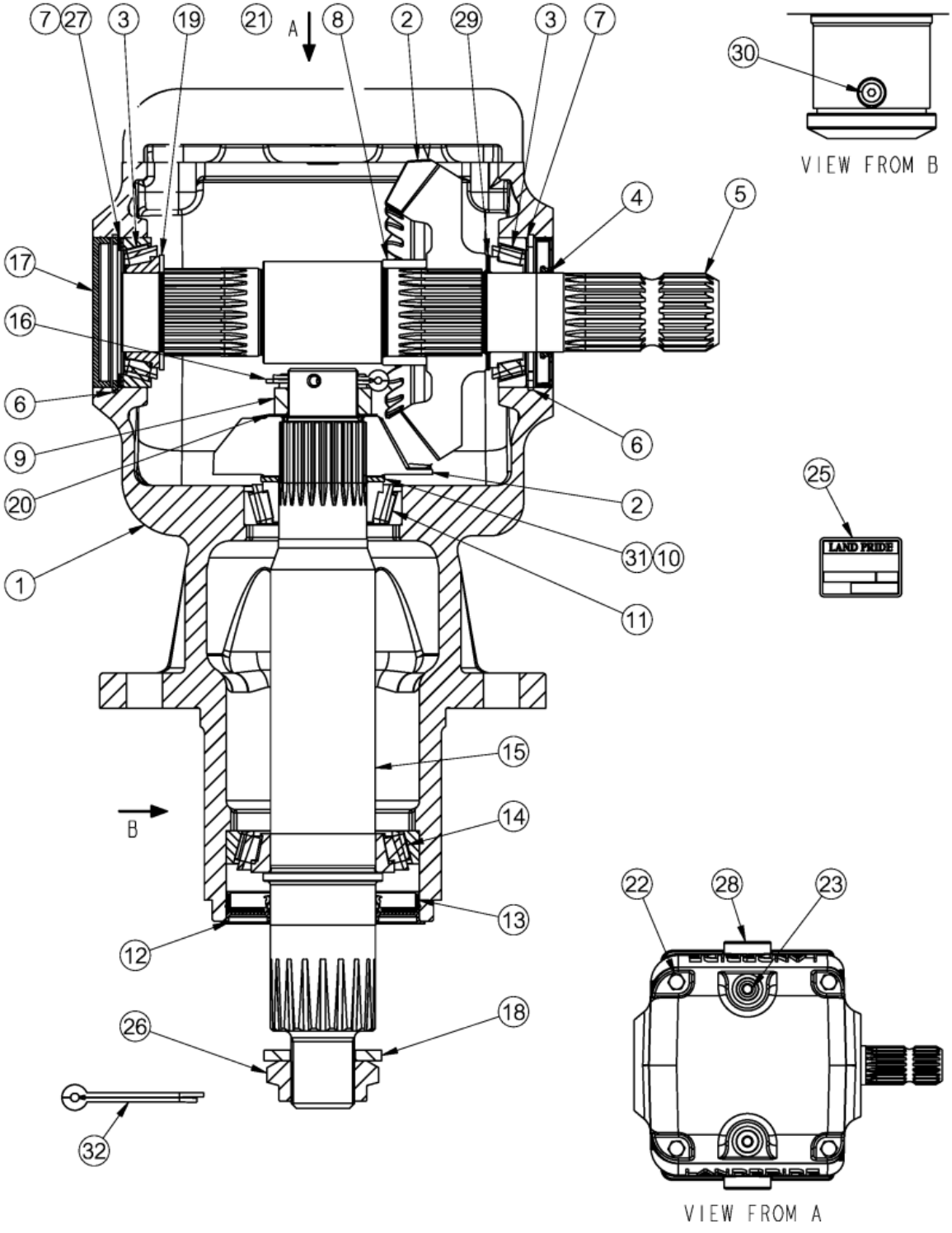

Gearbox (826-925C) Comer

Applies to Models: RC5610

Ref.	Part No.	Part Description	Comments
	DWG 78735	Drawing Image Number	
	826-925C	GBOX RC50 1:1.60 STD *	Complete assembly
1	0.125.0545.00	COMER HOUSING	
2	2.125.5000.00	CO BEVEL GEAR CPLNG 1:1.6 M7.5	Sold as set
3	8.0.9.00143	COMER BEARING 30209 TAPERED	
4	9020.345.010	CO DOUBLE LIP SEAL 45X85X10	
5	0.125.2002.00	CO SHAFT	
6	8.5.2.00332	COMER SNAP RING INT D85 UNI7437	
7	A.709.500	COMER SHIM KIT 70.3X84.7	
7	0.709.7500.00	RPBY A.709.500	
8	0.125.7038.00	CO SPACER 50x60x25	
9	U0.125.7100.00	COMER CASTLE NUT M40X1.5	
10	A.712.500	COMER SHIM KIT 50.3X70.3	
10	0.712.7500.00	RPBY A.712.500 (SHIM KIT)	
11	8.0.9.01090	CO BRG 32210 (50X90X24.75)	
12	1.181.7101.00	CO SEAL PROTECTOR	
13	9020.448.020	CO OIL SEAL NAK NBR 60X110X12	
14	8.0.9.00079	CO BRG 30212 (60X110X23.75)	
15	0.125.3017.00	COMER OUTPUT SHAFT	
16	8.4.7.02265	CO COTTER PIN B 5X60	
17	0.121.7101.00	COMER CAP 85X10	
18	0.288.7101.00	CO BLANK WASHER	
19	0.252.7525.00	COMER SHIM 65.3X45.3X2.5	
20	0.285.7510.00	CO SHIM 40.3 X 61.7 X 1	
21	U0.125.1303.00	CO TOP COVER	
22	8.1.1.00501	COMER HHB M10X22 GR8.8	
23	8.6.6.02901	CO GAS PLUG 1/2"	
24	8.6.4.02647	CO LEV. SIGHT GLASS 3/4"	
25	0.141.7109.00	CO NAME PLATE	
26	8.2.2.00560	CO CASTLE NUT M36X3	
27	0.709.7520.00	CO SHIM 70.3X84.7X2	
28	9510.300.800	CO PLUG 3/4"GAS+O-RING	
29	0.252.7510.00	CO SHIM (45.3X65.3X1)	
30	8.6.6.02856	CO PLUG 3/8" GAS	
31	0.712.7525.00	CO SHIM 50.3X70.3X2.5	
32	8.4.7.01045	CO COTTER PIN B6X70 SLD-SPRTLY	

Gearbox (826-927C) Comer

Applies to Models: RC5610

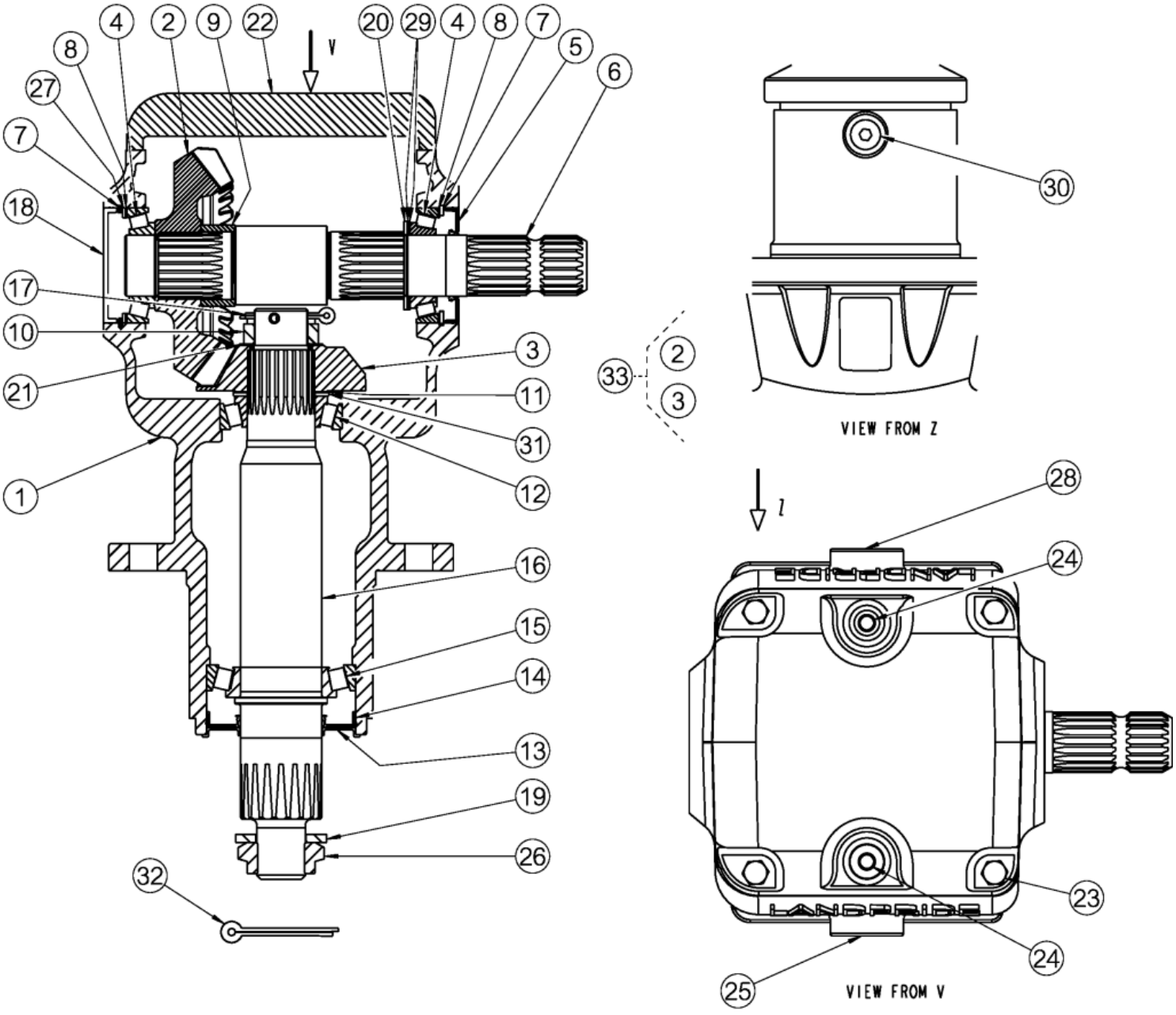

Gearbox (826-927C) Comer

Applies to Models: RC5610

Ref.	Part No.	Part Description	Comments
	DWG 79670	Drawing Image Number	
	826-927C	GBOX RC50 1:1.60 REV *	Complete Assembly
1	0.125.0545.00	COMER HOUSING	
2	0.125.6008.00	CO FORGED BEVEL GEAR M7.5 Z24	
3	0.125.5008.00	CO FORGED BEVEL GEAR M7.5 Z15	
4	8.0.9.00143	COMER BEARING 30209 TAPERED	
5	9020.345.010	CO DOUBLE LIP SEAL 45X85X10	
6	0.125.2002.00	CO SHAFT	
7	8.5.2.00332	COMER SNAP RING INT D85 UNI7437	
8	A.709.500	COMER SHIM KIT 70.3X84.7	
9	0.125.7038.00	CO SPACER 50x60x25	
10	U0.125.7100.00	COMER CASTLE NUT M40X1.5	
11	A.712.500	COMER SHIM KIT 50.3X70.3	
12	8.0.9.01090	CO BRG 32210 (50X90X24.75)	
13	1.181.7101.00	CO SEAL PROTECTOR	
14	9020.448.020	CO OIL SEAL NAK NBR 60X110X12	
15	8.0.9.00079	CO BRG 30212 (60X110X23.75)	
16	0.125.3017.00	COMER OUTPUT SHAFT	
17	8.4.7.02265	CO COTTER PIN B 5X60	
18	0.121.7101.00	COMER CAP 85X10	
19	0.288.7101.00	CO BLANK WASHER	
20	0.252.7525.00	COMER SHIM 65.3X45.3X2.5	
21	0.285.7510.00	CO SHIM 40.3 X 61.7 X 1	
22	U0.125.1303.00	CO TOP COVER	
23	8.1.1.00501	COMER HHB M10X22 GR8.8	
24	8.6.6.02901	CO GAS PLUG 1/2"	
25	8.6.4.02647	CO LEV. SIGHT GLASS 3/4"	
26	8.2.2.00560	CO CASTLE NUT M36X3	
27	0.709.7520.00	CO SHIM 70.3X84.7X2	
28	9510.300.800	CO PLUG 3/4"GAS+O-RING	
29	0.252.7510.00	CO SHIM (45.3X65.3X1)	
30	8.6.6.02856	CO PLUG 3/8" GAS	
31	0.712.7525.00	CO SHIM 50.3X70.3X2.5	
32	8.4.7.01045	CO COTTER PIN B6X70 SLD-SPRTLY	
33	2.125.5000.00	CO BEVEL GEAR CPLNG 1:1.6 M7.5 *	
		Notes: Oil Type 80-90W Capacity 10 Pints	

Gearbox Divider 540 RPM (826-520C) Comer

Applies to Models: RC5610, RC6610

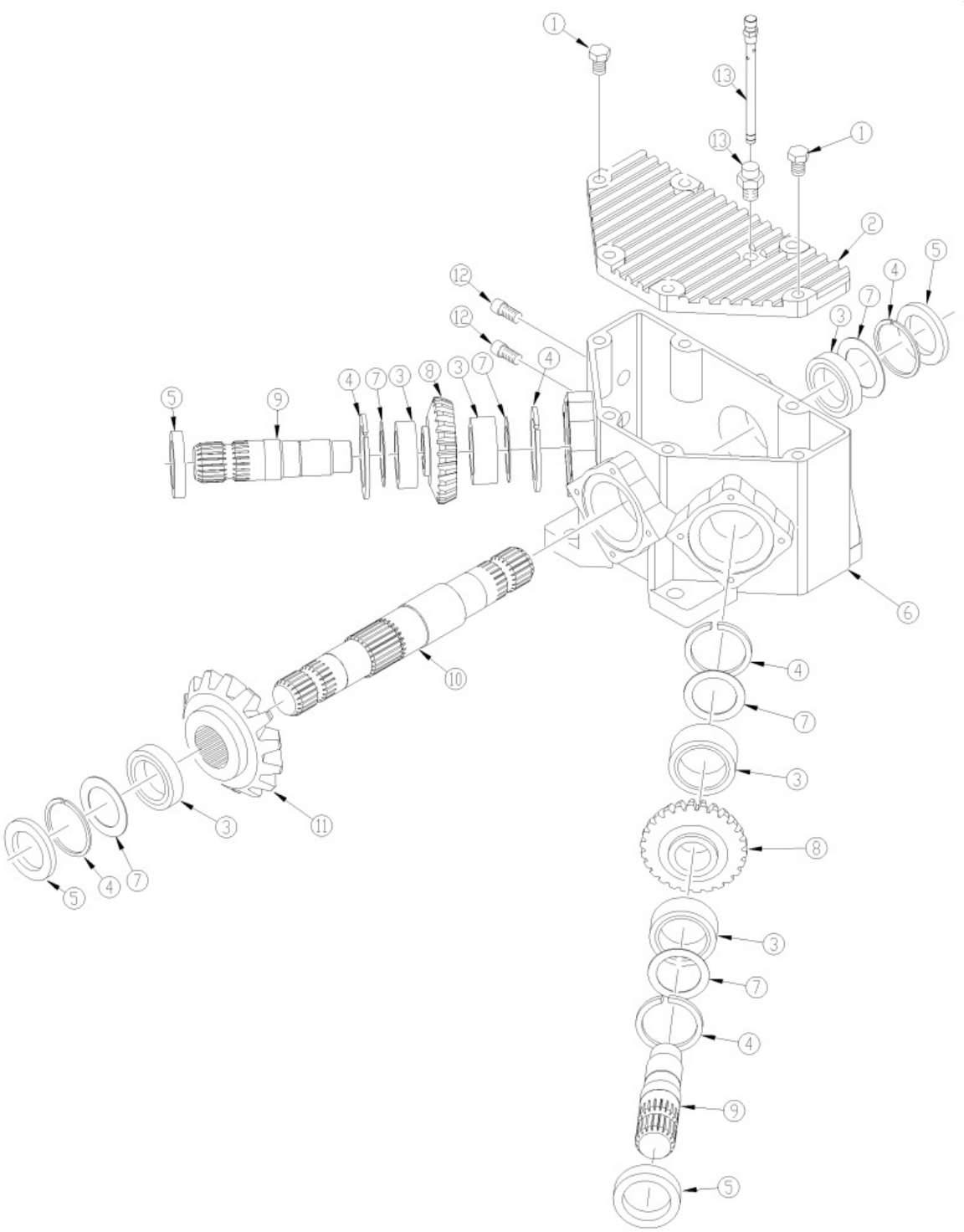

Gearbox Divider 540 RPM (826-520C) Comer

Applies to Models: RC5610, RC6610

Ref.	Part No.	Part Description	Comments
	DWG 26959	Image No.	
	826-520C	DIV BOX COMER 540RPM 1 3/4-20 *	Complete assembly
1	8.1.1.00109	CO BOLT M10 X 35 8.8	
2	0.305.1300.00	TOP COVER PLATE	
3	8.0.9.00143	CO BEARING 30209 RTA25	
4	8.5.2.01772	CO SNAP RING	
5	8.7.3.00331	CO OIL SEAL 45 X 85 X 10	
6	0.305.0300.01	CO CASING	
7	A.709.500	COMER SHIM KIT	
8		RPBY A.305.500	
9	0.305.3000.00	CO SHAFT 1" 3/4 Z20	
10	0.305.2000.00	CO SHAFT 1" 3/4 Z20	
11		RPBY A.305.500	
12	8.6.6.00201	CO PLUG 3/8 GAS	
13	826-848C	COMER 0.340.7101.00 DIPSTICK	
14	A.305.500	CO TRIAD GEAR Z20-Z20-Z24 M6.5 *	Contains 2 of gear #8 and 1 of gear #11
		Notes: Oil Type 80-90W Capacity 5.5 Pints	

Gearbox Divider 540 RPM (826-520C) ITG

Applies to Models: RC5610, RC6610

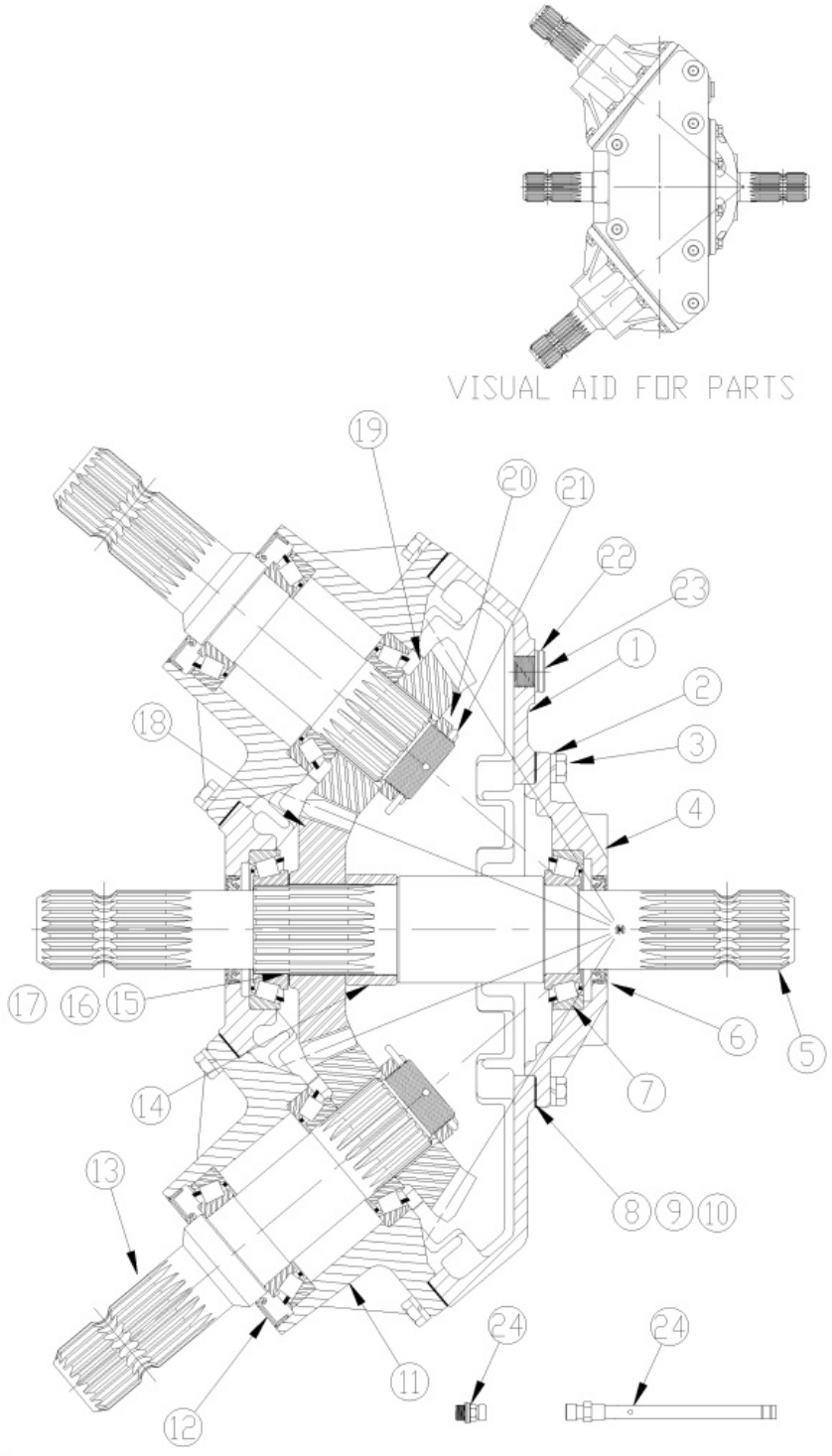

Gearbox Divider 540 RPM (826-520C) ITG

Applies to Models: RC5610, RC6610

Ref.	Part No.	Part Description	Comments
	DWG 25681	Image No.	
	826-520C	DIV BOX 540RPM 1 3/4-20 *	Complete assembly
1	18-059	ITG HOUSING	
2	804-158C	WASHER SPRING LOCK M10 PLT	
3	06-003	ITG M10 X 1.5 X 30 CAP SCREW	
4	20-019	ITG INPUT CAP SPLITTER BOX	
5	02-038	ITG INPUT SHAFT	
6	05-007	ITG INPUT SHAFT OIL SEAL	
7	04-011	ITG BRG ASSEMBLY	
8	08-006	ITG INPUT CAP GASKET 0.10MM	
9	08-007	ITG INPUT CAP GASKET 0.25MM	
10	08-008	ITG IN & OUT CAP GASKET 0.45MM	
11	20-018	ITG HORIZONTAL HUB CAP	
12	05-012B	ITG OUTPUT SEAL 58X95X10 THK	
13	02-039	ITG OUTPUT SHAFT	
14	10-001	ITG SPACER	
15	17-002	ITG SHIM 0.3	
16	17-001	ITG SHIM 0.4	
17	17-003	ITG SHIM 0.5	
18	03-127	ITG 23 TOOTH GEAR	
19	03-126	19 TOOTH GEAR	
20	11-012	ITG BRG ADJ. NUT	
21	12-008	ITG COTTER PIN	
22	07-022	ITG SEALING WASHER	
23	09013	RPBY 802-594C	
24	16-110	ITG M10X1.5 DIP STICK BREATHER *	
		Notes: Oil Type 80-90W Capacity 5.5 Pints	

Hydraulic Components

Applies to Models: RC5610, RC6610, RCM5610, RCM6610

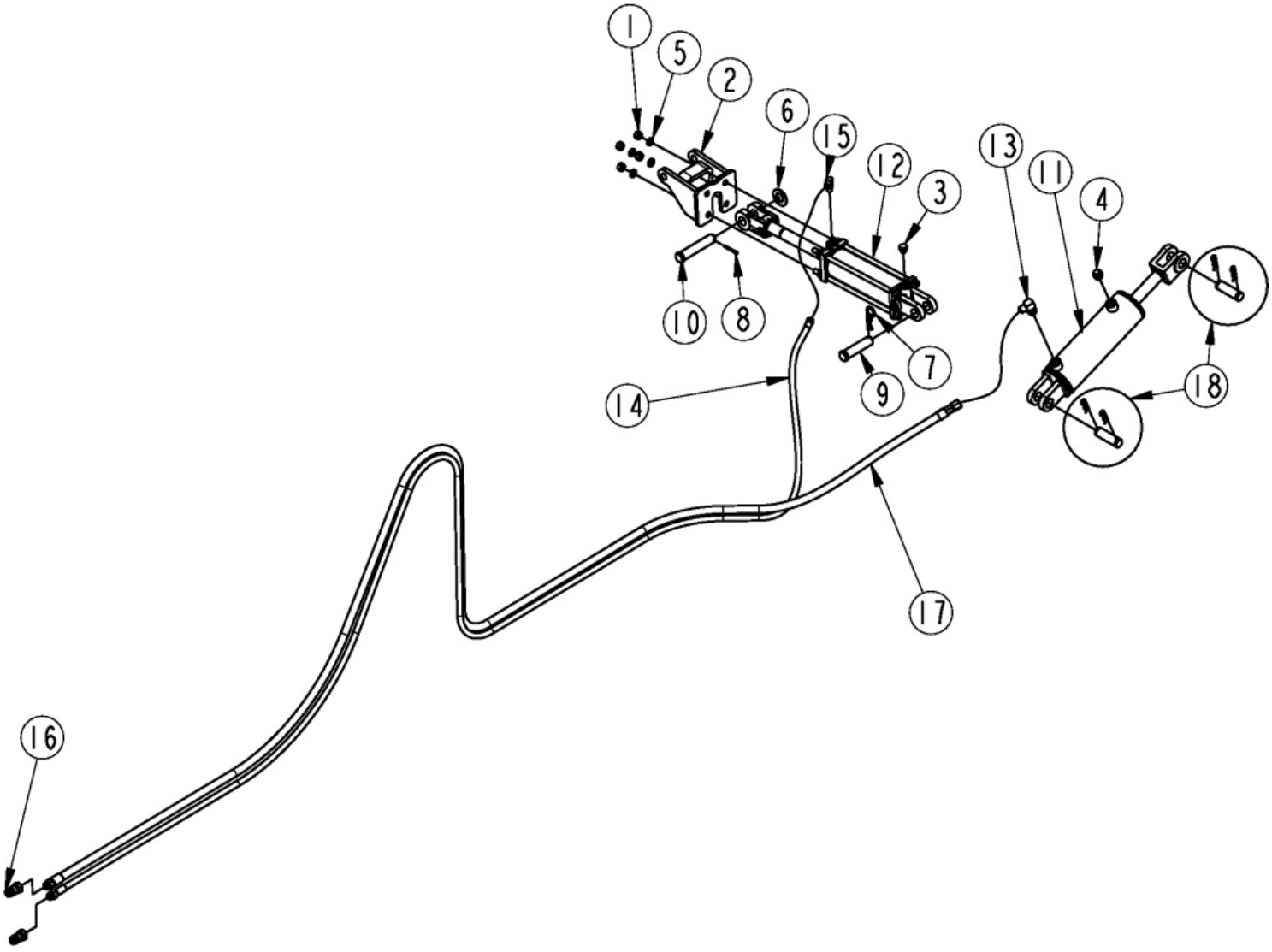

Hydraulic Components

Applies to Models: RC5610, RC6610, RCM5610, RCM6610

Ref.	Part No.	Part Description	Comments
	DWG 39006	Image No.	
1	803-020C	NUT HEX 1/2-13 PLT	
2	330-407H	TRANSPORT LOCK, SGL ACTING	
3	800-117C	VENT PLUG - 9/16-18 PLATED	
4	800-306C	FILL PLUG VENTED 3/4-16 PLT	
5	804-015C	WASHER LOCK SPRING 1/2 PLT	
6	804-029C	WASHER FLAT 1 SAE	
7	805-088C	PIN, HAIR COTTER 3/16 WIRE DIA	
8	805-104C	PIN COTTER 3/16 X 1 1/2 PLT	
9	805-124C	PIN CLVS 1.0X3.69 USBL GR5	
10	805-131C	PIN CLVS 1.0X4.69 USBL	
11	810-162C	CYL 3.5X8X1.25 ROD (TIE ROD)	
12	810-644C	CYL 3X8X1 1/4 ROD (TIE) W/PIN	
13	811-063C	EL 3/4MJIC 3/4MORB	
14	851-167C	HH3/8R1 208 3/4MORB 9/16FJIC	S/N D001073N+
14	811-238C	HH3/8R1 189 9/16FJIC 3/4MORB	S/N D001072N-
15	811-337C	OREL 1/16 9/16MJIC 9/16MORB	
16	811-394C	CP 3/4FORB MALE QD POPPET TYPE	
17	811-786C	HH3/8R1 190 3/4MORB 3/4FJIC	S/N D001073N+
17	811-619C	HH3/8R1 168 3/4MORB 3/4FJIC	S/N D001072N-
18	235005	MON PIN KIT 1.00C/W COTTER PIN	

Hydraulic Cylinder (810-162C) Midway

Applies to Models: RC5610, RC6610, RCM5610, RCM6610

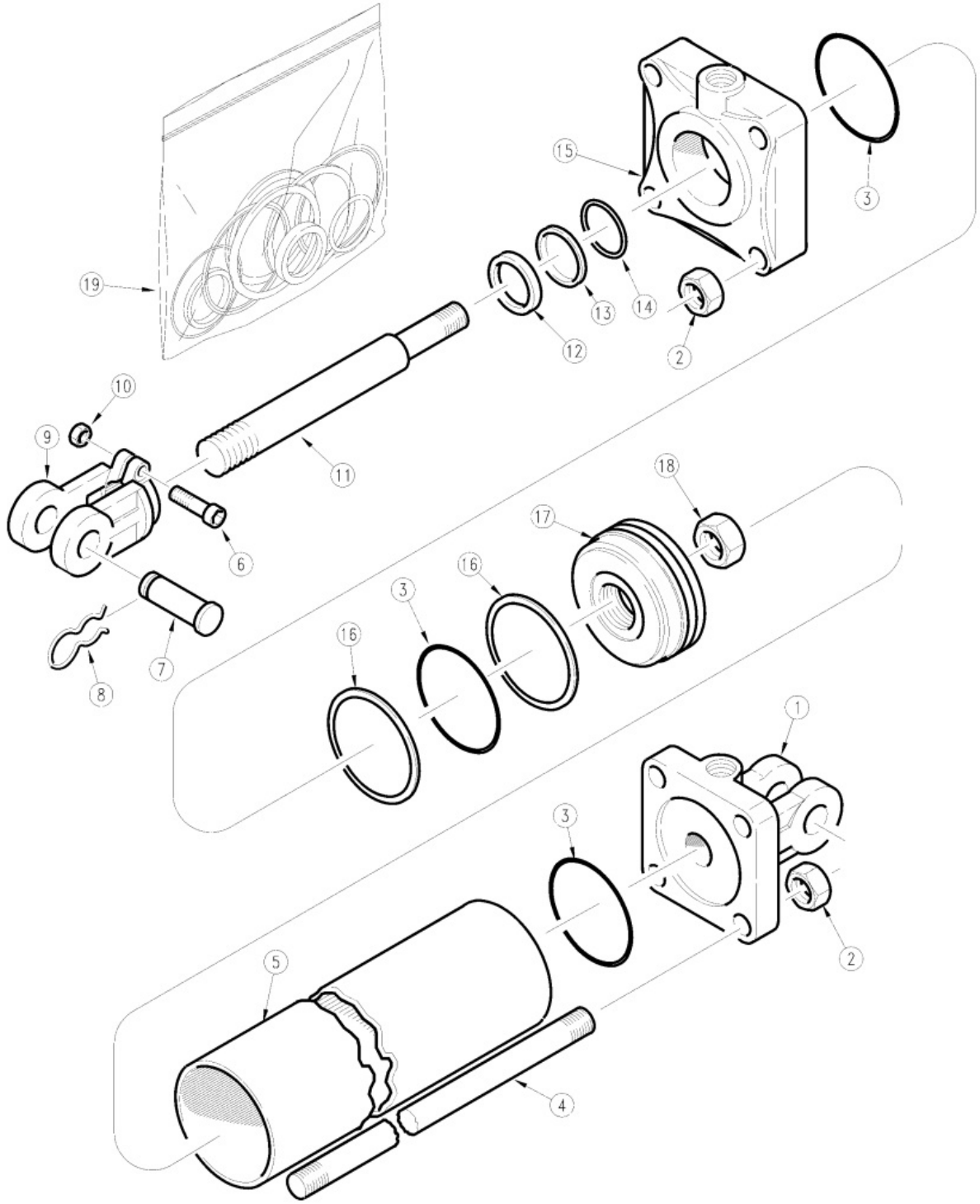

Hydraulic Cylinder (810-162C) Midway

Applies to Models: RC5610, RC6610, RCM5610, RCM6610

Ref.	Part No.	Part Description	Comments
	DWG11421	Drawing Image Number	
	810-162C	CYL 3.5X8X1.25 ROD (TIE ROD) *	
1	6M5142	MW BASE (STD 1 PIN)	
2	2A0016	MW TIE ROD NUT	
3		O-RING	Only available in Seal Kit (#19)
4	7M5316	MW ROD	
5	5M5116	MW TUBE 3 1/2 X 8 CYLINDER	
6	802-023C	HHCS 3/8-16X1 3/4 GR5	
7	805-124C	PIN CLEVIS 1 X 3 11/16 GR5 PLT	
8	2A0132	MW PIN CLIP	
9	1M6010-ADI	MIDWAY HARDENED CLEVIS ADI	
10	803-234C	NUT HEX 3/8-16 PLAIN	
11	2M5416	MW ROD	
12		WIPER	Only available in Seal Kit (#19)
13		BACK-UP ROD	Only available in Seal Kit (#19)
14		O-RING	Only available in Seal Kit (#19)
15	3M5408	MW HEAD	
16		BACK-UP PISTON	Only available in Seal Kit (#19)
17	4M5108	MW PISTON	
18	2A0024	MW PISTON NUT 1-14	
19	810-149C	SEAL KIT 810-104C MW 3A5102	

Hydraulic Cylinder (810-162C) Red Lion

Applies to Models: RC5610, RC6610, RCM5610, RCM6610

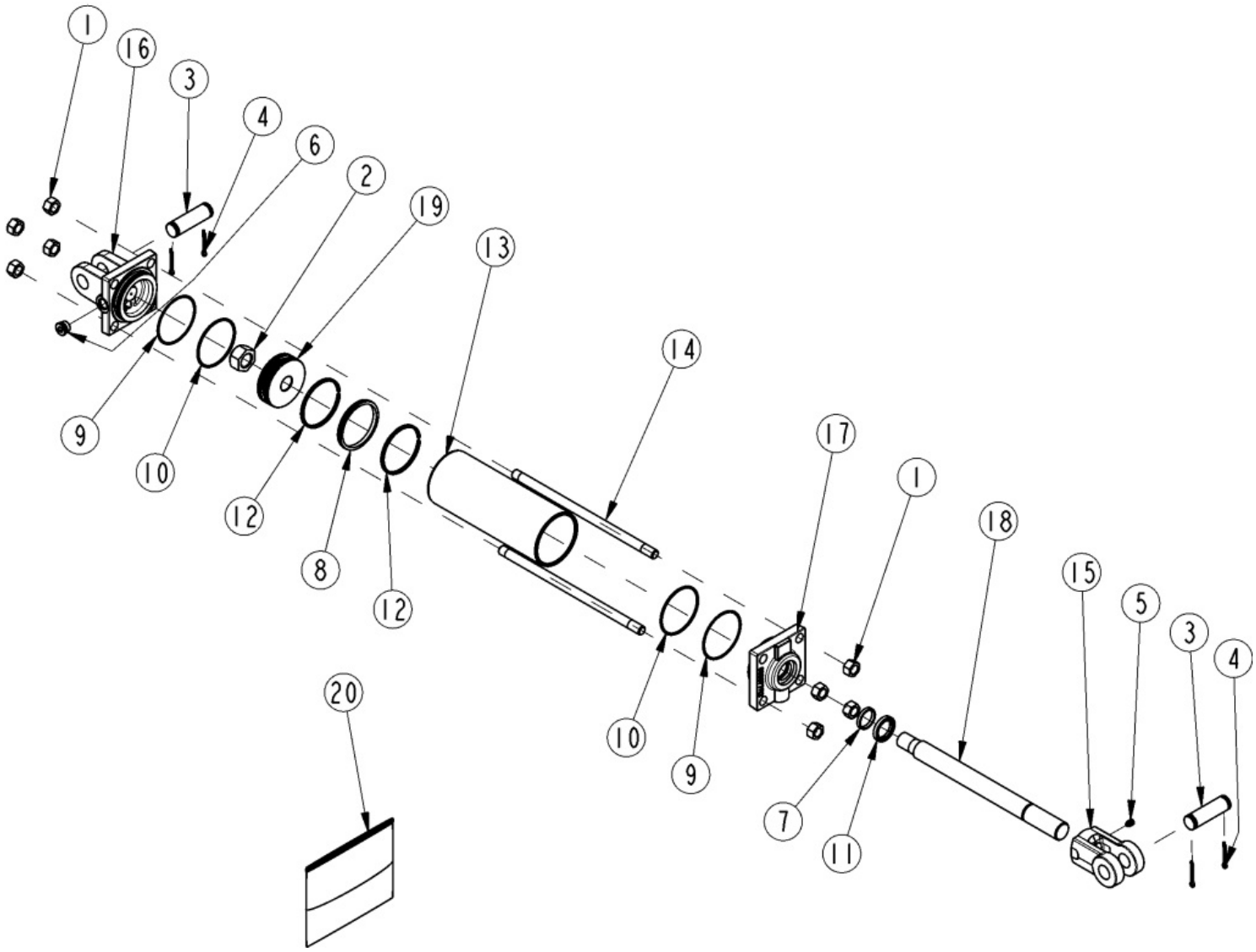

Hydraulic Cylinder (810-162C) Red Lion

Applies to Models: RC5610, RC6610, RCM5610, RCM6610

Ref.	Part No.	Part Description	Comments
	DWG25900	Drawing Image Number	
	810-162C	CYL 3.5X8X1.25 ROD (TIE ROD) *	
1	803-022C	NUT HEX 5/8-18 PLT	
2	130560	MON PISTON NUT	
3	134953	LION PIN	
4	135995	MON CLEVIS PIN COTTER	
5	801-023C	SCREW SET SH 3/8-16X3/8 TYPE C	
6	186562	LION PLUG 3/4-16UNF SOCKET HD	
7		MON ROD SEAL	Only Found in Kit #20
8		MON PISTON SEAL (PSP)	Only Found in Kit #20
9		LION B.U. WASHER 073-236	Only Found in Kit #20
10		MON END CAP O-RING	Only Found in Kit #20
11		SEAL WIPER ROD	Only Found in Kit #20
12		MON PISTON WEAR RING	Only Found in Kit #20
13	491798	LION CYL. TUBE 3.5 X 8	
14	492338	LION TIE ROD 5/8 X 8	
15	492652	LION ROD CLEVIS 1 1/4 (1PIN)	
16	492676	LION CLEVIS CAP 3.5 ORB	
17	494286	MON ROD CAP3.5-1.25-3/4ORB-TSS	
18	492700	LION ROD 1.25 DIA. ASAE 8	
19	258827	MON PISTN 3.50-1.00-TSS-ISO-WR	
20	810-888C	MON SEAL KIT 661703	

Hydraulic Cylinder 3.25 x 6.0 x 1.25 Rod (810-640C)

Applies to Models: RC5610, RC6610, RCM5610, RCM6610

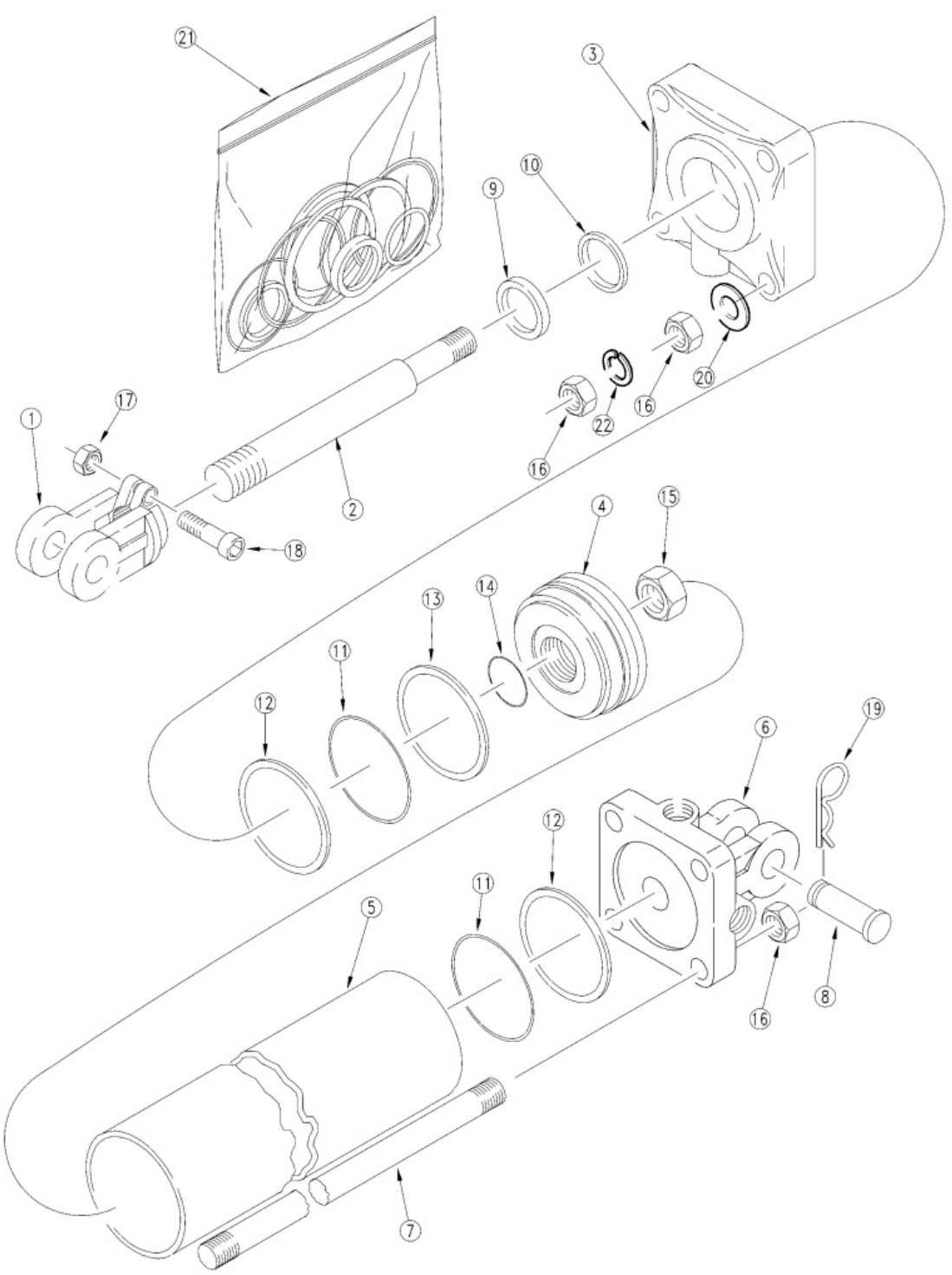

Hydraulic Cylinder 3.25 x 6.0 x 1.25 Rod (810-640C)

Applies to Models: RC5610, RC6610, RCM5610, RCM6610

Ref.	Part No.	Part Description	Comments
	DWG26663	Drawing Image Number	
	810-644C	HYDRAULIC CYLINDER MIDWAY *	
1	1M6010-ADI	MIDWAY HARDENED CLEVIS ADI	
2	2M4416	MW ROD 1-1/4 DIA X 8 STROKE	
3	3R1410	MW HEAD	
4	4M4108	MW PISTON	
5	5M4116	MW TUBE 3 X 8 CYLINDER	
6	6R1146-ADI	MIDWAY ADI BASE	
7	7M4414	TIE ROD	
8	805-124C	PIN CLEVIS 1 X 3 11/16 GR5 PLT	
9		MW WIPER	Only available in item #21
10		U-CUP	Only available in item #21
11		O-RING MIDWAY	Only available in item #21
12		BACK-UP MIDWAY	Only available in item #21
13		CROWN SEAL MIDWAY	Only available in item #21
14		MW PISTON NUT SEAL	Only available in item #21
15	2A0024	MW PISTON NUT 1-14	
16	2A0014	MW TIE ROD NUT	
17	803-234C	NUT HEX 3/8-16 PLAIN	
18	802-023C	HHCS 3/8-16X1 3/4 GR5	
19	805-088C	PIN, HAIR COTTER 3/16 WIRE DIA	
20	804-016C	WASHER FLAT 1/2 SAE PLT	
21	810-015C	CYL SEAL KIT MW (5A4104) 3 X 7	
22	804-015C	WASHER LOCK SPRING 1/2 PLT	

Hydraulic Cylinder 3.5 x 8.0 x 1.25 Rod (810-162C)

Applies to Models: RC5610, RC6610, RCM5610, RCM6610

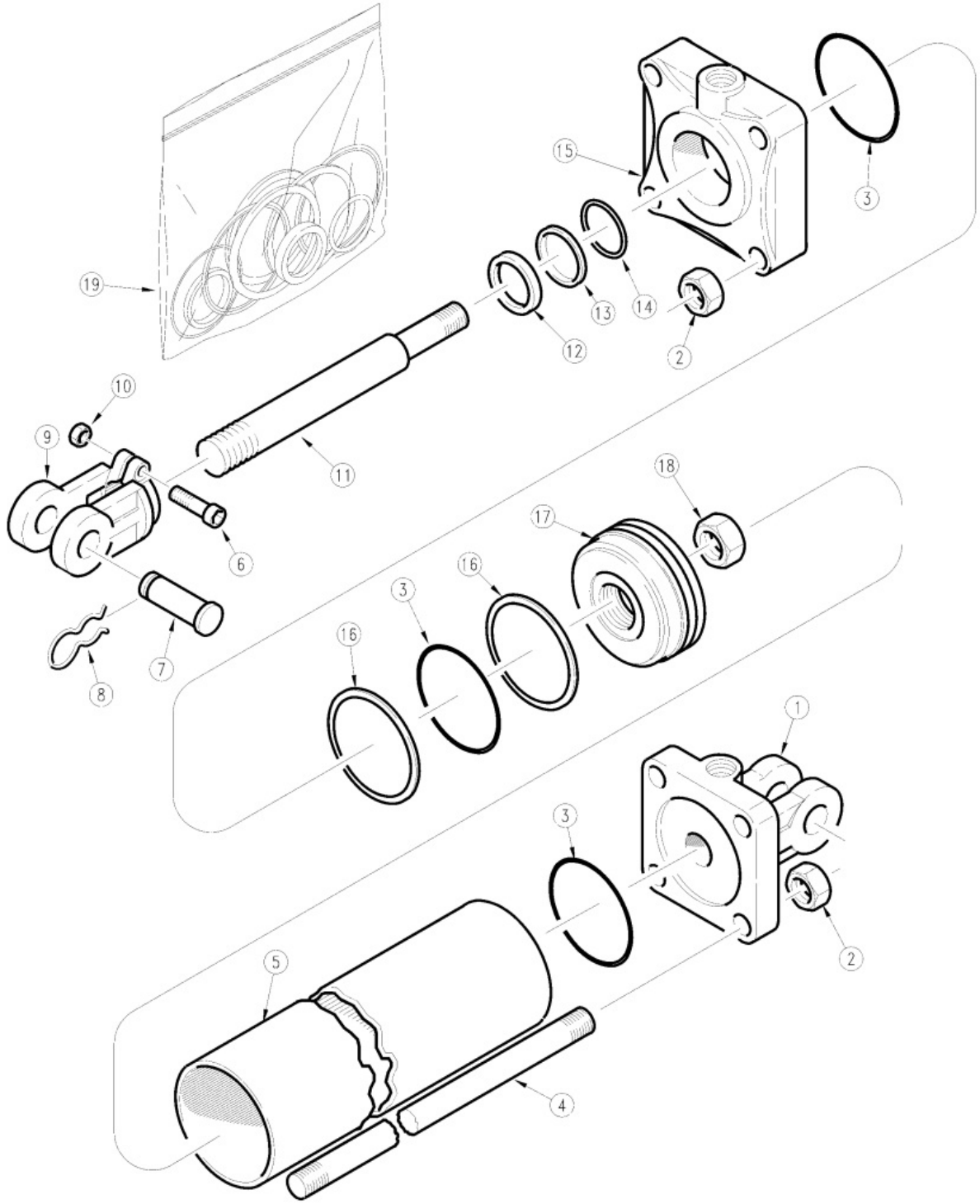

Hydraulic Cylinder 3.5 x 8.0 x 1.25 Rod (810-162C)

Applies to Models: RC5610, RC6610, RCM5610, RCM6610

Ref.	Part No.	Part Description	Comments
	DWG11421	Drawing Image Number	
	810-162C	CYL 3.5X8X1.25 ROD (TIE ROD) *	
1	1D1509-4	BASE CROSS	
2	2A0236-9	TIE ROD NUT CROSS	
3		O-RING	Only available in Seal Kit (#19)
4	2A0581-1325	TIE ROD CROSS	
5	1D0009-1050	TUBE CROSS	
6	802-023C	HHCS 3/8-16X1 3/4 GR5	
7	805-124C	PIN CLEVIS 1 X 3 11/16 GR5 PLT	
8	805-032C	PIN HAIR COTTER .148 WIRE	
9	1D1003-5	CROSS ROD CLEVIS	
10	2A0235-6	CROSS NUT, CLEVIS & TIE ROD	
11	1D0205-1262	ROD CROSS	
12		WIPER	Only available in Seal Kit (#19)
13		BACK-UP ROD	Only available in Seal Kit (#19)
14		O-RING	Only available in Seal Kit (#19)
15	1D1159-4	HEAD CROSS	
16		BACK-UP PISTON	Only available in Seal Kit (#19)
17	1D1401-350	PISTON CROSS	
18	1A1141	PISTON NUT CROSS	
19	810-146C	SEAL KIT CROSS 3.5 CYL 1C4429	

Decals

Applies to Models: RC5610, RC6610, RCM5610, RCM6610

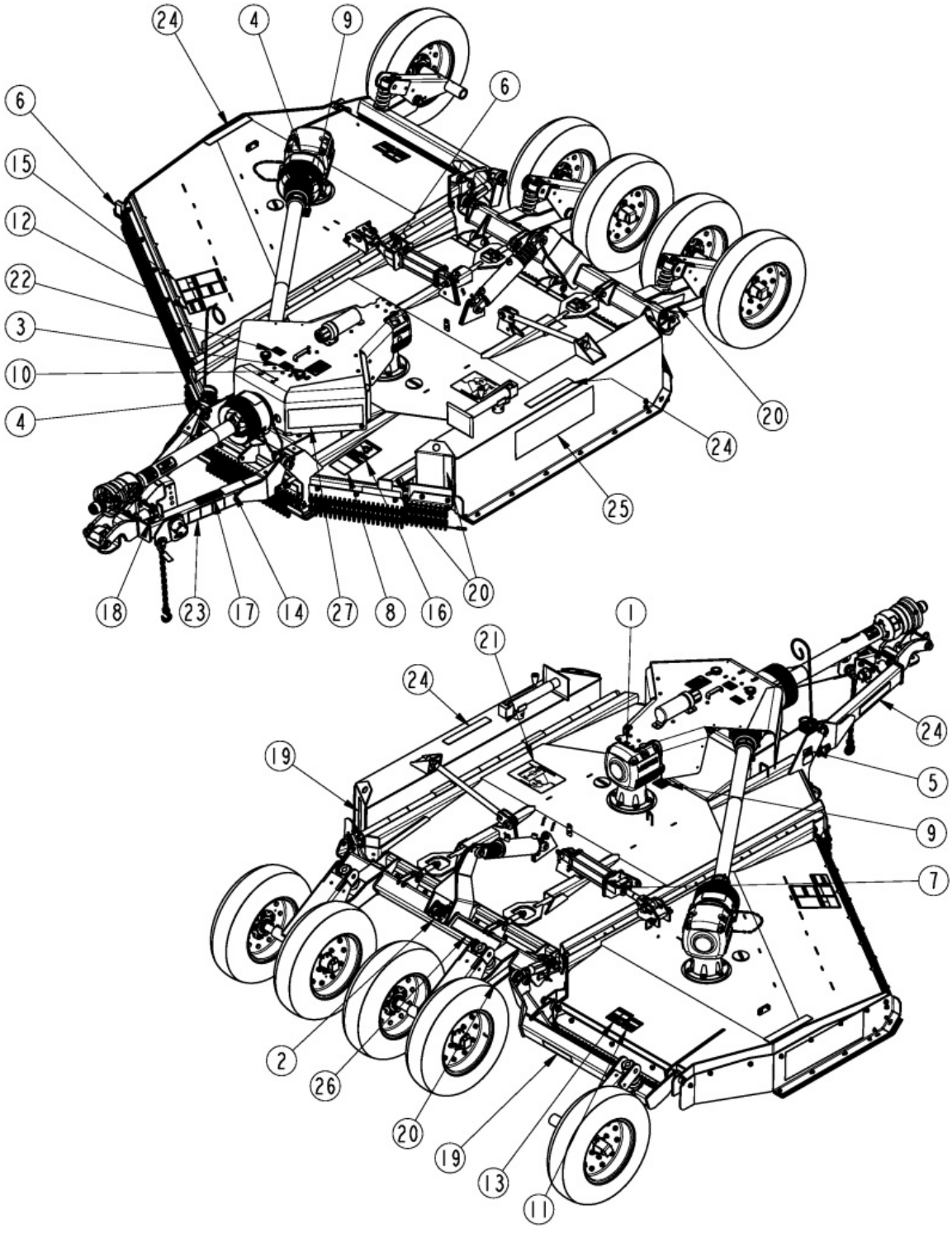

Decals

Applies to Models: RC5610, RC6610, RCM5610, RCM6610

Ref.	Part No.	Part Description	Comments
	DWG 39610	Image No.	
1	818-042C	DECAL PATENT PENDING	
2	818-045C	DECAL WARNING PINCH PT/CRUSH	
3	818-130C	DECAL CAUTION 540 RPM	
4	818-142C	DECAL DANGER PTO DRIVELINE EN	
5	N/A		
6	818-229C	DECAL AMBER REFLECTOR	
7	818-230C	DECAL RED REFLECTOR	
8	818-276C	DECAL WARNING OPERATING ANGLE	
9	818-543C	DECAL DANGER PD GUARD MISS SML	
10	818-552C	DECAL DANGER PTO DRIVELINE	
11	818-556C	DECAL DANGER THROWN OBJ CUTTER	
12	818-561C	DECAL DANGER RAISED WING HAZAR	
13	818-555C	DECAL DANGER ROTATE BLADE	
13	818-564C	RPBY 818-555C	
14	818-714C	DECAL DANGER CRUSHING TWO IMP	
15	818-830C	DECAL SAFETY COMBO SUNWEST	S/N D001212N-
15	858-949C	DECAL CUTTER SAFETY COMBO	S/N D001213N+
16	818-840C	DECAL DANGER ROLLOVER HAZARD	
17	838-094C	DECAL WARNING HYD PRESS LONG	
18	838-588C	FOLDING CUTTER SPEED WARNING	
19	838-614C	DECAL REFLECTOR RED 2X9	
20	838-615C	DECAL REFLECTOR AMBER 2X9	
21	848-843C	DECAL BLADE ROTATION	
22	848-872C	DECAL 7 YEAR GEARBOX WARRANTY	
23	858-381C	DECAL JACK ADJUSTMENT	
24	858-743C	DECAL RC5610 GREAT PLAINS	RC5610
24	858-744C	DECAL RCM5610 GREAT PLAINS	RCM5610
24	858-747C	DECAL RC6610 GREAT PLAINS	RC6610
24	858-748C	DECAL RCM6610 GREAT PLAINS	RCM6610
25	858-767C	DECAL GREATPLAINS 25" CTR LOGO	
26	858-769C	DECAL GREATPLAINS 14" LH LOGO	
27	858-770C	DECAL GREATPLAINS 17" CTR LOGO	

Export Lights Front

Applies to Models: RC5610, RC6610, RCM5610, RCM6610

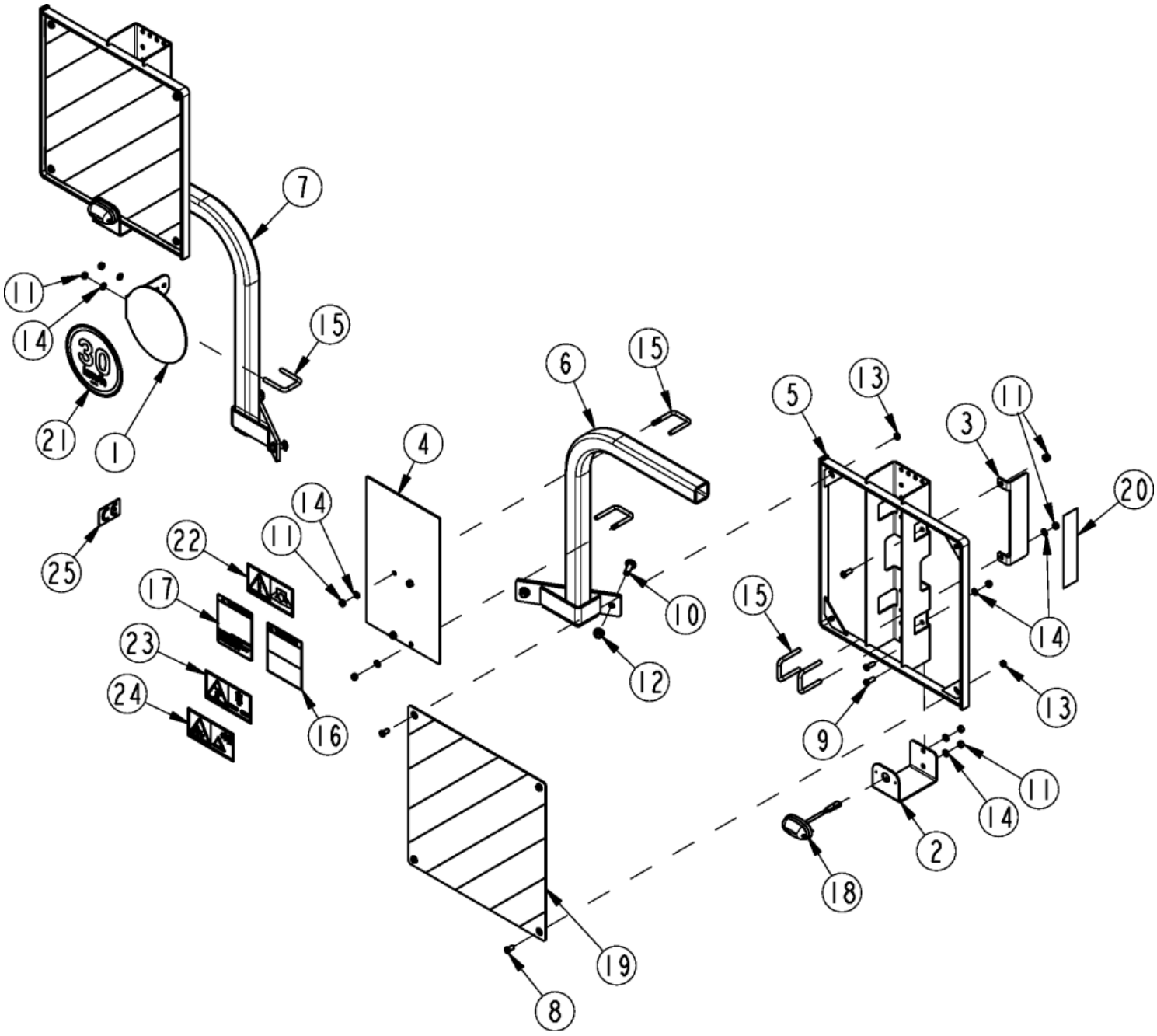

Export Lights Front

Applies to Models: RC5610, RC6610, RCM5610, RCM6610

Ref.	Part No.	Part Description	Comments
	DWG35345	Drawing Image Number	
1	330-618D	LP EU SPEED LIMIT SIGN MNT	
2	330-623D	LP EU FRONT LIGHT BRACKET	
3	330-624D	RC EU SIDE DECAL MNT	
4	330-625D	RC EU FRNT SAFETY PLAQUE	
5	331-004H	LP SIGN MNT WLMT	
6	331-010H	RC EU FRNT LH SIGN MNT	
7	331-012H	RC EU FRNT RH SIGN MNT	
8	802-014C	HHCS 3/8-16X3/4 GR5	
9	802-017C	HHCS 3/8-16X1 GR5	
10	802-331C	RHSNB 1/2-13X1 3/4 GR5	
11	803-014C	NUT HEX 3/8-16 PLT	
12	803-037C	NUT HEX WHIZ 1/2-13 PLT	
13	803-215C	NUT NYLOCK JAM THIN 3/8-16 PLT	
14	804-013C	WASHER LOCK SPRING 3/8 PLT	
15	806-004C	U-BOLT 3/8-16 X 2 X 2 3/4	
16	818-276C	DECAL WARNING OPERATING ANGLE	
17	818-840C	DECAL DANGER ROLLOVER HAZARD	
18	833-389C	3X2 CLEAR OVAL LIGHT	
19	833-398C	FLUORESCENT PANEL SQ RED/WHITE	
20	838-615C	DECAL REFLECTOR AMBER 2X9	
21	848-398C	DECAL 30KM PER HR	
22	848-512C	DECAL PIC READ MANUAL	
23	848-513C	DECAL PIC CRUSHING	
24	848-531C	DECAL PIC FINGER PINCH POINT	
25	858-010C	DECAL CE MARK	

Export Lights Hydraulics

Applies to Models: RC5610, RC6610, RCM5610, RCM6610

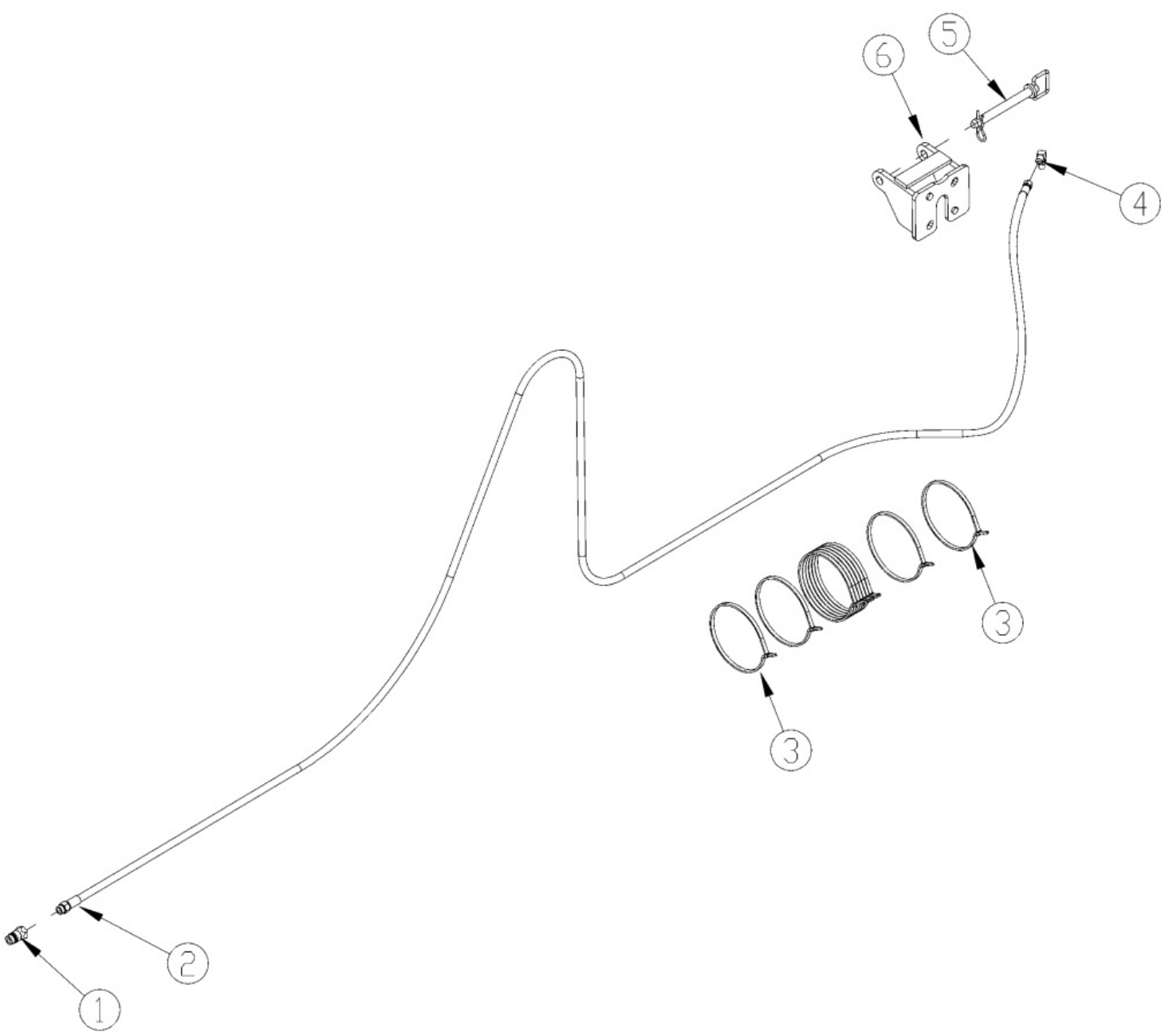

Export Lights Hydraulics

Applies to Models: RC5610, RC6610, RCM5610, RCM6610

Ref.	Part No.	Part Description	Comments
	DWG35349	Drawing Image Number	
1	811-394C	CP 3/4FORB MALE QD POPPET TYPE	
2	811-238C	HH3/8R1 189 9/16FJIC 3/4MORB	
3	800-082C	CABLE TIE .31X21.5 6DIA 120LB	
4	811-337C	OREL 1/16 9/16MJIC 9/16MORB	
5	805-425C	PIN HTCH .75X6.25 USBL W/PIN	
6	330-586H83	TRANS LOCK, DBL ACTING, RED	

Export Lights Rear Standard Axle

Applies to Models: RC5610, RC6610, RCM5610, RCM6610

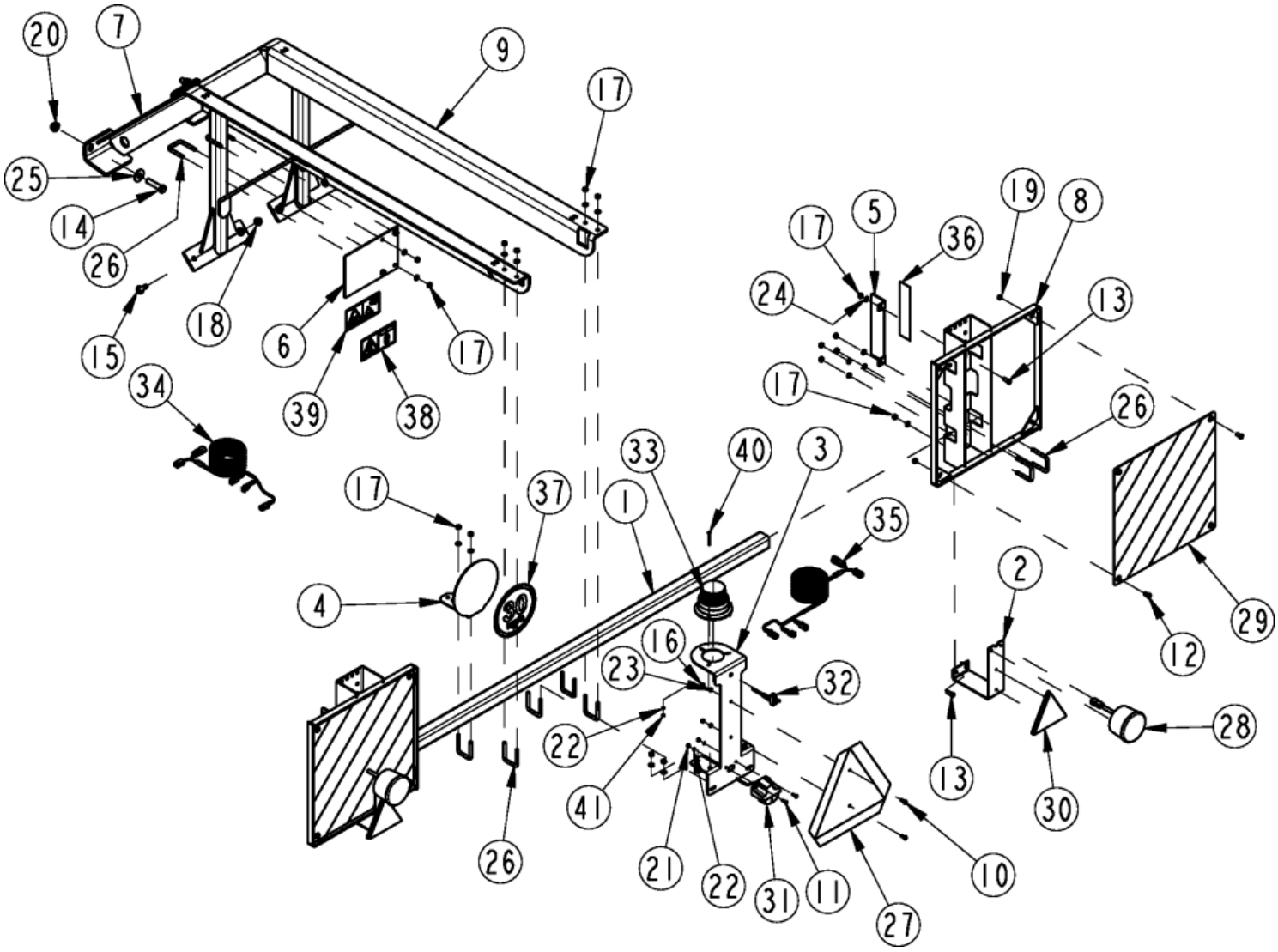

Export Lights Rear Standard Axle

Applies to Models: RC5610, RC6610, RCM5610, RCM6610

Ref.	Part No.	Part Description	Comments
	DWG35346	Drawing Image Number	
1	330-612D	RC EU SIGN MNT BAR	
2	330-616D	LP EU REAR LIGHT BRACKET	
3	330-617D	EU BEACON, SMV, & LICENSE MNT	
4	330-618D	LP EU SPEED LIMIT SIGN MNT	
5	330-624D	RC EU SIDE DECAL MNT	
6	330-626D	RC EU REAR SAFETY PLAQUE	
7	331-003H	RC EU REAR SIGN MNT SHORT	
8	331-004H	LP SIGN MNT WLMT	
9	331-006H	RC EU REAR SIGN MNT SHORT RH	
10	801-005C	SCREW PAN HD 1/4-20 X 3/4	
11	801-021C	SCREW RD HD 10-24 X 3/4 PLT	
12	802-014C	HHCS 3/8-16X3/4 GR5	
13	802-017C	HHCS 3/8-16X1 GR5	
14	802-281C	HHCS 5/8-11X2 3/4 GR5	
15	802-331C	RHSNB 1/2-13X1 3/4 GR5	
16	803-006C	NUT HEX 1/4-20 PLT	
17	803-014C	NUT HEX 3/8-16 PLT	
18	803-037C	NUT HEX WHIZ 1/2-13 PLT	
19	803-215C	NUT NYLOCK JAM THIN 3/8-16 PLT	
20	803-263C	NUT HEX FLANGE LOCK 5/8-11 PLT	
21	803-268C	NUT HEX NYLOCK 10-24 PLT	
22	804-004C	WASHER INTERNAL STAR #10 PLT	
23	804-006C	WASHER LOCK SPRING 1/4 PLT	
24	804-013C	WASHER LOCK SPRING 3/8 PLT	
25	804-019C	WASHER FLAT 5/8 USS PLT	
26	806-004C	U-BOLT 3/8-16 X 2 X 2 3/4	
27	818-055C	DECAL SLOW MOVING-GALV. BACKED	
28	833-388C	LH 4 1/2 ROUND LIGHT RED/AMBER	
29	833-398C	FLUORESCENT PANEL SQ RED/WHITE	
30	833-399C	RED TRIANGLE REFLECTOR	
31	833-560C	LICENSE PLATE LIGHT	
32	833-561C	BEACON LIGHT SWITCH	
33	833-563C	BEACON LIGHT AMBER	
34	833-626C	LIGHT HARNESS EU RC	
35	833-627C	BEACON LIGHT HARNESS RC	
36	838-615C	DECAL REFLECTOR AMBER 2X9	
37	848-398C	DECAL 30KM PER HR	
38	848-515C	DECAL PIC OVERHEAD CRUSHING	
39	848-531C	DECAL PIC FINGER PINCH POINT	
40	801-196C	PHMS #10-24X2 SS	
41	803-269C	NUT HEX 10-32 PLT	

Manual Winch Wing Deck

Applies to Models: RC5610, RC6610, RCM5610, RCM6610

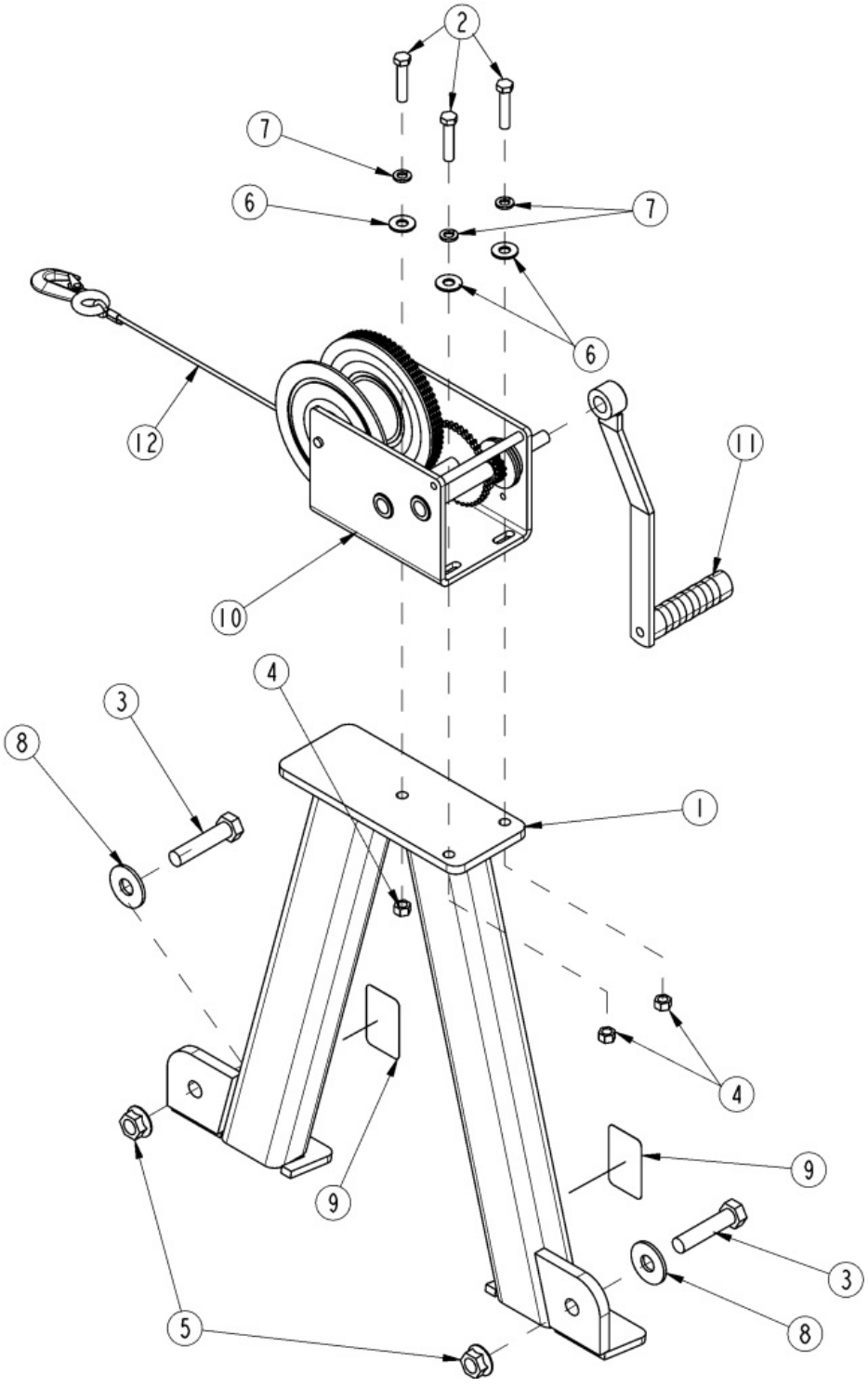

Manual Winch Wing Deck

Applies to Models: RC5610, RC6610, RCM5610, RCM6610

Ref.	Part No.	Part Description	Comments
	DWG26943	Drawing Image Number	
	330-414A	MECHANICAL WINCH RC56 *	Complete assembly
1	330-413H	MECHANICAL WINCH	
2	802-023C	HHCS 3/8-16X1 3/4 GR5	
3	802-281C	HHCS 5/8-11X2 3/4 GR5	
4	803-013C	NUT LOCK 3/8-16 PLT	
5	803-263C	NUT HEX FLANGE LOCK 5/8-11 PLT	
6	804-011C	WASHER FLAT 3/8 USS PLT	
7	804-013C	WASHER LOCK SPRING 3/8 PLT	
8	804-019C	WASHER FLAT 5/8 USS PLT	
9	818-230C	DECAL RED REFLECTOR	
10	890-671C	BRAKE WINCH DLB2000	
11	890-679C	WINCH HANDLE 12" DBL2000	
12	890-680C	WINCH CABLE AND HOOK	

Off Center Lights 3 Inch (LED) Retro-Fit (334-579A)

Applies to Models: RC5610, RC6610, RCM5610, RCM6610

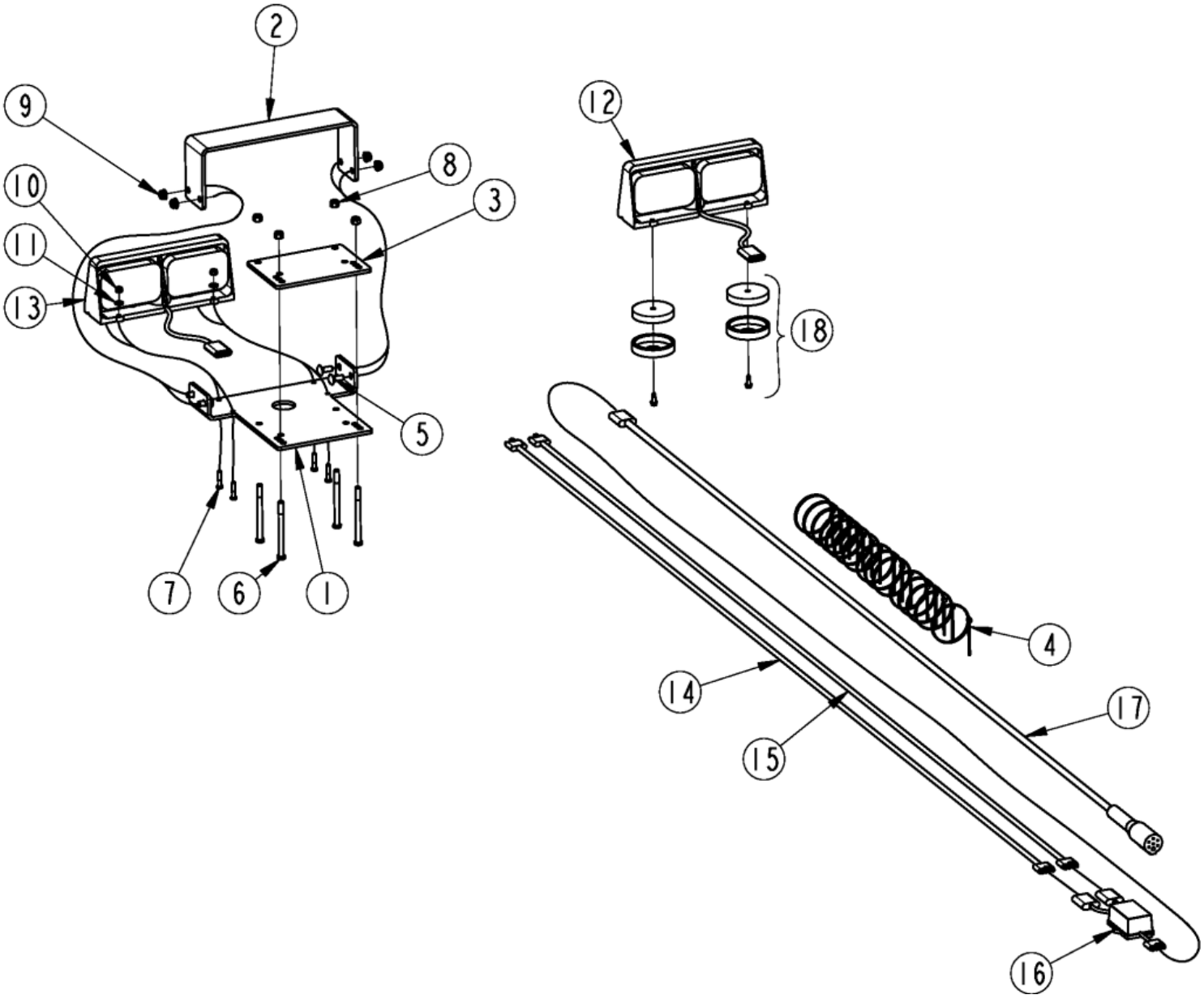

Off Center Lights 3 Inch (LED) Retro-Fit (334-579A)

Applies to Models: RC5610, RC6610, RCM5610, RCM6610

Ref.	Part No.	Part Description	Comments
	DWG 39037	Image No.	
	334-496L	OFFSET CUTTER LIGHT KIT 3"	Complete assembly
	334-574M	ROTARY CUTTER LIGHT KIT MANUAL *	Light kit manual
1	330-965D	LIGHT MNT	
2	330-966D	LIGHT GUARD	
3	330-967D	LIGHT MNT CLAMP	
4	800-060C	CABLE TIE .19X14.25 3DIA 50LB	
5	802-015C	RHSNB 3/8-16X1 GR5	
6	802-318C	HHCS 3/8-16X5 GR5	S/N _____+
6	802-027C	HHCS 3/8-16X4 1/2 GR5	S/N _____-
7	802-224C	HHCS 1/4-20X1 1/4 GR5	
8	803-078C	NUT LOCK 3/8-16 NYLON INSERT	
9	803-209C	NUT FLANGE LOCK 3/8-16 PLT	
10	803-255C	NUT HEX NYLOCK 1/4-20	
11	804-007C	WASHER FLAT 1/4 SAE PLT	
12	891-522C	DUAL LED LIGHT LH	Complete light assembly
12	J-37-R	RED LED LENS MODULE	Red lens
12	J-37-A	AMBER LED LENS MODULE	Amber lens
12	J-AC1-15-B	BLACK LENS COVER	Black lens
13	891-523C	DUAL LED LIGHT RH	Complete light assembly
13	J-37-R	RED LED LENS MODULE	Red lens
13	J-37-A	AMBER LED LENS MODULE	Amber lens
13	J-AC1-15-B	BLACK LENS COVER	Black lens
14	891-529C	RH LIGHT WIRE HARNESS 8'	
15	891-530C	LH LIGHT WIRE HARNESS 8'	
16	891-531C	ENHANCE MODULE	
17	891-532C	LEAD WIRE HARNESS 8'	
18	891-534C	LIGHT MAGNETS WITH HARDWARE	

Tow Lug Bundle

Applies to Models: RC5610, RC6610, RCM5610, RCM6610

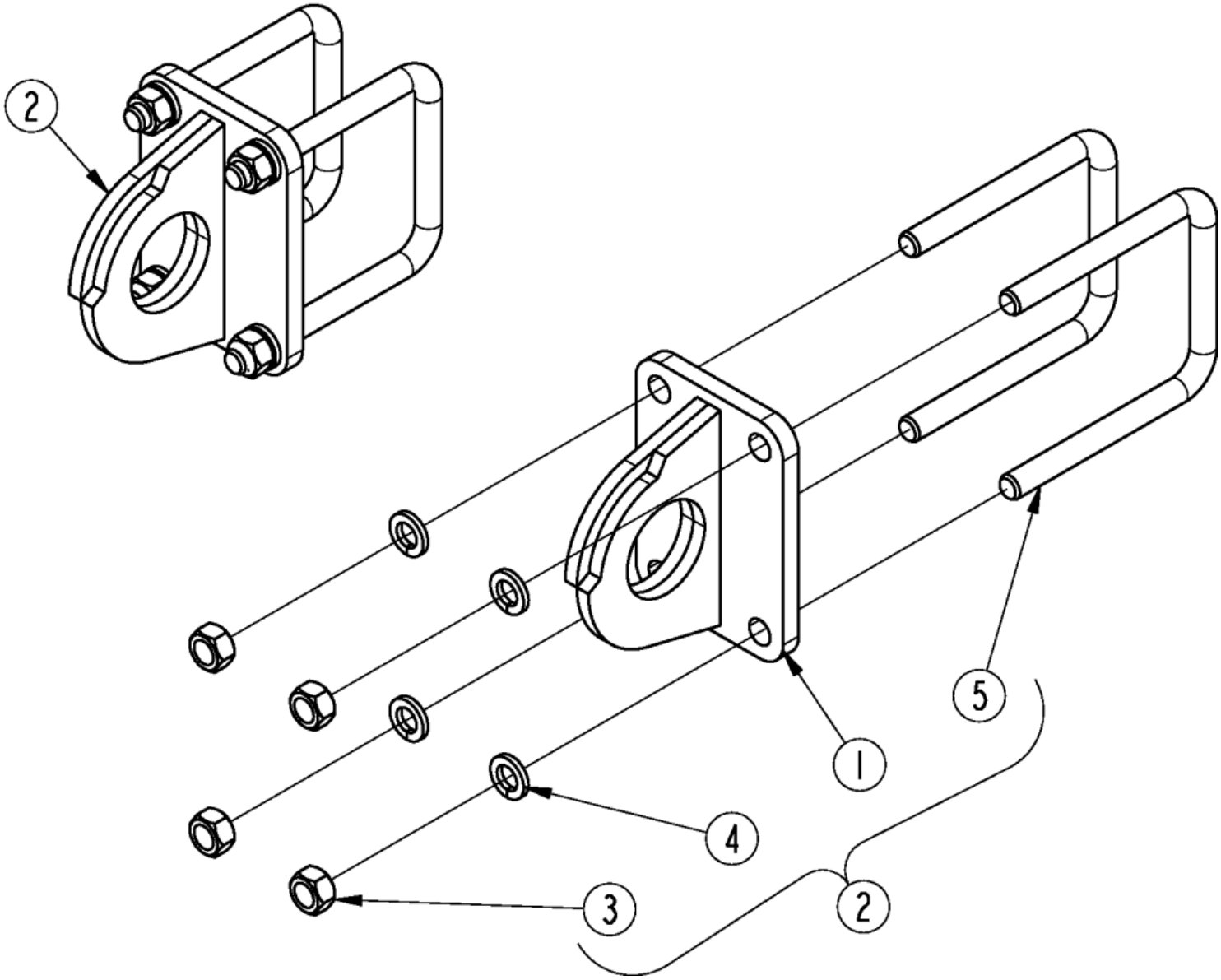

Tow Lug Bundle

Applies to Models: RC5610, RC6610, RCM5610, RCM6610

Ref.	Part No.	Part Description	Comments
	DWG39389	Drawing Image Number	
	331-188A	TOW LUG BUNDLE *	Complete assembly
1	330-415H	TOW LUG	
2	330-416S	TOW LUG ASSY	
3	803-024C	NUT LOCK 5/8-11 PLT	
4	804-022C	WASHER LOCK SPRING 5/8 PLT	
5	806-213C	U-BOLT 5/8-11 X 4 17/32 X 6	

Part Number Index

Part Number	Page
0.121.7101.00	85, 87, 89, 91, 93, 95, 97, 99, 101, 103, 105, 111, 113, 115, 117, 119, 121
0.125.0545.00	93, 95, 97, 119, 121
0.125.2002.00	93, 95, 97, 119, 121
0.125.3017.00	93, 95, 97, 119, 121
0.125.5008.00	121
0.125.5010.00	93, 95
0.125.5012.00	97
0.125.6008.00	121
0.125.6010.00	93, 95
0.125.6012.00	97
0.125.7038.00	93, 95, 97, 119, 121
0.141.7109.00	97, 119
0.252.7510.00	93, 95, 97, 119, 121
0.252.7525.00	85, 87, 89, 91, 93, 95, 97, 99, 101, 103, 105, 111, 113, 115, 117, 119, 121
0.285.7510.00	85, 87, 89, 91, 93, 95, 97, 99, 101, 103, 105, 111, 113, 115, 117, 119, 121
0.288.7101.00	85, 87, 89, 91, 93, 95, 97, 99, 101, 103, 105, 111, 113, 115, 117, 119, 121
0.305.0300.01	107, 123
0.305.1300.00	107, 123
0.305.2000.00	107, 123
0.305.3000.00	107, 123
0.709.7500.00	85, 99, 103, 105, 107, 119
0.709.7520.00	93, 95, 97, 119, 121
0.712.7500.00	85, 99, 103, 105, 119
0.712.7525.00	93, 95, 97, 119, 121
02-038	109, 125
02-039	109, 125
03-126	109, 125
03-127	109, 125
03-15316	71, 73, 75, 77
03-15570	71, 73, 75, 77
04-011	109, 125
05-007	109, 125
05-012B	109, 125
06-003	109, 125
07-022	109, 125
08-006	109, 125
08-007	109, 125
08-008	109, 125
087276	67, 69, 83
09013	109, 125
097133	67, 69, 83
097140	67, 69, 83
1.181.7101.00	85, 87, 89, 91, 93, 95, 97, 99, 101, 103, 105, 111, 113, 115, 117, 119, 121
10-001	109, 125
107542	83
11-012	109, 125
11-14988	71, 75, 77
11-15180	71, 75, 77
12-008	109, 125
123.386.190.01	81
123.486.343.01	81
125140	83
125142	83
130560	131
13-10021	73
13-10022	73
134953	131
135995	131
141.026.357.1	65, 79
141.028.195.1	81
142.260.5197621	79
142.283.2509821	81
142.286.2519821	81
142.287.2199821	81
146.264.024.1	65, 79
146.284.020.1	81
150.281.5197810	81
151.016.037.1	65, 79
151.016.896.1	65
151.018.016.1	81
151.018.228.1	65, 79, 81
151.018.241.1	81
151.018.242.1	81
155.150.724	65
159.280.168	81
16-110	109, 125
165.000.548	65, 79, 81
165.000.589	65, 79, 81
170.016.630.1	65
17-001	109, 125
17-002	109, 125
17-003	109, 125
180.014.022	65, 79, 81
180.014.240	81
180.016.780	65, 79
180.018.251	81
180.018.252	81
180.018.393	81
180.018.435	81
180.018.581	81
180.019.014	65, 79, 81
180.019.018	65, 79, 81
180.019.019	65, 79, 81
180.019.115	65, 79, 81
180.019.116.1	65, 79, 81
18-059	109, 125
186562	131
190.000.016	65
190.000.032	65
190.000.035	81
190.000.047	65, 81

Part Number	Page
190.000.098	79, 81
190.000.099	79, 81
190.000.243	81
190.000.271	81
190.000.903	79
190.000.932	81
190224	83
19-15135	71, 73, 75, 77
1A1141	135
1D0009-1050	135
1D0205-1262	135
1D1003-5	135
1D1159-4	135
1D1401-350	135
1D1509-4	135
1M6010-ADI	129, 133
2.125.5000.00	119, 121
2.125.5002.00	93, 95
2.125.5004.00	97
200-001D	45
20-018	109, 125
20-019	109, 125
235005	127
258827	131
26-13387	75
26-15120	71, 73, 77
26-16033	71, 73, 75, 77
2A0014	133
2A0016	129
2A0024	129, 133
2A0132	129
2A0235-6	135
2A0236-9	135
2A0581-1325	135
2M4416	133
2M5416	129
304011	67, 69
304046	67, 69, 83
312209	67, 69
318-000D	63
318-005H	27
318-006H	25, 27
318-053L	25, 27
318-107D	49, 53, 57
318-108D	51, 55, 59
318-129D	63
318-190D	7
318-337D	49, 53, 57
318-358H	21
318-478D	51, 55, 59
318-556H	25
318-586A	5, 7
318-606D	53
318-617D	49, 53, 57
318-620K	53
318-636D	49, 57
318-657D	61
318-695L	35
318-696H	13, 35
318-707K	49
318-728K	61
318-756D	35
318-757D	35
318-766H	7
318-834H	21
318-917D	61
318-918D	61
318-920S	11
318-923D	35
318-924D	63
318-925D	63
318-927D	13
318-929D	55
318-930D	51, 59
318-931D	53
318-932D	49, 57
318-952D	63
318-965D	53
318-966D	49, 57
321256	69
323524	83
325027	67, 69, 83
326-099D	49, 53, 57
326-152D	35
326-224D	35
326-535D	51, 55, 59
330-050D	55
330-051D	51, 59
330-155K	57
330-177H	37
330-181H	43
330-185H	9
330-186H81	9
330-187H81	13
330-189H81	9
330-190H81	13
330-195H	29
330-196L	29
330-223H	25, 27
330-224K	29
330-225A	27
330-234K	55
330-235K	51
330-236K	59
330-237K	53
330-238K	49
330-239K	57
330-271H	21, 23
330-273K	53
330-274K	49
330-275K	57
330-316K	61
330-317K	61
330-318K	63
330-319K	63
330-320K	63
330-328D	35
330-331D	37, 39, 41, 43
330-333A	21
330-334A	25
330-335A	19
330-348H	19
330-406H	35
330-407H	127
330-410H	35
330-413H	145
330-414A	145
330-415H	149
330-416S	149
330-449K	55
330-450K	51
330-451K	59
330-512A	53
330-513A	61
330-514A	49
330-515A	57
330-524A	55
330-525A	63
330-526A	51
330-527A	59
330-563D	21
330-564D	21
330-586H83	141
330-597D	51, 55, 59

Part Number	Page
330-607H	37
330-608H	43
330-609S	37
330-610S	43
330-612D	143
330-615S	39
330-616D	143
330-616H	39
330-617D	143
330-618D	139, 143
330-623D	139
330-624D	139, 143
330-625D	139
330-626D	143
330-835D	13
330-919K	35
330-920K	35
330-938K	37, 39, 41, 43, 45
330-965D	31, 147
330-966D	31, 147
330-967D	31, 147
330-970H	5
330-974K	21
330-975H	21
331-003H	143
331-004H	139, 143
331-006H	143
331-010H	139
331-012H	139
331-076D	33
331-087D	17
331-088D	17
331-089D	17
331-099H	37
331-120H	13
331-121D	11
331-188A	149
331-202H	39, 41
331-207H81	13
331-528H	39
331-543D	23
331-552V	33
331-553H	11
331-554H	11, 33
331-555S	33
331-557H	11
331-561H	17
331-579H	17
331-580H	11
331-581H	11
331-682A	31
331-709H	41
331-757H	41
331-794H	43
331-795L	43
333645	67
334-045A	23
334-046H	23
334-048H	23
334-293K81	13
334-448H	37
334-449S	37
334-464H	43
334-465H	39, 41
334-466S	43
334-467S	39
334-496L	31, 147
334-574M	147
334-724H	41
339107	69
355155	67, 69
359474	67, 69, 83
362428	69
362430	67
364915	67
365305	67, 69, 83
371708	83
371709	83
377437	67, 69
377442	69
380371	67, 69, 83
387768	67
388957	69
389850	69
390257	69
39-10039	73
391409	67
391410	67
395980	83
396295	83
397493	83
399469	83
3M5408	129
3R1410	133
491798	131
492338	131
492652	131
492676	131
492700	131
494286	131
4M4108	133
4M5108	129
55051-1817	71, 75, 77
5M4116	133
5M5116	129
68810-1003	71, 73
68810-1004	77
68810-1005	75
6M5142	129
6R1146-ADI	133
702352	67, 69
7M4414	133
7M5316	129
8.0.9.00079	85, 87, 89, 91, 93, 97, 99, 101, 103, 105, 111, 113, 115, 117, 119, 121
8.0.9.00143	85, 87, 89, 91, 93, 95, 97, 99, 101, 103, 105, 107, 111, 113, 115, 117, 119, 121, 123
8.0.9.0079	95
8.0.9.01090	85, 87, 89, 91, 93, 95, 97, 99, 101, 103, 105, 111, 113, 115, 117, 119, 121
8.1.1.00109	107, 123
8.1.1.00501	85, 87, 89, 91, 93, 95, 97, 99, 101, 103, 105, 111, 113, 115, 117, 119, 121
8.2.2.00560	85, 87, 89, 91, 93, 95, 97, 99, 101, 103, 105, 111, 113, 115, 117, 119, 121

Part Number	Page
8.4.7.01045	85, 87, 89, 91, 93, 95, 97, 99, 101, 103, 105, 111, 113, 115, 117, 119, 121
8.4.7.02265	85, 87, 89, 91, 93, 95, 97, 99, 101, 103, 105, 111, 113, 115, 117, 119, 121
8.5.1.00533	85, 87, 89, 91, 99, 101, 103, 105, 111, 113, 115, 117
8.5.2.00332	85, 87, 89, 91, 93, 95, 97, 99, 101, 103, 105, 111, 113, 115, 117, 119, 121
8.5.2.01772	107, 123
8.6.4.02647	93, 95, 97, 119, 121
8.6.5.00006	85, 87, 89, 91, 99, 101, 103, 105, 111, 113, 115, 117
8.6.5.00203	87, 89, 91, 111, 113, 115, 117
8.6.6.00201	107, 123
8.6.6.02856	93, 95, 97, 119, 121
8.6.6.02901	93, 95, 97, 119, 121
8.7.1.02349	85, 87, 89, 91, 99, 101, 103, 105, 111, 113, 115, 117
8.7.3.00331	85, 87, 89, 91, 99, 101, 103, 105, 107, 111, 113, 115, 117, 123

Part Number	Page
800-001C	13, 17, 21, 23, 29, 37, 39, 41, 43
800-060C	31, 147
800-073C	37, 39, 43
800-080C	45
800-082C	141
800-117C	127
800-306C	127
801-005C	143
801-021C	143
801-023C	131
801-196C	143
801-229C	37, 39, 41, 43
801-248C	33
802-005C	11
802-007C	11
802-014C	139, 143
802-015C	31, 63, 147
802-017C	139, 143
802-022C	13, 35
802-023C	129, 133, 135, 145
802-027C	31, 147
802-053C	11, 19, 21, 23, 25, 27
802-058C	9
802-065C	7, 11, 15
802-070C	21
802-074C	21
802-075C	23
802-079C	23, 55
802-082C	37, 39, 41, 43
802-091C	35
802-096C	17
802-099C	37, 39, 41, 43
802-106C	17, 35
802-138C	11
802-143C	17, 37, 39, 41, 43
802-155C	13, 17
802-205C	21
802-214C	13, 35, 49, 51, 53, 55, 57, 59, 61, 63
802-224C	31, 147

Part Number	Page
802-277C	5, 7
802-281C	143, 145
802-301C	33
802-318C	31, 147
802-331C	139, 143
802-368C	35
802-466C	13, 35
802-538C	29
802-552C	29
802-729C	25
802-754C	29
802-779C	45
802-843C	33
802-877C	25, 27
802-915C	29
802-967C	11
803-006C	143
803-013C	17, 37, 39, 41, 43, 145
803-014C	13, 17, 35, 139, 143
803-019C	37, 39, 41, 43
803-020C	17, 127
803-022C	131
803-024C	149
803-025C	29
803-029C	45
803-030C	29
803-031C	17
803-032C	29, 35
803-037C	13, 35, 49, 51, 53, 55, 57, 59, 61, 63, 139, 143
803-078C	31, 147
803-084C	29
803-168C	17, 21
803-169C	37, 39, 41, 43
803-170C	5, 7
803-181C	7, 21
803-198C	13, 35, 63
803-201C	23
803-209C	31, 55, 147
803-215C	139, 143
803-234C	129, 133
803-255C	11, 31, 33, 147

Part Number	Page
803-258C	21, 23, 25, 27
803-263C	9, 11, 143, 145
803-268C	143
803-269C	143
803-299C	15
803-301C	21, 23
803-304C	19, 21, 23, 25, 27
803-310C	45
803-316C	29, 35, 41
803-381C	37, 39, 41, 43
804-004C	143
804-006C	33, 143
804-007C	11, 31, 147
804-009C	11, 15, 33
804-010C	11, 15, 33
804-011C	17, 55, 145
804-013C	13, 17, 23, 35, 139, 143, 145
804-015C	17, 127, 133
804-016C	11, 37, 39, 41, 43, 133
804-019C	143, 145
804-022C	11, 149
804-025C	21, 25, 27
804-027C	17, 29
804-028C	17, 21
804-029C	17, 29, 37, 39, 41, 127
804-030C	29
804-034C	11, 33
804-055C	45
804-147C	5, 7
804-158C	109, 125
804-171C	21, 23
805-032C	135
805-045C	25, 27
805-058C	37, 39, 41, 43
805-083C	25, 27
805-088C	127, 133
805-104C	29, 37, 39, 41, 127
805-105C	21, 23
805-124C	127, 129, 133, 135
805-131C	127
805-195C	13
805-246C	45
805-249C	17
805-292C	37, 39, 41, 43
805-374C	29, 37, 39, 41
805-425C	141
805-548C	17
806-004C	139, 143
806-213C	149
807-271C	37, 41, 43
810-015C	133
810-146C	135
810-149C	129
810-162C	127, 129, 131, 135
810-644C	127, 133
810-888C	131
811-063C	127
811-238C	127, 141
811-337C	127, 141
811-394C	127, 141
811-619C	127
811-786C	127
8123.360.504.11	79
8123.460.105611	79
814-265C	47
814-449C	47
814-450C	47
814-451C	47
814-461C	47
814-478C	47
814-480C	47
815-242C	45
815-243C	45
815-425C	37
815-433C	39, 41
815-491C	43
816-246C	63
816-456C	61
816-481C	11
816-497C	45
816-606C	61
816-607C	61
816-608C	63
817-455C	11
817-936C	33
8180.014.240	79
8180.016.237	79
8180.016.238	79
818-042C	137
818-045C	137
818-055C	143
818-130C	137
818-142C	137
818-229C	137
818-230C	137, 145
818-276C	137, 139
818-540C	67, 69, 83
818-543C	137
818-552C	67, 69, 83, 137
818-555C	137
818-556C	137
818-561C	137
818-564C	137
818-714C	137
818-830C	137
818-840C	137, 139
820-168C	5, 7
820-169C	5, 7
820-170C	5, 7
820-249C	5, 7
820-478C	5, 7
820-479C	5, 7
820-724C	5, 7
820-725C	5, 7
820-726C	5, 7
820-727C	5, 7
822-020C	45
822-021C	45
822-033C	45
822-034C	45
826-112C	11, 69
826-247C	11, 67
826-317C	15, 105
826-319C	15, 99
826-322C	15, 85
826-324C	15, 101
826-486C	15, 85, 87, 89, 91, 99, 101, 103, 105, 111, 113, 115, 117
826-520C	11, 123, 125
826-521C	11, 107, 109

Part Number	Page
826-587C	69
826-603C	67
826-643C	11, 77
826-644C	11, 71
826-645C	11, 75
826-650C	11, 15, 111
826-721C	11, 15, 113
826-725C	11, 103
826-726C	11, 87
826-729C	11, 15, 115
826-730C	11, 15, 117
826-731C	11, 89
826-732C	11, 91
826-793C	11, 73
826-811C	15, 79
826-812C	15, 81, 83
826-818C	11, 65
826-848C	107, 123
826-921C	93
826-923C	95
826-925C	11, 15, 119
826-927C	11, 15, 121
826-928C	97
833-388C	143
833-389C	139
833-398C	139, 143
833-399C	143
833-560C	143
833-561C	143
833-563C	143
833-626C	143
833-627C	143
837-066C	11, 15
837-076C	11
837-079C	11
838-094C	137
838-588C	137
838-614C	137
838-615C	137, 139, 143
840-273C	9, 13
842-243C	11, 15, 33
842-460C	23
848-398C	139, 143
848-512C	139
848-513C	139
848-515C	143
848-531C	139, 143
848-843C	137
848-872C	137
851-167C	127
858-010C	139
858-381C	137
858-743C	137
858-744C	137
858-747C	137
858-748C	137
858-767C	137
858-769C	137
858-770C	137
858-949C	137
890-175C	49, 53, 57
890-182C	17
890-341C	49, 51, 53, 55, 57, 59
890-400C	49, 51, 55, 57, 59
890-671C	145
890-672C	57, 59
890-679C	145
890-680C	145
890-786C	35
890-806C	25
890-836C	23
890-850C	23
890-862C	21
890-970C	17, 37, 39, 41, 43
890-974C	29
891-177C	39, 41, 43
891-208C	35
891-236C	35, 57, 59
891-485C	33
891-487C	33
891-522C	31, 147
891-523C	31, 147
891-524C	17
891-529C	31, 147
891-530C	31, 147
891-531C	31, 147
891-532C	31, 147
891-534C	31, 147
891-999C	39, 41
9020.345.010	93, 95, 97, 119, 121
9020.448.020	93, 95, 97, 119, 121
91-24406	77
91-25023	71
92-24406	71, 77
92-25075	75
93-24406	77
93-25023	71
93-25075	75
9510.300.800	93, 95, 97, 119, 121
96-24406	71, 77
96-25075	75
96-26654	73
97-24406	77
97-25023	71
97-25075	75
97-26654	73
98-24406	71, 77
98-25075	75
98-26654	73
990-208R	35, 57, 59
99-24406	71, 73, 75, 77
A.305.500	123
A.305.501	107
A.709.500	87, 89, 91, 93, 95, 97, 101, 111, 113, 115, 117, 119, 121, 123
A.712.500	87, 89, 91, 93, 95, 97, 101, 111, 113, 115, 117, 119, 121
DWG 18548	69
DWG 18549	67
DWG 21167	85, 105
DWG 21171	99
DWG 25681	125
DWG 25682	109
DWG 26544	55
DWG 26557	27
DWG 26568	19
DWG 26569	21
DWG 26570	25

Part Number	Page
DWG 26959	123
DWG 26960	107
DWG 30528	111
DWG 33315	113
DWG 33338	103
DWG 35001	87
DWG 35997	73
DWG 37510	65
DWG 37650	33
DWG 37659	47
DWG 37676	45
DWG 37911	71
DWG 37912	75
DWG 37916	77
DWG 37917	79
DWG 37918	81
DWG 37919	83
DWG 37969	15
DWG 37970	13
DWG 37974	37
DWG 37975	43
DWG 37983	7
DWG 37992	5
DWG 39002	9
DWG 39003	11
DWG 39006	127
DWG 39008	17
DWG 39037	31, 147
DWG 39282	39
DWG 39286	23
DWG 39610	137
DWG 70419	41
DWG 78735	119
DWG 79625	97
DWG 79654	93
DWG 79662	95
DWG 79670	121
DWG11421	129, 135
DWG24726	101
DWG25900	131
DWG26541	61
DWG26542	63
DWG26543	53
DWG26545	49
DWG26547	51
DWG26548	57
DWG26549	59
DWG26550	29
DWG26663	133
DWG26943	145
DWG33297	35
DWG33987	115
DWG33988	117
DWG33989	89
DWG35002	91
DWG35345	139
DWG35346	143
DWG35349	141
DWG39389	149
J200UM-01-10.4	33
J-37-A	31, 147
J-37-R	31, 147
J-AC1-15-B	31, 147
N/A	137
U0.125.0531.00	87, 99, 103, 105, 111, 113
U0.125.0532.00	85, 89, 91, 101, 115, 117
U0.125.1301.00	99, 101, 103, 105
U0.125.1303.00	85, 87, 89, 91, 93, 95, 97, 111, 113, 115, 117, 119, 121
U0.125.2050.00	85, 87, 89, 91, 99, 101, 103, 105, 111, 113, 115, 117
U0.125.3002.00	87, 99, 103, 105, 111, 113
U0.125.3003.00	85, 89, 91, 101, 115, 117
U0.125.5003.00	85, 99, 101, 105
U0.125.5053.00	111, 113, 115, 117
U0.125.5061.00	87, 89, 91, 103
U0.125.6003.00	85, 99, 101, 105
U0.125.6053.00	111, 113, 115, 117
U0.125.6061.00	87, 89, 91, 103
U0.125.7100.00	85, 87, 89, 91, 93, 95, 97, 99, 101, 103, 105, 111, 113, 115, 117, 119, 121