Great Plains
Manufacturing, Inc.
www.greatplainsmfg.com

*Seed Rate Charts for the YP30/40 Planter**

This manual assists with proper setting of seeding and fertilizer rates for the: YP3010HDP, YP3020P, YP3025 30-Foot Yield-Pro® Planters, and the YP4010HDP, YP4020P, YP4025 40-Foot Yield-Pro® Planters.

For volumetric seeds, the rates indicated in the charts are approximate values. To assure the most accurate volumetric seeding rate it is recommended that the planter and meters be calibrated for the desired seed at the time of planting.

* Rates for YP3025A and YP4025A Air-Pro® Planters are provided in manual 401-627B.

ORIGINAL INSTRUCTIONS

EN

© Copyright 2012

Printed 2014-03-13

401-571B

Table of Contents

Introduction 1
Document Family 1
Models Covered 1
Singulated Planting Overview 2
Population Reference Information 2
Kernels Per Pound 2
Seeds per Unit 2
Seed Spacing 2
Checking Planting Rate 4
Checking Singulated Rate 4
Singulated Spacing: U.S. Customary Units 5
Singulator Plus™ Meter Planting 7
Reading a Singulated Rate Chart 7
Cotton, 120 Cell 8
Milo, 102 Cell 9
Milo, 135 Cell 10
Milo, 270 Cell 11
Soybeans, 100 Cell 12
Soybeans, 110 Cell 13
Finger Meter Planting 14
Reading a Finger Rate Range Chart 14
Rate Ranges, 6-Finger Meter 15
Rate Ranges, 12-Finger Meter 16
Finger Meter Brush Adjustment 17
Finger Meter Inserts 18
Finger Meter Sprocket Indexing (Stagger) 19
Sprocket Indexing Charts 20
Indexing Fine Adjustment 22
6-Finger Meter Stagger Adjustment 22
12-Finger Meter Stagger Adjustment 23
Volumetric Meter Planting 24
Calibrating Volumetric Rate Spreader Constant 26
Reading a Volumetric Chart 28
Volumetric Rate Range Charts 29
Barley, Wheat Narrow wheel 29
Barley, Wheat Wide wheel 30
Barley, V3 wheel (U.S. Customary Units) 31
Oats, Wheat Narrow wheel 32
Oats, Wheat Wide wheel 33
Oats, V3 wheel 34
Rice, Low Rate (U.S. Customary Units) 35
Rice, Medium Rate 36
Rice, High Rate 37
Rye, Wheat Narrow wheel 38
Rye, Wheat Wide wheel 39
Wheat, Hard Red Winter, Narrow wheel 40
Wheat, Hard Red Winter, Wide wheel 41
Wheat, Soft Red Winter, Wide wheel 42
Wheat, Soft Red Winter, V3 wheel 43
Singulator Plus Volumetric Seed Wheel Data 44
Fertilizer Rate 45
Fertilizer Rate Steps 45
Orifice Plate Selection 46
Determine Orifice Size 46
Install Orifice Plates 47
Row Shutoff 47
Strainer 48
Setting Relief Valve 48
Ground Drive Fertilizer Rate 49
YP30 CDS-John Blue Fertilizer Rates 50
YP40A CDS-John Blue Fertilizer Rates 51
Appendix A - Seed Lubricants 52
Seed Lubricants 52
Appendix B - Metric Charts 53

© Copyright 1994, 1995, 2008, 2009, 2010, 2011, 2012 All rights Reserved

Great Plains Manufacturing, Inc. provides this publication “as is” without warranty of any kind, either expressed or implied. While every precaution has been taken in the preparation of this manual, Great Plains Manufacturing, Inc. assumes no responsibility for errors or omissions. Neither is any liability assumed for damages resulting from the use of the information contained herein. Great Plains Manufacturing, Inc. reserves the right to revise and improve its products as it sees fit. This publication describes the state of this product at the time of its publication, and may not reflect the product in the future.

Trademarks of Great Plains Manufacturing, Inc. include: Singulator Plus, Swath Command, Terra-Tine.
Registered Trademarks of Great Plains Manufacturing, Inc. include:
Air-Pro, Clear-Shot, Discovator, Great Plains, Land Pride, MeterCone, Nutri-Pro, Seed-Lok, Solid Stand, Terra-Guard, Turbo-Chisel, Turbo-Chopper, Turbo Max, Turbo-Till, Ultra-Till, Verti-Till, Whirlfilter, Yield-Pro.
Brand and Product Names that appear and are owned by others are trademarks of their respective owners.
Printed in the United States of America

Introduction

This manual covers the following tasks for the 30- and 40-foot Yield-Pro® Planter:

- setting and checking seed rate for singulated crops
- setting and checking seed rate for volumetric ("granular") crops, and;
- applying liquid fertilizer from optional tanks on-board the planter and/or from a Great Plains PFC1600 or PFC2000 tank cart.

Application of dry fertilizer is covered in a separate manual, 403-362M.

Models Covered

This edition of the Seed Rate Manual applies to:

YP3010HDP-3610	10HDP Series, 36-Row, 10-inch
YP3010HDP-4475	10HDP Series, 44-Row, 7½-inch
YP3020P-3610	20 Series, 36-Row, 10-inch
YP3025-1230	25 Series, 12-Row, 30-inch
YP3025-1270	25 Series, 12-Row, 70 cm
YP3025-16TR36	25 Series, 12-Row (8 Twin), 36-inch
YP3025-1820	25 Series, 18-Row, 20-inch
YP3025-2315	25 Series, 23-Row, 15-inch
YP3025-2335	25 Series, 23-Row, 35 cm
YP3025-2415	25 Series, 24-Row, 15-inch
YP3025-24TR	25 Series, 24-Row (12 Twin), 30-inch
YP3025-24TR70	25 Series, 24-Row (12 Twin), 70 cm
YP3025-3610	25 Series, 36-Row, 10-inch
YP4010HDP-4810	10HD Series, 48-Row, 10in
YP4010HDP-6075	10HD Series, 62-Row, 7.5in
YP4020P-4810	20 Series, 48-Row, 10in
YP4025-1630	25 Series, 16-Row, 30in
YP4025-1670	25 Series, 16-Row, 70cm (27.5in)
YP4025-2420	25 Series, 24-Row, 20in
YP4025-3115	25 Series, 31-Row, 15in
YP4025-3135	25 Series, 31-Row, 35cm (13.8in)
YP4025-3215	25 Series, 32-Row, 15in
YP4025-32TR	25 Series, 32-Twin Row, 30in pairs
YP4025-32TR70	25 Series, 32-Twin Row, 70cm pairs
YP4025-4810	25 Series, 48-Row, 10in
YP4025F-1670[a]	25 Series, 16-Row, 70cm (27.5in)

a This manual (401-571B) covers seeding and liquid fertilizer application for this planter model. See manual 403-362M for dry fertilizer rates.

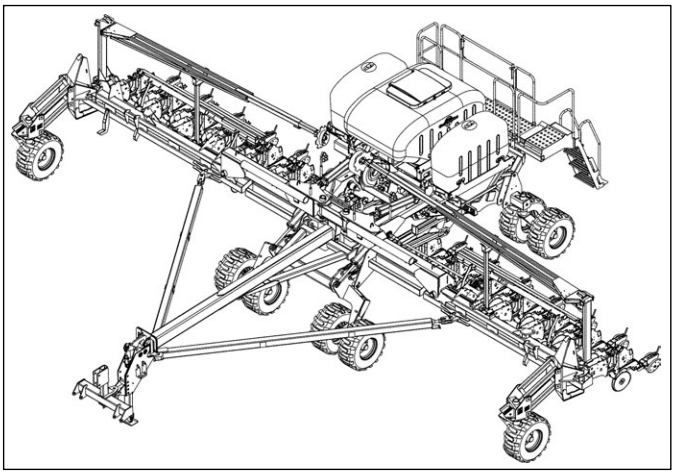

Figure 1
YP40 Planter

29162

Document Family

401-571B	Seed Rate Charts (this manual)
401-571M	YP40 Operator manual
401-703M	YP30 Operator manual
403-362M	YP40F Dry Fertilizer operator/rates
	DICKEY-john® IntelliAg® manuals:
110011508	Planter/Drill Control, User Level 1
110011501	Planter/Drill Control, User Level 2&3
11001-1126	DICKEY-john®hopper level sensor install
	QSG = Quick-Start Guide
110011545	QSG: YP3025-1230, -1270
110011546	QSG: YP3025-1820
110011551	QSG: YP3025-16TR36
110011547	QSG: YP3025-2315, -2335, -2415
110011550	QSG: YP3025-24TR, -24TR70
110011548	QSG: YP3010HDP/20P/25-3610
110011549	QSG: YP3010HDP-4475
110011499	QSG: YP4025-1630, YP4025/F-1670
11001532	QSG: YP4025-2420
11001533	QSG: YP4025-3115, -3135
110011536	QSG: YP4025-3215, -32TR, 32TR70
11001540	QSG: YP4010HDP/20P/25-4810
11001535	QSG: YP4010HDP-6075

Singulated Planting Overview

The information in this section covers important setup and checking information that applies to both:
Singulator Plus (wheel, at left in Figure 2) meters and Finger Pickup meters (at right in Figure 2).

There are additional Sections for each meter. See also:
"**Finger Meter Planting**" on page 14 and
"**Singulator Plus™ Meter Planting**" on page 7.

Singulating planting employs the seed monitor in "PLANTER CONTROL" mode. Volumetric planting uses "GRAN SEED CONTROL" or "granular" mode, and is covered at "**Volumetric Meter Planting**" on page 24.

NOTICE

Population Risk:
If the seed monitor is presently in GRAN SEED mode, follow the setup instructions carefully. Switching between seeding modes can cause some planter configuration values to be reset to defaults that are incorrect for your planter.

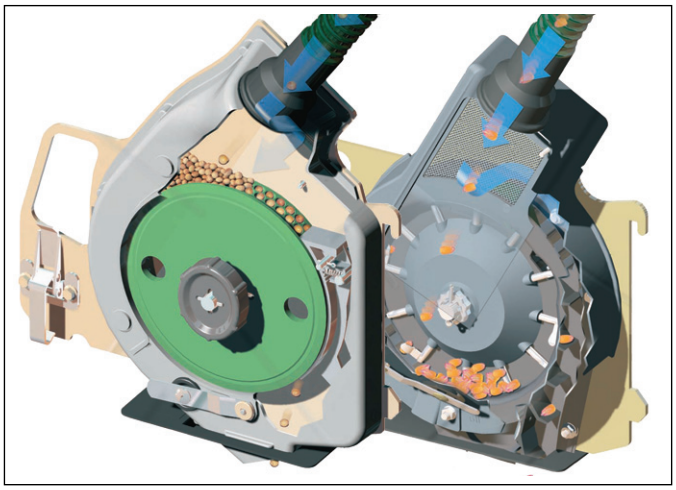

Figure 2
Singulating Seed Meters
29343

Population Reference Information

Seeds per Unit

If only pounds/acre (kilograms/hectare) is known, obtain the population count by multiplying the population weight by the "Kernels per pound" value from the seed container.

Example: Milo

Target rate:	4.5 pounds/acre
Seed density:	14500 seeds/pound
Population:	= Rate x Density
	= 4.5 x 14500, or:
	65250 seeds/acre

Seed Spacing

If only seed spacing is known, use the tables on pages 5, 6 and 54 to determine population.

1. For your crop, determine your intended population, in seeds/acre or seeds/hectare. If you know only the population, the charts on page 5 and 54 correlate population to seed spacing for several row spacings.
2. For your crop, population and desired field speed, verify the suitability and setup of your meter type, and seed wheel part number or finger count.

   For Singulator Plus seed meters and wheels, details and charts are found in "**Singulator Plus™ Meter Planting**" on page 7.

   For Finger Pickup meters, details and charts are found in "**Finger Meter Planting**" on page 14.

Kernels Per Pound

80,000 Seed Bag Weight	Kernels per Pound	80,000 Seed Bag Weight	Kernels per Pound
67.5 lbs	1,185	45.0 lbs	1,778
65.0 lbs	1,231	42.5 lbs	1,882
62.5 lbs	1,280	40.0 lbs	2,000
60.0 lbs	1,333	37.5 lbs	2,133
57.5 lbs	1,391	35.0 lbs	2,286
55.0 lbs	1,455	32.5 lbs	2,462
52.5 lbs	1,524	30.0 lbs	2,667
50.0 lbs	1,600	27.5 lbs	2,909
47.5 lbs	1,684	25.0 lbs	3,200

29649

Plant Population Seeds/Acre	10in Single	20in Single	30in Twin 15in Single	30in Single
	Seed Spacing			
14,000	44.8 in	22.4 in	29.9 in	14.9 in
15,000	41.8 in	20.9 in	27.9 in	13.9 in

Plant Population Seeds/Acre	10in Single	20in Single	30in Twin 15in Single	[illegible]
	Seed Spacing			
50,000	12.5 in	8.4 in	6.3 in	[illegible]
55,000	11.4 in	7.6 in	5.7 in	[illegible]

For step 3 through step 5, any needed data not provided in this manual can be found in one or more of:
DICKEY-john® Quick Start Guide
Planter Operator Manual
Refer to the DICKEY-john® IntelliAg® Planter/Drill Control Operator's Manual for details on setup item.

3. Verify, and as necessary setup or update the "Material" record for the singulated seed to be planted.

   The table at right lists the parameters that need to be reviewed or set. Values in <angle brackets> are at your choice or preference.

4. Verify, and as necessary setup or update the "Channel" assigned to the planter's hydraulic drive.

   If the monitor resets to defaults, Gear Ratio may be incorrect.

   Count rows individually for "# Seed Rows". A twin pair (if both openers are in use) counts as 2 rows.

   "Channel Width" is swath (number of active rows times spacing between active rows), for example:
   465 in = 31 rows x 15in per row.
   For twin rows, count twin pairs and pair-to-pair spacing, for example:
   480 in = 16 twin pairs (32 rows) x 30 in pair spacing

5. In the Material Library screen, makes sure that the Material (SOYBEANS in our example) is assigned to the Channel (Ch 1 in our example) which controls the planter's hydraulic drive.
6. Perform a Valve Calibration for the control channel.
7. Switch the seed monitor from Setup/Configuration mode to Operate mode. Load seed. Move the planter to the field.
8. Verify your planting rate per the instructions in the next topic. If the results are consistent with your setup, plant the crop.

Material	Data Required
Material Name	<crop name, such as "SOYBEANS">
Channel	"CH 1" (typically, can be 1-4)
Type	"PLANTER CONTROL"
Preset Method	"Disabled" unless populations vary
Target Rate	<your election>
Max Rate	<110% of Target> is suggested
Min Rate	<90% of Target> is suggested
Inc/Dec	"1.0%" is suggested
Seeds Per Rev	<seed wheel cell count or finger count>
Disc Low Limit	<from Rate Range or Wheels chart>
Disc High Limit	<from Rate Range or Wheels chart>
High Pop Alarm	<"20%"> is suggested
Low Pop Alarm	<"20%"> is suggested
Prod Level Alarm	"0" (not used on YP30/40 Planter)

Channel	Data Required
CHANNEL 1	(must be channel specified above)
Type	"PLANTER CONTROL"
Material Name	(must be material name specified above)
Control Mode	Auto
Drive Type	PWM 1
Drive Freq.	100 Hz
Input Filter	50%
Gear Ratio	1.900
Sensor Constant	360
# Seed Rows	<based on planter model/row setup>
Channel Width	<based on planter model/row setup>
Precharge Time	0
Delay Time	0
Flush Enable	Disabled

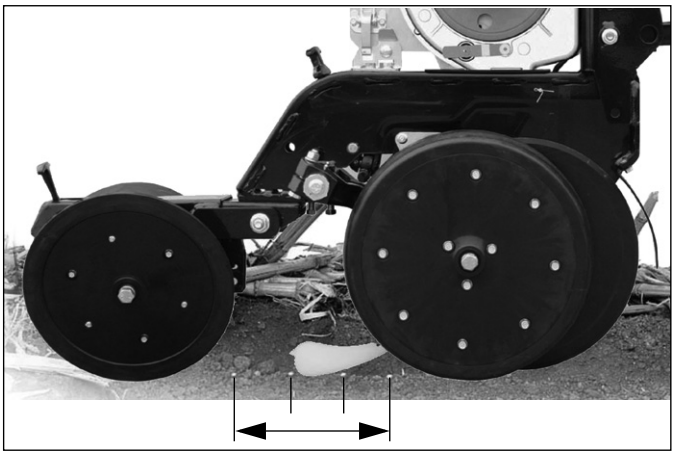

Figure 3
Furrow Check
29247

Checking Planting Rate

Although your seed monitor will report useful full pass results, cautious practice includes manually checking the seed rate early in the first pass.

The seed charts are based on cleaned and sized seed. Extreme seed variations, foreign material and tire pressure can materially affect planting rate.

Checking the rate also provides a double-check on your population calculations and drive configuration.

The procedure is different for singulated seeding (this page) and volumetric seeding (page 26).

Seed Rate Check Sample Size

(U.S. customary units. See page 53 for metric.)

Rows to Sample		Length of Sample Run	
Row Spacing*	Row Count	1/1000th Acre	1/200th Acre
7.5in Single	4	17ft 5in	
8in Single	4	16ft 4in	
9.5in Single	4	13ft 9in	
10in Single	2	26ft 2in	
15in Single	2	17ft 5in	87ft 1in
20in Single	1	26ft 2in	130ft 8in
22in Single	1	23ft 9in	118ft 10in
30in Single	1	17ft 5in	87ft 1in
36in Single	1	14ft 6in	72ft 7in
38in Single	1	13ft 9in	68ft 9in
40in Single	1	13ft 1in	65ft 4in
30in Twin	1 pair	17ft 5in	87ft 1in
36in Twin	1 pair	14ft 6in	72ft 7in
38in Twin	1 pair	13ft 9in	68ft 9in
40in Twin	1 pair	13ft 1in	65ft 4in

* Not all spacings may be offered on implements covered by this manual

31442

Checking Singulated Rate

1. Using the table above, determine the length and number of rows to check. For twin-row operation, a pair of row units counts as one row.
2. Adjust the planting depth to shallow on that number of rows units. Using center and wing-end row units for measurement provides a more accurate assessment of overall planter performance. Pick center units outside wheel tracks.
3. Use bungees or wire to tie-up the press wheel assembly on the tested row units, so that the seed is not covered. Tie up both in a pair for twin-row.
4. Operate the planter for the distance in the table, plus a few feet or meters for the press wheels to clear the end of the sample distance.
5. Count the number of seeds in the test rows.
6. Multiply the total number of seeds counted by 200 if measuring for $^1/_{200}$ acre, or by 1000 if measuring for $^1/_{1000}$ acre. This is the plant population in seeds per acre.
7. If the populated is substantially different than expected, see "**Troubleshooting**" in the planter Operator Manual.

Seed Rate Check Examples

20in spacing single-row planter:
Per the table, plant about 30 ft, measure 26ft 2in, and count 1 row for $^1/_{1000}$ acre. 180 seeds are counted:

180 x 1000 = 180,000 seeds per acre

30in spacing twin-row planter:
Per the table, plant about 90ft, measure 87ft 1in and count 2 double rows for $^1/_{200}$ acre. 170 seeds are counted:

170 x 200 = 34,000 seeds per acre

Singulated Spacing: U.S. Customary Units

Page 1 of 2 (metric spacing is on page 54).

Plant Population (seeds/acre)	7.5in Rows	10in Rows	Twin Row 30in 15in Rows	Twin Row 36in	Twin Row 38in	Twin Row 40in 20in Rows	30in Rows	36in Rows	38in Rows	40In Rows
	Seed Spacing (inches)									
14 000	59.7	44.8	29.9	24.9	23.6	22.4	14.9	12.4	11.8	11.2
15 000	55.8	41.8	27.9	23.2	22.0	20.9	13.9	11.6	11.0	10.5
16 000	52.3	39.2	26.1	21.8	20.6	19.6	13.1	10.9	10.3	9.8
17 000	49.2	36.9	24.6	20.5	19.4	18.4	12.3	10.2	9.7	9.2
18 000	46.5	34.8	23.2	19.4	18.3	17.4	11.6	9.7	9.2	8.7
19 000	44.0	33.0	22.0	18.3	17.4	16.5	11.0	9.2	8.7	8.3
20 000	41.8	31.4	20.9	17.4	16.5	15.7	10.5	8.7	8.3	7.8
21 000	39.8	29.9	19.9	16.6	15.7	14.9	10.0	8.3	7.9	7.5
22 000	38.0	28.5	19.0	15.8	15.0	14.3	9.5	7.9	7.5	7.1
23 000	36.4	27.3	18.2	15.2	14.4	13.6	9.1	7.6	7.2	6.8
24 000	34.8	26.1	17.4	14.5	13.8	13.1	8.7	7.3	6.9	6.5
25 000	33.5	25.1	16.7	13.9	13.2	12.5	8.4	7.0	6.6	6.3
26 000	32.2	24.1	16.1	13.4	12.7	12.1	8.0	6.7	6.3	6.0
27 000	31.0	23.2	15.5	12.9	12.2	11.6	7.7	6.5	6.1	5.8
28 000	29.9	22.4	14.9	12.4	11.8	11.2	7.5	6.2	5.9	5.6
29 000	28.8	21.6	14.4	12.0	11.4	10.8	7.2	6.0	5.7	5.4
30 000	27.9	20.9	13.9	11.6	11.0	10.5	7.0	5.8	5.5	5.2
31 000	27.0	20.2	13.5	11.2	10.6	10.1	6.7	5.6	5.3	5.1
32 000	26.1	19.6	13.1	10.9	10.3	9.8	6.5	5.4	5.2	4.9
33 000	25.3	19.0	12.7	10.6	10.0	9.5	6.3	5.3	5.0	4.8
34 000	24.6	18.4	12.3	10.2	9.7	9.2	6.1	5.1	4.9	4.6
35 000	23.9	17.9	11.9	10.0	9.4	9.0	6.0	5.0	4.7	4.5
36 000	23.2	17.4	11.6	9.7	9.2	8.7	5.8	4.8	4.6	4.4
37 000	22.6	17.0	11.3	9.4	8.9	8.5	5.7	4.7	4.5	4.2
38 000	22.0	16.5	11.0	9.2	8.7	8.3	5.5	4.6	4.3	4.1
39 000	21.4	16.1	10.7	8.9	8.5	8.0	5.4	4.5	4.2	4.0
40 000	20.9	15.7	10.5	8.7	8.3	7.8	5.2	4.4	4.1	3.9
41 000	20.4	15.3	10.2	8.5	8.1	7.6	5.1	4.2	4.0	3.8
42 000	19.9	14.9	10.0	8.3	7.9	7.5	5.0	4.1	3.9	3.7
43 000	19.5	14.6	9.7	8.1	7.7	7.3	4.9	4.1	3.8	3.6
44 000	19.0	14.3	9.5	7.9	7.5	7.1	4.8	4.0	3.8	3.6
45 000	18.6	13.9	9.3	7.7	7.3	7.0	4.6	3.9	3.7	3.5
46 000	18.2	13.6	9.1	7.6	7.2	6.8	4.5	3.8	3.6	3.4
47 000	17.8	13.3	8.9	7.4	7.0	6.7	4.4	3.7	3.5	3.3
48 000	17.4	13.1	8.7	7.3	6.9	6.5	4.4	3.6	3.4	3.3
49 000	17.1	12.8	8.5	7.1	6.7	6.4	4.3	3.6	3.4	3.2
50 000	16.7	12.5	8.4	7.0	6.6	6.3	4.2	3.5	3.3	3.1

31463

Singulated Spacing: U.S. Customary Units

Page 2 of 2 (metric spacing is on page 54).

Plant Population (seeds/acre)	7.5in Rows	10in Rows	Twin Row 30in 15in Rows	Twin Row 36in	Twin Row 38in	Twin Row 40in 20in Rows	30in Rows	36in Rows	38in Rows
	Seed Spacing (inches)								
50 000	16.7	12.5	8.4	7.0	6.6	6.3	4.2	3.5	3.3
55 000	15.2	11.4	7.6	6.3	6.0	5.7	3.8	3.2	3.0
60 000	13.9	10.5	7.0	5.8	5.5	5.2	3.5	2.9	2.8
65 000	12.9	9.7	6.4	5.4	5.1	4.8	3.2	2.7	2.5
70 000	11.9	9.0	6.0	5.0	4.7	4.5	3.0	2.5	2.4
75 000	11.2	8.4	5.6	4.6	4.4	4.2	2.8	2.3	2.2
80 000	10.5	7.8	5.2	4.4	4.1	3.9	2.6	2.2	2.1
85 000	9.8	7.4	4.9	4.1	3.9	3.7	2.5	2.0	1.9
90 000	9.3	7.0	4.6	3.9	3.7	3.5	2.3	1.9	1.8
95 000	8.8	6.6	4.4	3.7	3.5	3.3	2.2	1.8	1.7
100 000	8.4	6.3	4.2	3.5	3.3	3.1	2.1	1.7	1.7
105 000	8.0	6.0	4.0	3.3	3.1	3.0	2.0	1.7	1.6
110 000	7.6	5.7	3.8	3.2	3.0	2.9	1.9	1.6	1.5
115 000	7.3	5.5	3.6	3.0	2.9	2.7	1.8	1.5	1.4
120 000	7.0	5.2	3.5	2.9	2.8	2.6	1.7	1.5	1.4
125 000	6.7	5.0	3.3	2.8	2.6	2.5	1.7	1.4	1.3
130 000	6.4	4.8	3.2	2.7	2.5	2.4	1.6	1.3	1.3
135 000	6.2	4.6	3.1	2.6	2.4	2.3	1.5	1.3	1.2
140 000	6.0	4.5	3.0	2.5	2.4	2.2	1.5	1.2	1.2
145 000	5.8	4.3	2.9	2.4	2.3	2.2	1.4	1.2	1.1
150 000	5.6	4.2	2.8	2.3	2.2	2.1	1.4	1.2	1.1
155 000	5.4	4.0	2.7	2.2	2.1	2.0	1.3	1.1	1.1
160 000	5.2	3.9	2.6	2.2	2.1	2.0	1.3	1.1	1.0
165 000	5.1	3.8	2.5	2.1	2.0	1.9	1.3	1.1	1.0
170 000	4.9	3.7	2.5	2.0	1.9	1.8	1.2	1.0	1.0
175 000	4.8	3.6	2.4	2.0	1.9	1.8	1.2	1.0	0.9
180 000	4.6	3.5	2.3	1.9	1.8	1.7	1.2	1.0	0.9
185 000	4.5	3.4	2.3	1.9	1.8	1.7	1.1	0.9	0.9
190 000	4.4	3.3	2.2	1.8	1.7	1.7	1.1	0.9	0.9
195 000	4.3	3.2	2.1	1.8	1.7	1.6	1.1	0.9	0.8
200 000	4.2	3.1	2.1	1.7	1.7	1.6	1.0	0.9	0.8
225 000	3.7	2.8	1.9	1.5	1.5	1.4	0.9	0.8	0.7
250 000	3.3	2.5	1.7	1.4	1.3	1.3	0.8	0.7	0.7
275 000	3.0	2.3	1.5	1.3	1.2	1.1	0.8	0.6	0.6
300 000	2.8	2.1	1.4	1.2	1.1	1.0	0.7	0.6	0.6

Singulator Plus™ Meter Planting

Follow the steps in "**Singulated Planting Overview**" on page 2. At step 2 on page 2, follow the instructions in this section, which are specific to Singulator Plus™ meters when used with singulating seed wheels.

Volumetric planting with Singulator Plus™ meters is covered beginning on page 24. Singulated planting with finger pickup meters is covered beginning on page 14.

NOTICE

Maximum recommended speed is 7 miles per hour (11.3 kph), based on maximum meter rpms.

Excess speeds are known to deteriorate seed spacing control and depth control.

For your crop, verify that you have the correct seed wheels, and that your population and proposed field speed are within limits for that wheel. See "**Reading a Singulated Rate Chart**" below.

When ordering seed wheels, note that there are different part numbers for:
10HD/25P Series (Green wheels) and
20P Series (Black wheels).

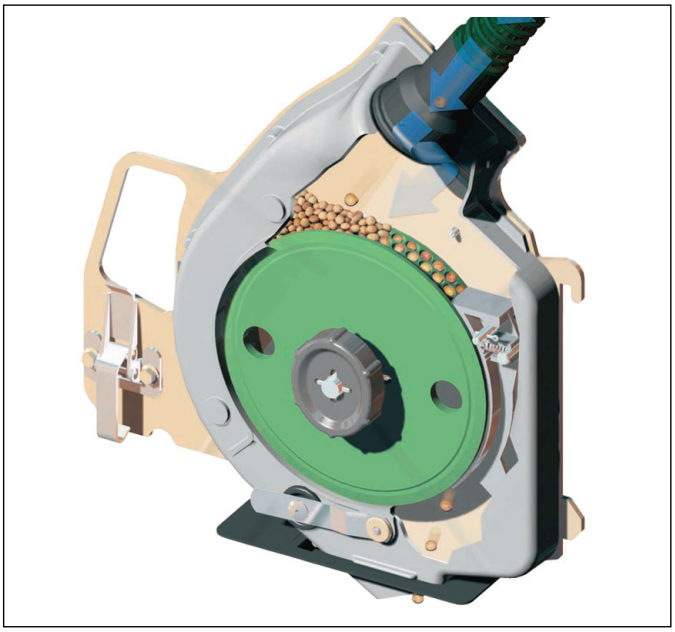

Figure 4
Singulator Plus™ Meter

29343

Reading a Singulated Rate Chart

- Consult the chart for your crop, meter wheel, cell count, and row spacing. Some crops have multiple seed wheels and pages.

Singulator Plus™ RPM Limits (Black Wheels) — **Soybean 100 Cell Wheel** — **Ezee Glide Plus Requirec** (Green Wheels)

403-071D 1700-2200 seeds/pound

	Planting Speed (mph)	Maximum Population (seeds/acre)	Minimum Population (seeds/acre)
7.5in Rows	4.0	653 400	99 000
	5.0	522 720	79 200

403-122D 1700-2200 seeds/pound

	Planting Speed (mph)	Maximum Population (seeds/acre)	Minimum Population (seeds/acre)
22in Rows	4.0	222 750	33 750
	5.0	178 200	27 000

- Find the table section for your row spacing.

Twin Row 30in		4.0	326 700	49 500
15in Rows		5.0	261 360	39 600
Max rpm	Min rpm	5.5	237 600	36 000
		6.0	217 800	33 000

36in Rows		4.0	136 125	20 625
		5.0	108 900	16 500
Max rpm	Min rpm	5.5	99 000	15 000
		6.0	90 750	13 750

- For your proposed ground speed, make sure your population or seed spacing is within range.

Twin Row 30in		4.0	326 700	49 500
15in Rows		5.0	261 360	39 600
Max rpm	Min rpm	5.5	237 600	36 000
		6.0	217 800	33 000
33	**5**	6.5	201 046	30 462
		7.0	186 686	28 286
Twin Row 36in		4.0	272 250	41 250
		5.0	217 800	33 000
Max rpm	Min rpm	5.5	198 000	30 000
		6.0	181 500	27 500
33	**5**	6.5	167 538	25 385
		7.0	155 571	23 571
Twin Row 38in		4.0	257 921	39 079
		5.0	206 337	31 263
Max	Min	5.5	187 579	28 421

36in Rows		4.0	136 125	20 625
		5.0	108 900	16 500
Max rpm	Min rpm	5.5	99 000	15 000
		6.0	90 750	13 750
33	**5**	6.5	83 769	12 692
		7.0	77 786	11 786
38in Rows		4.0	128 961	19 539
		5.0	103 168	15 632
Max rpm	Min rpm	5.5	93 789	14 211
		6.0	85 974	13 026
33	**5**	6.5	79 360	12 024
		7.0	73 692	11 165
40in Rows		4.0	122 513	18 563
		5.0	98 010	14 850
Max	Min	5.5	89 100	13 500

- Note minimum and maximum meter wheel rpms for that population.
- Enter the population and wheel cell count in the seed monitor.

Twin Row 36in		4.0	272 250	41 250
		5.0	217 800	33 000
Max rpm	Min rpm	5.5	198 000	30 000
		6.0	181 500	27 500
33	**5**	6.5	167 538	25 385
		7.0	155 571	23 571

38in Rows		4.0	128 961	19 539
		5.0	103 168	15 632
Max rpm	Min rpm	5.5	93 789	14 211
		6.0	85 974	13 026
33	**5**	6.5	79 360	12 024
		7.0	73 692	11 165

Cotton, 120 Cell

Metric chart is on page 58.

Singulator Plus™ RPM Limits

(Black Wheels)

403-078D	4000-4600 seeds/pound
403-077D	4600-5200 seeds/pound
403-076D	5200-6000 seeds/pound

Cotton 120 Cell Wheel

Ezee Glide Plus Required

(Green Wheels)

403-133D	4000-4600 seeds/pound
403-134D	4600-5200 seeds/pound
403-135D	5200-6000 seeds/pound

		Planting Speed (mph)	Maximum Population (seeds/acre)	Minimum Population (seeds/acre)
7.5in Rows		4.0	522 720	118 800
		5.0	418 176	95 040
Max rpm 22	Min rpm 5	5.5	380 160	86 400
		6.0	348 480	79 200
		6.5	321 674	73 108
		7.0	298 697	67 886
10in Rows		4.0	392 040	89 100
		5.0	313 632	71 280
Max rpm 22	Min rpm 5	5.5	285 120	64 800
		6.0	261 360	59 400
		6.5	241 255	54 831
		7.0	224 023	50 914
Twin Row 30in 15in Rows		4.0	261 360	59 400
		5.0	209 088	47 520
Max rpm 22	Min rpm 5	5.5	190 080	43 200
		6.0	174 240	39 600
		6.5	160 837	36 554
		7.0	149 349	33 943
Twin Row 36in		4.0	217 800	49 500
		5.0	174 240	39 600
Max rpm 22	Min rpm 5	5.5	158 400	36 000
		6.0	145 200	33 000
		6.5	134 031	30 462
		7.0	124 457	28 286
Twin Row 38in		4.0	206 337	46 895
		5.0	165 069	37 516
Max rpm 22	Min rpm 5	5.5	150 063	34 105
		6.0	137 558	31 263
		6.5	126 977	28 858
		7.0	117 907	26 797
Twin Row 40in 20in Rows		4.0	196 020	44 550
		5.0	156 816	35 640
Max rpm 22	Min rpm 5	5.5	142 560	32 400
		6.0	130 680	29 700
		6.5	120 628	27 415
		7.0	112 011	25 457

		Planting Speed (mph)	Maximum Population (seeds/acre)	Minimum Population (seeds/acre)
22in Rows		4.0	178 200	40 500
		5.0	142 560	32 400
Max rpm 22	Min rpm 5	5.5	129 600	29 455
		6.0	118 800	27 000
		6.5	109 662	24 923
		7.0	101 829	23 143
30in Rows		4.0	130 680	29 700
		5.0	104 544	23 760
Max rpm 22	Min rpm 5	5.5	95 040	21 600
		6.0	87 120	19 800
		6.5	80 418	18 277
		7.0	74 674	16 971
36in Rows		4.0	108 900	24 750
		5.0	87 120	19 800
Max rpm 22	Min rpm 5	5.5	79 200	18 000
		6.0	72 600	16 500
		6.5	67 015	15 231
		7.0	62 229	14 143
38in Rows		4.0	103 168	23 447
		5.0	82 535	18 758
Max rpm 22	Min rpm 5	5.5	75 032	17 053
		6.0	68 779	15 632
		6.5	63 488	14 429
		7.0	58 953	13 398
40in Rows		4.0	98 010	22 275
		5.0	78 408	17 820
Max rpm 22	Min rpm 5	5.5	71 280	16 200
		6.0	65 340	14 850
		6.5	60 314	13 708
		7.0	56 006	12 729

34249C

Milo, 102 Cell

Metric chart is on page 56.

Singulator Plus™ RPM Limits

(Black Wheels)

403-093D 10500-18000 seeds/pound

		Planting Speed (mph)	Maximum Population (seeds/acre)	Minimum Population (seeds/acre)
7.5in Rows		4.0	403 920	100 980
		5.0	323 136	80 784
Max rpm **20**	Min rpm **5**	5.5	293 760	73 440
		6.0	269 280	67 320
		6.5	248 566	62 142
		7.0	230 811	57 703
10in Rows		4.0	302 940	75 735
		5.0	242 352	60 588
Max rpm **20**	Min rpm **5**	5.5	220 320	55 080
		6.0	201 960	50 490
		6.5	186 425	46 606
		7.0	173 109	43 277
Twin Row 30in 15in Rows		4.0	201 960	50 490
		5.0	161 568	40 392
Max rpm **20**	Min rpm **5**	5.5	146 880	36 720
		6.0	134 640	33 660
		6.5	124 283	31 071
		7.0	115 406	28 851
Twin Row 36in		4.0	168 300	42 075
		5.0	134 640	33 660
Max rpm **20**	Min rpm **5**	5.5	122 400	30 600
		6.0	112 200	28 050
		6.5	103 569	25 892
		7.0	96 171	24 043
Twin Row 38in		4.0	159 442	39 861
		5.0	127 554	31 888
Max rpm **20**	Min rpm **5**	5.5	115 958	28 989
		6.0	106 295	26 574
		6.5	98 118	24 530
		7.0	91 110	22 777
Twin Row 40in 20in Rows		4.0	151 470	37 868
		5.0	121 176	30 294
Max rpm **20**	Min rpm **5**	5.5	110 160	27 540
		6.0	100 980	25 245
		6.5	93 212	23 303
		7.0	86 554	21 639

Milo 102 Cell Wheel

Ezee Glide Plus Required

(Green Wheels)

403-137D 10500-18000 seeds/pound

		Planting Speed (mph)	Maximum Population (seeds/acre)	Minimum Population (seeds/acre)
22in Rows		4.0	137 700	34 425
		5.0	110 160	27 540
Max rpm **20**	Min rpm **5**	5.5	100 145	25 036
		6.0	91 800	22 950
		6.5	84 738	21 185
		7.0	78 686	19 671
30in Rows		4.0	100 980	25 245
		5.0	80 784	20 196
Max rpm **20**	Min rpm **5**	5.5	73 440	18 360
		6.0	67 320	16 830
		6.5	62 142	15 535
		7.0	57 703	14 426
36in Rows		4.0	84 150	21 038
		5.0	67 320	16 830
Max rpm **20**	Min rpm **5**	5.5	61 200	15 300
		6.0	56 100	14 025
		6.5	51 785	12 946
		7.0	48 086	12 021
38in Rows		4.0	79 721	19 930
		5.0	63 777	15 944
Max rpm **20**	Min rpm **5**	5.5	57 979	14 495
		6.0	53 147	13 287
		6.5	49 059	12 265
		7.0	45 555	11 389
40in Rows		4.0	75 735	18 934
		5.0	60 588	15 147
Max rpm **20**	Min rpm **5**	5.5	55 080	13 770
		6.0	50 490	12 623
		6.5	46 606	11 652
		7.0	43 277	10 819

34249D

Milo, 135 Cell

Metric chart is on page 57.

Singulator Plus™ RPM Limits

(Black Wheels)

403-081D 12000-18000 seeds/pound
403-090D 10500-14000 seeds/pound

Milo 135 Cell Wheel

Ezee Glide Plus Required

(Green Wheels)

403-140D 12000-18000 seeds/pound
403-138D 10500-14000 seeds/pound

		Planting Speed (mph)	Maximum Population (seeds/acre)	Minimum Population (seeds/acre)
7.5in Rows		4.0	534 600	133 650
		5.0	427 680	106 920
Max rpm	Min rpm	5.5	388 800	97 200
20	5	6.0	356 400	89 100
		6.5	328 985	82 246
		7.0	305 486	76 371
10in Rows		4.0	400 950	100 238
		5.0	320 760	80 190
Max rpm	Min rpm	5.5	291 600	72 900
20	5	6.0	267 300	66 825
		6.5	246 738	61 685
		7.0	229 114	57 279
Twin Row 30in 15in Rows		4.0	267 300	66 825
		5.0	213 840	53 460
Max rpm	Min rpm	5.5	194 400	48 600
20	5	6.0	178 200	44 550
		6.5	164 492	41 123
		7.0	152 743	38 186
Twin Row 36in		4.0	222 750	55 688
		5.0	178 200	44 550
Max rpm	Min rpm	5.5	162 000	40 500
20	5	6.0	148 500	37 125
		6.5	137 077	34 269
		7.0	127 286	31 821
Twin Row 38in		4.0	211 026	52 757
		5.0	168 821	42 205
Max rpm	Min rpm	5.5	153 474	38 368
20	5	6.0	140 684	35 171
		6.5	129 862	32 466
		7.0	120 586	30 147
Twin Row 40in 20in Rows		4.0	200 475	50 119
		5.0	160 380	40 095
Max rpm	Min rpm	5.5	145 800	36 450
20	5	6.0	133 650	33 413
		6.5	123 369	30 842
		7.0	114 557	28 639

		Planting Speed (mph)	Maximum Population (seeds/acre)	Minimum Population (seeds/acre)
22in Rows		4.0	182 250	45 563
		5.0	145 800	36 450
Max rpm	Min rpm	5.5	132 545	33 136
20	5	6.0	121 500	30 375
		6.5	112 154	28 038
		7.0	104 143	26 036
30in Rows		4.0	133 650	33 413
		5.0	106 920	26 730
Max rpm	Min rpm	5.5	97 200	24 300
20	5	6.0	89 100	22 275
		6.5	82 246	20 562
		7.0	76 371	19 093
36in Rows		4.0	111 375	27 844
		5.0	89 100	22 275
Max rpm	Min rpm	5.5	81 000	20 250
20	5	6.0	74 250	18 563
		6.5	68 538	17 135
		7.0	63 643	15 911
38in Rows		4.0	105 513	26 378
		5.0	84 411	21 103
Max rpm	Min rpm	5.5	76 737	19 184
20	5	6.0	70 342	17 586
		6.5	64 931	16 233
		7.0	60 293	15 073
40in Rows		4.0	100 238	25 059
		5.0	80 190	20 048
Max rpm	Min rpm	5.5	72 900	18 225
20	5	6.0	66 825	16 706
		6.5	61 685	15 421
		7.0	57 279	14 320

34249E

Milo, 270 Cell

Metric chart is on page 58.

Singulator Plus™ RPM Limits

(Black Wheels)

403-082D 12000-18000 seeds/pound
403-091D 10500-14000 seeds/pound

Milo 270 Cell Wheel

Ezee Glide Plus Required

(Green Wheels)

403-141D 12000-18000 seeds/pound
403-139D 10500-14000 seeds/pound

		Planting Speed (mph)	Maximum Population (seeds/acre)	Minimum Population (seeds/acre)
7.5in Rows		**4.0**	**1 069 200**	**267 300**
		5.0	**855 360**	**213 840**
Max rpm	Min rpm	**5.5**	**777 600**	**194 400**
		6.0	**712 800**	**178 200**
20	**5**	**6.5**	**657 969**	**164 492**
		7.0	**610 971**	**152 743**
10in Rows		**4.0**	**801 900**	**200 475**
Max		**5.0**	**641 520**	**160 380**
Max rpm	Min rpm	**5.5**	**583 200**	**145 800**
		6.0	**534 600**	**133 650**
20	**5**	**6.5**	**493 477**	**123 369**
		7.0	**458 229**	**114 557**
Twin Row 30in		**4.0**	**534 600**	**133 650**
15in Rows		**5.0**	**427 680**	**106 920**
Max rpm	Min rpm	**5.5**	**388 800**	**97 200**
		6.0	**356 400**	**89 100**
20	**5**	**6.5**	**328 985**	**82 246**
		7.0	**305 486**	**76 371**
Twin Row 36in		**4.0**	**445 500**	**111 375**
		5.0	**356 400**	**89 100**
Max rpm	Min rpm	**5.5**	**324 000**	**81 000**
		6.0	**297 000**	**74 250**
20	**5**	**6.5**	**274 154**	**68 538**
		7.0	**254 571**	**63 643**
Twin Row 38in		**4.0**	**422 053**	**105 513**
		5.0	**337 642**	**84 411**
Max rpm	Min rpm	**5.5**	**306 947**	**76 737**
		6.0	**281 368**	**70 342**
20	**5**	**6.5**	**259 725**	**64 931**
		7.0	**241 173**	**60 293**
Twin Row 40in		**4.0**	**400 950**	**100 238**
20in Rows		**5.0**	**320 760**	**80 190**
Max rpm	Min rpm	**5.5**	**291 600**	**72 900**
		6.0	**267 300**	**66 825**
20	**5**	**6.5**	**246 738**	**61 685**
		7.0	**229 114**	**57 279**

		Planting Speed (mph)	Maximum Population (seeds/acre)	Minimum Population (seeds/acre)
22in Rows		**4.0**	**364 500**	**91 125**
		5.0	**291 600**	**72 900**
Max rpm	Min rpm	**5.5**	**265 091**	**66 273**
		6.0	**243 000**	**60 750**
20	**5**	**6.5**	**224 308**	**56 077**
		7.0	**208 286**	**52 071**
30in Rows		**4.0**	**267 300**	**66 825**
		5.0	**213 840**	**53 460**
Max rpm	Min rpm	**5.5**	**194 400**	**48 600**
		6.0	**178 200**	**44 550**
20	**5**	**6.5**	**164 492**	**41 123**
		7.0	**152 743**	**38 186**
36in Rows		**4.0**	**222 750**	**55 688**
		5.0	**178 200**	**44 550**
Max rpm	Min rpm	**5.5**	**162 000**	**40 500**
		6.0	**148 500**	**37 125**
20	**5**	**6.5**	**137 077**	**34 269**
		7.0	**127 286**	**31 821**
38in Rows		**4.0**	**211 026**	**52 757**
		5.0	**168 821**	**42 205**
Max rpm	Min rpm	**5.5**	**153 474**	**38 368**
		6.0	**140 684**	**35 171**
20	**5**	**6.5**	**129 862**	**32 466**
		7.0	**120 586**	**30 147**
40in Rows		**4.0**	**200 475**	**50 119**
		5.0	**160 380**	**40 095**
Max rpm	Min rpm	**5.5**	**145 800**	**36 450**
		6.0	**133 650**	**33 413**
20	**5**	**6.5**	**123 369**	**30 842**
		7.0	**114 557**	**28 639**

34249F

Soybeans, 100 Cell

Metric chart is on page 59.

Singulator Plus™ RPM Limits (Black Wheels)

Soybean 100 Cell Wheel

Ezee Glide Plus Required (Green Wheels)

403-071D 1700-2200 seeds/pound

		Planting Speed (mph)	Maximum Population (seeds/acre)	Minimum Population (seeds/acre)
7.5in Rows		**4.0**	**653 400**	**99 000**
		5.0	**522 720**	**79 200**
Max rpm **33**	Min rpm **5**	**5.5**	**475 200**	**72 000**
		6.0	**435 600**	**66 000**
		6.5	**402 092**	**60 923**
		7.0	**373 371**	**56 571**
10in Rows Max		**4.0**	**490 050**	**74 250**
		5.0	**392 040**	**59 400**
Max rpm **33**	Min rpm **5**	**5.5**	**356 400**	**54 000**
		6.0	**326 700**	**49 500**
		6.5	**301 569**	**45 692**
		7.0	**280 029**	**42 429**
Twin Row 30in 15in Rows		**4.0**	**326 700**	**49 500**
		5.0	**261 360**	**39 600**
Max rpm **33**	Min rpm **5**	**5.5**	**237 600**	**36 000**
		6.0	**217 800**	**33 000**
		6.5	**201 046**	**30 462**
		7.0	**186 686**	**28 286**
Twin Row 36in		**4.0**	**272 250**	**41 250**
		5.0	**217 800**	**33 000**
Max rpm **33**	Min rpm **5**	**5.5**	**198 000**	**30 000**
		6.0	**181 500**	**27 500**
		6.5	**167 538**	**25 385**
		7.0	**155 571**	**23 571**
Twin Row 38in		**4.0**	**257 921**	**39 079**
		5.0	**206 337**	**31 263**
Max rpm **33**	Min rpm **5**	**5.5**	**187 579**	**28 421**
		6.0	**171 947**	**26 053**
		6.5	**158 721**	**24 049**
		7.0	**147 383**	**22 331**
Twin Row 40in 20in Rows		**4.0**	**245 025**	**37 125**
		5.0	**196 020**	**29 700**
Max rpm **33**	Min rpm **5**	**5.5**	**178 200**	**27 000**
		6.0	**163 350**	**24 750**
		6.5	**150 785**	**22 846**
		7.0	**140 014**	**21 214**

403-122D 1700-2200 seeds/pound

		Planting Speed (mph)	Maximum Population (seeds/acre)	Minimum Population (seeds/acre)
22in Rows		**4.0**	**222 750**	**33 750**
		5.0	**178 200**	**27 000**
Max rpm **33**	Min rpm **5**	**5.5**	**162 000**	**24 545**
		6.0	**148 500**	**22 500**
		6.5	**137 077**	**20 769**
		7.0	**127 286**	**19 286**
30in Rows		**4.0**	**163 350**	**24 750**
		5.0	**130 680**	**19 800**
Max rpm **33**	Min rpm **5**	**5.5**	**118 800**	**18 000**
		6.0	**108 900**	**16 500**
		6.5	**100 523**	**15 231**
		7.0	**93 343**	**14 143**
36in Rows		**4.0**	**136 125**	**20 625**
		5.0	**108 900**	**16 500**
Max rpm **33**	Min rpm **5**	**5.5**	**99 000**	**15 000**
		6.0	**90 750**	**13 750**
		6.5	**83 769**	**12 692**
		7.0	**77 786**	**11 786**
38in Rows		**4.0**	**128 961**	**19 539**
		5.0	**103 168**	**15 632**
Max rpm **33**	Min rpm **5**	**5.5**	**93 789**	**14 211**
		6.0	**85 974**	**13 026**
		6.5	**79 360**	**12 024**
		7.0	**73 692**	**11 165**
40in Rows		**4.0**	**122 513**	**18 563**
		5.0	**98 010**	**14 850**
Max rpm **33**	Min rpm **5**	**5.5**	**89 100**	**13 500**
		6.0	**81 675**	**12 375**
		6.5	**75 392**	**11 423**
		7.0	**70 007**	**10 607**

34249G

Soybeans, 110 Cell

Metric chart is on page 60.

Singulator Plus™ RPM Limits (Black Wheels)

403-070D	2200-2700 seeds/pound
403-061D	2700-3200 seeds/pound
403-066D	3100-3800 seeds/pound
403-068D	3600-4000 seeds/pound

Soybean 110 Cell Wheel

Ezee Glide Plus Required (Green Wheels)

403-123D	2200-2700 seeds/pound
403-124D	2700-3200 seeds/pound
403-125D	3100-3800 seeds/pound
403-126D	3600-4000 seeds/pound

		Planting Speed (mph)	Maximum Population (seeds/acre)	Minimum Population (seeds/acre)
7.5in Rows		4.0	805 860	108 900
		5.0	644 688	87 120
Max rpm 37	Min rpm 5	5.5	586 080	79 200
		6.0	537 240	72 600
		6.5	495 914	67 015
		7.0	460 491	62 229
10in Rows Max		4.0	604 395	81 675
		5.0	483 516	65 340
Max rpm 37	Min rpm 5	5.5	439 560	59 400
		6.0	402 930	54 450
		6.5	371 935	50 262
		7.0	345 369	46 671
Twin Row 30in 15in Rows		4.0	402 930	54 450
		5.0	322 344	43 560
Max rpm 37	Min rpm 5	5.5	293 040	39 600
		6.0	268 620	36 300
		6.5	247 957	33 508
		7.0	230 246	31 114
Twin Row 36in		4.0	335 775	45 375
		5.0	268 620	36 300
Max rpm 37	Min rpm 5	5.5	244 200	33 000
		6.0	223 850	30 250
		6.5	206 631	27 923
		7.0	191 871	25 929
Twin Row 38in		4.0	318 103	42 987
		5.0	254 482	34 389
Max rpm 37	Min rpm 5	5.5	231 347	31 263
		6.0	212 068	28 658
		6.5	195 755	26 453
		7.0	181 773	24 564
Twin Row 40in 20in Rows		4.0	302 198	40 838
		5.0	241 758	32 670
Max rpm 37	Min rpm 5	5.5	219 780	29 700
		6.0	201 465	27 225
		6.5	185 968	25 131
		7.0	172 684	23 336

		Planting Speed (mph)	Maximum Population (seeds/acre)	Minimum Population (seeds/acre)
22in Rows		4.0	274 725	37 125
		5.0	219 780	29 700
Max rpm 37	Min rpm 5	5.5	199 800	27 000
		6.0	183 150	24 750
		6.5	169 062	22 846
		7.0	156 986	21 214
30in Rows		4.0	201 465	27 225
		5.0	161 172	21 780
Max rpm 37	Min rpm 5	5.5	146 520	19 800
		6.0	134 310	18 150
		6.5	123 978	16 754
		7.0	115 123	15 557
36in Rows		4.0	167 888	22 688
		5.0	134 310	18 150
Max rpm 37	Min rpm 5	5.5	122 100	16 500
		6.0	111 925	15 125
		6.5	103 315	13 962
		7.0	95 936	12 964
38in Rows		4.0	159 051	21 493
		5.0	127 241	17 195
Max rpm 37	Min rpm 5	5.5	115 674	15 632
		6.0	106 034	14 329
		6.5	97 878	13 227
		7.0	90 886	12 282
40in Rows		4.0	151 099	20 419
		5.0	120 879	16 335
Max rpm 37	Min rpm 5	5.5	109 890	14 850
		6.0	100 733	13 613
		6.5	92 984	12 565
		7.0	86 342	11 668

34249H

Finger Meter Planting

Follow the steps in "**Singulated Planting Overview**" on page 2. At step 2 on page 2, follow the instructions in this section, which are specific to finger pickup meters.

NOTICE

Recommended maximum speed is 6 miles per hour (11.2 kph), based on meter rpm limits.

Excess speeds are known to deteriorate seed spacing control and depth control.

a. For your proposed ground speed, check that your proposed population is within rpm limits for your 6- or 12-finger meters (this section, pages 15 and 77).

b. Set your meter brushes for your material (page 17).

c. If planting twin row, and indexing is desired, set the stagger between the rows of each pair (page 19).

If you are planting indexed twin row, at "**Singulated Planting Overview**" step 8 on page 3, also check the row-to-row seed spacing in each row pair. As necessary:

d. Adjust the stagger between pair rows using the instructions beginning on page 22.

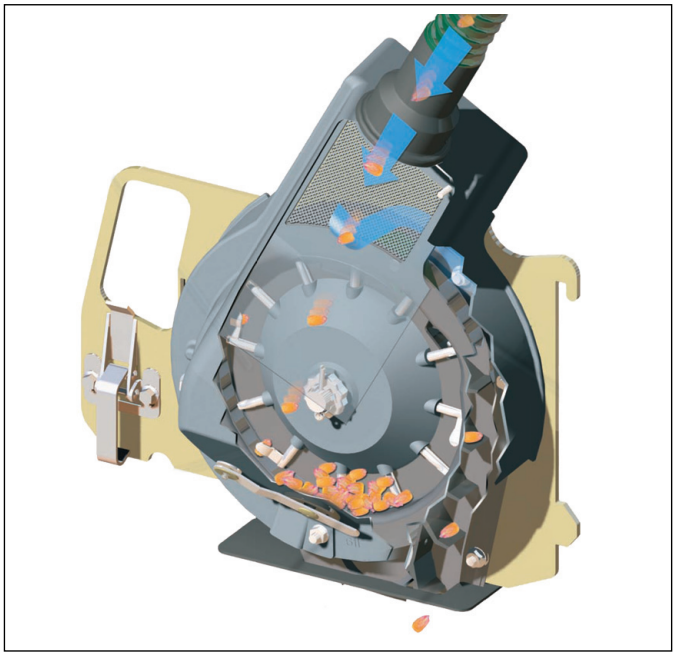

Figure 5
Finger Pickup Meter

29343

Reading a Finger Rate Range Chart

- Consult the chart for meter type.

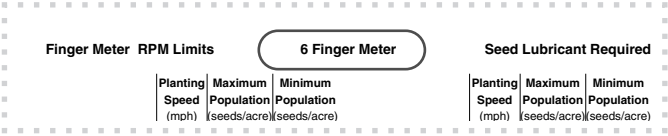

Finger Meter RPM Limits — 6 Finger Meter — Seed Lubricant Required

		Planting Speed (mph)	Maximum Population (seeds/acre)	Minimum Population (seeds/acre)
Twin Row 30in 15in Rows		4.0	50 490	26 730
		4.5	44 880	23 760
Max rpm 85	Min rpm 45	5.0	40 392	21 384
		5.5	36 720	19 440
		6.0	33 660	17 820

		Planting Speed (mph)	Maximum Population (seeds/acre)	Minimum Population (seeds/acre)
22in Rows		4.0	34 4	
		4.5	30 6	
Max rpm 85	Min rpm 45	5.0	27 5	
		5.5	25 0	
		6.0	22 9	

- Find your row spacing. Note the range of allowed meter rpms. Enter these limits in the seed monitor.

- Find the table rows that include your desired seed population or seed spacing. Typically, a population is within range in several rows.

  For example, 25,000 seeds/ac is within range in four rows.

- Note the range of ground speeds suitable for that population.

- Enter the population in the seed monitor.

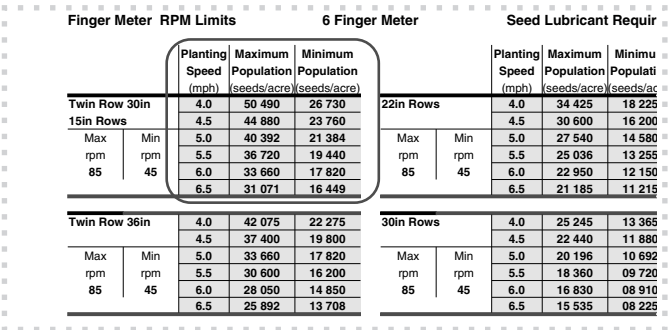

Finger Meter RPM Limits — 6 Finger Meter — Seed Lubricant Requir

		Planting Speed (mph)	Maximum Population (seeds/acre)	Minimum Population (seeds/acre)
Twin Row 30in 15in Rows		4.0	50 490	26 730
		4.5	44 880	23 760
Max rpm 85	Min rpm 45	5.0	40 392	21 384
		5.5	36 720	19 440
		6.0	33 660	17 820
		6.5	31 071	16 449
Twin Row 36in		4.0	42 075	22 275
		4.5	37 400	19 800
Max rpm 85	Min rpm 45	5.0	33 660	17 820
		5.5	30 600	16 200
		6.0	28 050	14 850
		6.5	25 892	13 708

		Planting Speed (mph)	Maximum Population (seeds/acre)	Minimu Populati (seeds/ac
22in Rows		4.0	34 425	18 225
		4.5	30 600	16 200
Max rpm 85	Min rpm 45	5.0	27 540	14 580
		5.5	25 036	13 255
		6.0	22 950	12 150
		6.5	21 185	11 215
30in Rows		4.0	25 245	13 365
		4.5	22 440	11 880
Max rpm 85	Min rpm 45	5.0	20 196	10 692
		5.5	18 360	09 720
		6.0	16 830	08 910
		6.5	15 535	08 225

Rate Ranges, 6-Finger Meter

Metric chart is on page 76.

Finger Meter RPM Limits — 6 Finger Meter — Seed Lubricant Required

		Planting Speed (mph)	Maximum Population (seeds/acre)	Minimum Population (seeds/acre)
Twin Row 30in		**4.0**	**50 490**	**26 730**
15in Rows		**4.5**	**44 880**	**23 760**
Max	Min	**5.0**	**40 392**	**21 384**
rpm	rpm	**5.5**	**36 720**	**19 440**
85	**45**	**6.0**	**33 660**	**17 820**
		6.5	**31 071**	**16 449**
Twin Row 36in		**4.0**	**42 075**	**22 275**
		4.5	**37 400**	**19 800**
Max	Min	**5.0**	**33 660**	**17 820**
rpm	rpm	**5.5**	**30 600**	**16 200**
85	**45**	**6.0**	**28 050**	**14 850**
		6.5	**25 892**	**13 708**
Twin Row 38in		**4.0**	**39 861**	**21 103**
		4.5	**35 432**	**18 758**
Max	Min	**5.0**	**31 888**	**16 882**
rpm	rpm	**5.5**	**28 989**	**15 347**
85	**45**	**6.0**	**26 574**	**14 068**
		6.5	**24 530**	**12 986**
Twin Row 40in		**4.0**	**37 868**	**20 048**
20in Rows		**4.5**	**33 660**	**17 820**
Max	Min	**5.0**	**30 294**	**16 038**
rpm	rpm	**5.5**	**27 540**	**14 580**
85	**45**	**6.0**	**25 245**	**13 365**
		6.5	**23 303**	**12 337**

		Planting Speed (mph)	Maximum Population (seeds/acre)	Minimum Population (seeds/acre)
22in Rows		**4.0**	**34 425**	**18 225**
		4.5	**30 600**	**16 200**
Max	Min	**5.0**	**27 540**	**14 580**
rpm	rpm	**5.5**	**25 036**	**13 255**
85	**45**	**6.0**	**22 950**	**12 150**
		6.5	**21 185**	**11 215**
30in Rows		**4.0**	**25 245**	**13 365**
		4.5	**22 440**	**11 880**
Max	Min	**5.0**	**20 196**	**10 692**
rpm	rpm	**5.5**	**18 360**	**09 720**
85	**45**	**6.0**	**16 830**	**08 910**
		6.5	**15 535**	**08 225**
36in Rows		**4.0**	**21 038**	**11 138**
		4.5	**18 700**	**09 900**
Max	Min	**5.0**	**16 830**	**08 910**
rpm	rpm	**5.5**	**15 300**	**08 100**
85	**45**	**6.0**	**14 025**	**07 425**
		6.5	**12 946**	**06 854**
38in Rows		**4.0**	**19 930**	**10 551**
		4.5	**17 716**	**09 379**
Max	Min	**5.0**	**15 944**	**08 441**
rpm	rpm	**5.5**	**14 495**	**07 674**
85	**45**	**6.0**	**13 287**	**07 034**
		6.5	**12 265**	**06 493**
40in Rows		**4.0**	**18 934**	**10 024**
		4.5	**16 830**	**08 910**
Max	Min	**5.0**	**15 147**	**08 019**
rpm	rpm	**5.5**	**13 770**	**07 290**
85	**45**	**6.0**	**12 623**	**06 683**
		6.5	**11 652**	**06 168**

34249A

Rate Ranges, 12-Finger Meter

Metric chart is on page 77.

Finger Meter RPM Limits **12 Finger Meter** **Seed Lubricant Required**

		Planting Speed (mph)	Maximum Population (seeds/acre)	Minimum Population (seeds/acre)
Twin Row 30in		**4.0**	**89 100**	**53 460**
15in Rows		**4.5**	**79 200**	**47 520**
Max	Min	**5.0**	**71 280**	**42 768**
rpm	rpm	**5.5**	**64 800**	**38 880**
75	**45**	**6.0**	**59 400**	**35 640**
		6.5	**54 831**	**32 898**
Twin Row 36in		**4.0**	**74 250**	**44 550**
		4.5	**66 000**	**39 600**
Max	Min	**5.0**	**59 400**	**35 640**
rpm	rpm	**5.5**	**54 000**	**32 400**
75	**45**	**6.0**	**49 500**	**29 700**
		6.5	**45 692**	**27 415**
Twin Row 38in		**4.0**	**70 342**	**42 205**
		4.5	**62 526**	**37 516**
Max	Min	**5.0**	**56 274**	**33 764**
rpm	rpm	**5.5**	**51 158**	**30 695**
75	**45**	**6.0**	**46 895**	**28 137**
		6.5	**43 287**	**25 972**
Twin Row 40in		**4.0**	**66 825**	**40 095**
20in Rows		**4.5**	**59 400**	**35 640**
Max	Min	**5.0**	**53 460**	**32 076**
rpm	rpm	**5.5**	**48 600**	**29 160**
75	**45**	**6.0**	**44 550**	**26 730**
		6.5	**41 123**	**24 674**

		Planting Speed (mph)	Maximum Population (seeds/acre)	Minimum Population (seeds/acre)
22in Rows		**4.0**	**60 750**	**36 450**
		4.5	**54 000**	**32 400**
Max	Min	**5.0**	**48 600**	**29 160**
rpm	rpm	**5.5**	**44 182**	**26 509**
75	**45**	**6.0**	**40 500**	**24 300**
		6.5	**37 385**	**22 431**
30in Rows		**4.0**	**44 550**	**26 730**
		4.5	**39 600**	**23 760**
Max	Min	**5.0**	**35 640**	**21 384**
rpm	rpm	**5.5**	**32 400**	**19 440**
75	**45**	**6.0**	**29 700**	**17 820**
		6.5	**27 415**	**16 449**
36in Rows		**4.0**	**37 125**	**22 275**
		4.5	**33 000**	**19 800**
Max	Min	**5.0**	**29 700**	**17 820**
rpm	rpm	**5.5**	**27 000**	**16 200**
75	**45**	**6.0**	**24 750**	**14 850**
		6.5	**22 846**	**13 708**
38in Rows		**4.0**	**35 171**	**21 103**
		4.5	**31 263**	**18 758**
Max	Min	**5.0**	**28 137**	**16 882**
rpm	rpm	**5.5**	**25 579**	**15 347**
75	**45**	**6.0**	**23 447**	**14 068**
		6.5	**21 644**	**12 986**
40in Rows		**4.0**	**33 413**	**20 048**
		4.5	**29 700**	**17 820**
Max	Min	**5.0**	**26 730**	**16 038**
rpm	rpm	**5.5**	**24 300**	**14 580**
75	**45**	**6.0**	**22 275**	**13 365**
		6.5	**20 562**	**12 337**

34249B

Finger Meter Brush Adjustment

The finger pick up meter has an adjustable brush.

The brush reduces or eliminates “doubles” (delivering two seeds per finger), but if set too aggressively can cause “skips” (delivering no seed on some fingers). As needed, adjust for minimal doubles and skips.

Refer to Figure 6

The adjustable brush provides additional flexibility to accommodate a wide range of seed sizes. Use lever Ⓛ to gently rotate the brush into position.

The settings range from 1 to 5 with detents at each half step, for a total of 9 detents. The factory default setting is $2\frac{1}{2}$. Although the numbers are molded into the meter housing, only “1” and “5” may be visible. To ensure consistency, rotate the lever Ⓛ fully counter-clockwise (1), and count detents as you advance it to the desired setting.

Use the general guidelines in the table at right to adjust the brush position to your seed size and shape. The numbers listed correspond to the numbers printed on the outer housing of your meter.

If there is a decal on your meter, its units are in pounds per 80,000 seed bag. The table below includes seeds per pound.

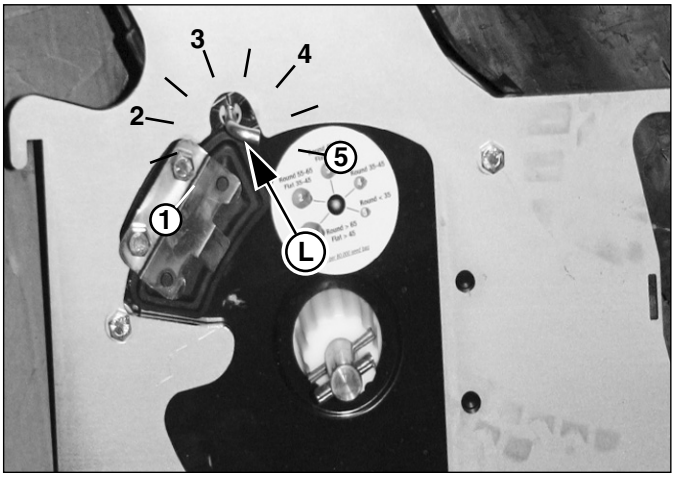

Figure 6
Finger Meter Brush Lever

25276

Note: These instructions describe the current finger pickup meter shipped with new Great Plains planters, which has an integrated adjustment lever for the brush. If you have added pre-existing finger meters after purchase, there is some chance that you may have previous model meters, adjusted by screwdriver rather than lever. If so, rely on counting detents to determine the setting. Not all have 9 detents.

Bag Weight (80,000 seeds)	Seeds Per Pound	Brush Setting	Seeds Per Kilogram	Bag Weight (80,000 seeds)
		Rounds		
65 lbs	1230 or less	1	2710 or less	29.5 kg
65 to 55 lbs	1230 to 1450	2	2710 to 3195	29.5 to 24.9 kg
55 to 45 lbs	1450 to 1780	3	3195 to 3925	24.9 to 20.4 kg
45 to 35 lbs	1780 to 2300	4	3925 to 5070	20.4 to 15.9 kg
35 lbs	2300 or more	5	5070 or more	15.9 kg
		Flats		
45 lbs	1780 or less	1	3925 or less	20.4 kg
45 to 35 lbs	1780 to 2300	2	3925 to 5070	20.4 to 15.9 kg
35 lbs	2300 or more	3	5070 or more	15.9 kg

29633

Finger Meter Inserts

Refer to Figure 7

The backing plate is equipped with an “A” insert ①. In tests, this insert provides the best performance in most seed sizes. However, there are two alternative inserts that can be used. Before changing to a different insert, please consult with a Great Plains service representative for a recommendation.

The identification of the insert type is molded into the back of the insert.

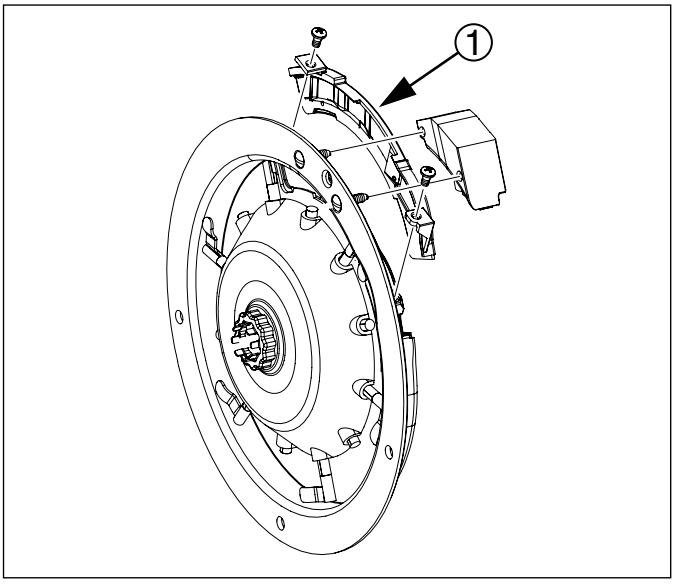

Figure 7
Finger Meter Insert

NOTICE

Meter Performance Risk:
Be cautious in using seed treatments, additives, and other chemicals when possible. They can cause meter performance problems and premature wear to meter parts.

Avoid the use of graphite with untreated seeds. If graphite must be used, use Precision® Planting graphite or Great Plains graphite which is less abrasive. Seeds with Maxi, Captan, Cruiser, Poncho and similar treatments can benefit from graphite. Use the amount recommended on the graphite container, usually 1 tsp(5ml)/unit or 1 tsp/80,000 seeds.

Always store meters in a dry, secure place, with brush in between two meter fingers. Moisture, temperature, nest-building insects and rodents can create problems.

Always pay attention to your seed monitor and operating manual. Monitor the amount of seed you are planting compared to your expectations. Always investigate abnormalities!

Finger Meter Sprocket Indexing (Stagger)

This topic applies only to finger meters.

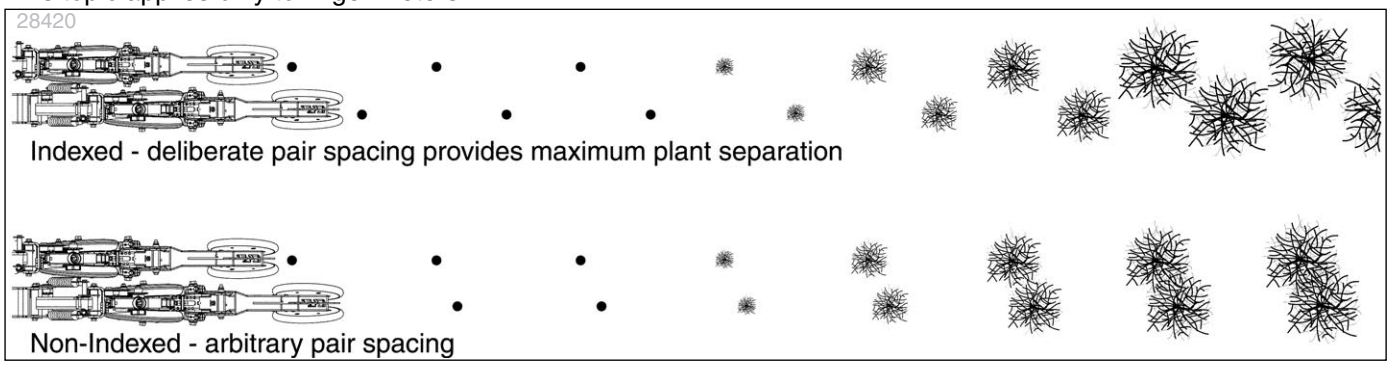

If you are planting:
• finger-metered,
• twin-row crops,
• at seed interval spacings above 6½ inches (16.5 cm),
you can synchronize each pair of adjacent meters in a twin row so that you achieve the maximum seed-to-seed spacing between the units of the pair.

If you are planting:
- single-row,
- or with singulating meters,
- or a volumetric crop,
- or twin row with seed spacings below 6½in (16.5 cm),
this section of the manual, and the sprocket indexing charts, do *not* apply to your operations.

If the initial indexing does not provide equal spacing, see "**Indexing Fine Adjustment**" on page 22.

Refer to Figure 8

1. Find the chart for your row spacing, meter finger count and desired seed population. Note the "**Tooth Number**" value for the "**Rear Meter**" in the far right column.
2. Remove both meters of a row unit pair. Note that tooth 1 and many of the other teeth on the driven sprockets ①, ② are stamped with a tooth number.

On front row unit:

3. Relax idlers ③ on front meter drive by lifting the spring off the rear post ④.
4. Lift chain off driven sprocket ①, and rotate sprocket so that tooth 1 is as close as possible to straight up (TDC: top dead center, 12:00 position).
5. Re-engage chain and idlers, making sure chain is taut at top, and that sprocket tooth 1 has not shifted off TDC.

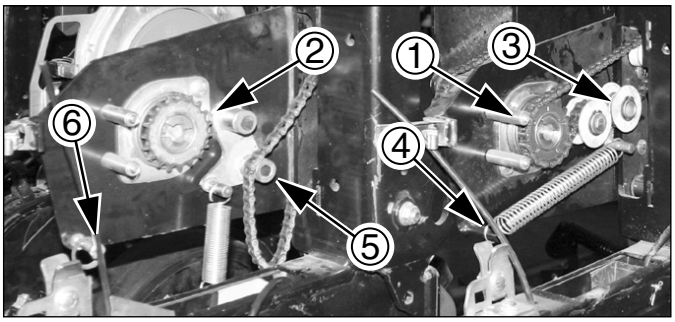

Figure 8 25417
Sprocket Indexing

On rear row unit:

6. Relax idlers ⑤ on rear meter drive by lifting the spring off the rear post ⑥.
7. Lift chain off driven sprocket ②, and rotate sprocket so that the tooth number called for in the chart is at TDC (or is the same as the front row sprocket).
8. Re-engage chain and idlers, making sure chain is taut at top, and that the designated sprocket tooth has not shifted off TDC.
9. Re-install meters. No particular wheel orientation is required during meter installation. The meter engagement is symmetrical, and the results identical no matter how the coupler captures the meter shaft.

Sprocket Indexing Charts

1. For: your 6- or 12-finger meter, and your twin row spacing (30in on this page) find your seed rate in the Population column, or your seed spacing in the Seed Spacing column. Seed spacing is seed-to-seed within a single row of a twin row pair.
2. At the front/forward row unit of a pair, set the driven (final) sprocket of the meter drive so that tooth stamped #1 is straight up (TDC, 12:00 position).
3. At the rear/trailing row unit of the pair, set the driven sprocket so that the tooth number at "Rear Meter" is in the straight up 12:00 position.

NOTICE

Not Rate or Spacing Charts:
These are NOT seed rate or seed spacing charts. These are for staggering seed spacing between the rows of a twin row.

Note: For adjusting spacing between rows of the pair, see "**Indexing Fine Adjustment**" on page 22.

NOTICE

Setting Error Risk:
Verify the 12:00 sprocket tooth position with the top length of chain taut.

These charts are in U.S. customary units. See page 78 for metric charts (70cm twin row).

6 Finger Meter Twin Row Sprocket Indexing

30in (76.2cm) Twin Row		Set Sprocket to Tooth Number on ..	
Population Seeds per Acre	Single Row Seed Spacing (in)	Front Meter	Rear Meter
15,700 to 17,300	24.2 to 26.6	1	4
17,300 to 18,800	22.2 to 24.2	1	7
18,800 to 20,400	20.5 to 22.2	1	10
20,400 to 22,000	19.0 to 20.5	1	13
22,000 to 23,600	17.7 to 19.0	1	16
23,600 to 25,000	16.7 to 17.7	1	19
25,000 to 26,600	15.7 to 16.7	1	3
26,600 to 28,300	14.8 to 15.7	1	6
28,300 to 29,900	14.0 to 14.8	1	9
29,900 to 31,500	13.3 to 14.0	1	12
31,500 to 33,000	12.7 to 13.3	1	15
33,000 to 34,700	12.1 to 12.7	1	18
34,700 to 36,200	11.6 to 12.1	1	2
36,200 to 37,800	11.1 to 11.6	1	5
37,800 to 39,300	10.6 to 11.1	1	8
39,300 to 40,800	10.3 to 10.6	1	11
40,800 to 42,500	9.8 to 10.3	1	14
42,500 to 44,000	9.5 to 9.8	1	17
44,000 to 45,400	9.2 to 9.5	1	1
45,400 to 47,000	8.9 to 9.2	1	4
47,000 to 48,600	8.6 to 8.9	1	7
48,600 to 50,400	8.3 to 8.6	1	10
50,400 to 51,800	8.1 to 8.3	1	13
51,800 to 53,300	7.8 to 8.1	1	16

31456B

12 Finger Meter Twin Row Sprocket Indexing

30in (76.2cm) Twin Row		Set Sprocket to Tooth Number on ..	
Population Seeds per Acre	Single Row Seed Spacing (in)	Front Meter	Rear Meter
26,600 to 28,300	14.8 to 15.7	1	13
28,300 to 29,900	14.0 to 14.8	1	5
29,900 to 31,500	13.3 to 14.0	1	16
31,500 to 33,000	12.7 to 13.3	1	8
33,000 to 34,700	12.1 to 12.7	1	19
34,700 to 36,200	11.6 to 12.1	1	11
36,200 to 37,800	11.1 to 11.6	1	3
37,800 to 39,300	10.6 to 11.1	1	14
39,300 to 40,800	10.3 to 10.6	1	6
40,800 to 42,500	9.8 to 10.3	1	17
42,500 to 44,000	9.5 to 9.8	1	9
44,000 to 45,400	9.2 to 9.5	1	1
45,400 to 47,000	8.9 to 9.2	1	12
47,000 to 48,600	8.6 to 8.9	1	4
48,600 to 50,400	8.3 to 8.6	1	15
50,400 to 51,800	8.1 to 8.3	1	7
51,800 to 53,300	7.9 to 8.1	1	18
53,300 to 55,000	7.6 to 7.9	1	10
55,000 to 56,600	7.4 to 7.6	1	2
56,600 to 58,200	7.2 to 7.4	1	13
58,200 to 59,700	7.0 to 7.2	1	5
59,700 to 61,300	6.8 to 7.0	1	16
61,300 to 62,900	6.7 to 6.8	1	8
62,900 to 64,400	6.5 to 6.7	1	19

31457B

NOTICE

Not Rate or Spacing Charts:
These are NOT seed rate or seed spacing charts. These are for staggering seed spacing between the rows of a twin row.

Note: For adjusting spacing between rows of the pair, see "**Indexing Fine Adjustment**" on page 22.

6 Finger Meter Twin Row Sprocket Indexing

36in (91.4cm) Twin Row		Set Sprocket to Tooth Number on ..	
Population Seeds per Acre	Single Row Seed Spacing (in)	Front Meter	Rear Meter
13,100 to 14,400	24.2 to 26.6	1	4
14,400 to 15,700	22.2 to 24.2	1	7
15,700 to 17,000	20.5 to 22.2	1	10
17,000 to 18,300	19.0 to 20.5	1	13
18,300 to 19,700	17.7 to 19.0	1	16
19,700 to 20,900	16.7 to 17.7	1	19
20,900 to 22,200	15.7 to 16.7	1	3
22,200 to 23,600	14.8 to 15.7	1	6
23,600 to 24,900	14.0 to 14.8	1	9
24,900 to 26,200	13.3 to 14.0	1	12
26,200 to 27,500	12.7 to 13.3	1	15
27,500 to 28,900	12.1 to 12.7	1	18
28,900 to 30,200	11.6 to 12.1	1	2
30,200 to 31,500	11.1 to 11.6	1	5
31,500 to 32,800	10.6 to 11.1	1	8
32,800 to 34,000	10.3 to 10.6	1	11
34,000 to 35,400	9.8 to 10.3	1	14
35,400 to 36,700	9.5 to 9.8	1	17
36,700 to 37,800	9.2 to 9.5	1	1
37,800 to 39,200	8.9 to 9.2	1	4
39,200 to 40,500	8.6 to 8.9	1	7
40,500 to 42,000	8.3 to 8.6	1	10
42,000 to 43,200	8.1 to 8.3	1	13
43,200 to 44,400	7.8 to 8.1	1	16

31456C

NOTICE

Setting Error Risk:
Verify the 12:00 sprocket tooth position with the top length of chain taut.

12 Finger Meter Twin Row Sprocket Indexing

36in (91.4cm) Twin Row		Set Sprocket to Tooth Number on ..	
Population Seeds per Acre	Single Row Seed Spacing (in)	Front Meter	Rear Meter
22,200 to 23,600	14.8 to 15.7	1	13
23,600 to 24,900	14.0 to 14.8	1	5
24,900 to 26,200	13.3 to 14.0	1	16
26,200 to 27,500	12.7 to 13.3	1	8
27,500 to 28,900	12.1 to 12.7	1	19
28,900 to 30,200	11.6 to 12.1	1	11
30,200 to 31,500	11.1 to 11.6	1	3
31,500 to 32,800	10.6 to 11.1	1	14
32,800 to 34,000	10.3 to 10.6	1	6
34,000 to 35,400	9.8 to 10.3	1	17
35,400 to 36,700	9.5 to 9.8	1	9
36,700 to 37,800	9.2 to 9.5	1	1
37,800 to 39,200	8.9 to 9.2	1	12
39,200 to 40,500	8.6 to 8.9	1	4
40,500 to 42,000	8.3 to 8.6	1	15
42,000 to 43,200	8.1 to 8.3	1	7
43,200 to 44,400	7.9 to 8.1	1	18
44,400 to 45,900	7.6 to 7.9	1	10
45,900 to 47,200	7.4 to 7.6	1	2
47,200 to 48,500	7.2 to 7.4	1	13
48,500 to 49,800	7.0 to 7.2	1	5
49,800 to 51,100	6.8 to 7.0	1	16
51,100 to 52,400	6.7 to 6.8	1	8
52,400 to 53,700	6.5 to 6.7	1	19

31457C

Indexing Fine Adjustment

If, after indexing, the twin-row side-to-side seed stagger is substantially imbalanced, it is possible to make small adjustments that may correct it. Imbalance can occur over time as row unit chains wear and stretch.

The procedure is different for 6- and 12-finger meters.

If an adjustment is made, test it on one row pair before adjusting the entire planter.

Before making any Indexing Adjustments:

- Check actual planted seed spacing. Seed Spacing is found by measuring the distance between 25 correctly planted seeds in one row and dividing by 24. (A visible skip or double is counted as one seed.)
- Make sure the current front sprocket index is 1, and the current rear sprocket index number matches the number in the indexing chart for actual seed spacing being planted.

6-Finger Meter Stagger Adjustment

Find your current indexing value row in the chart on page 20.

Each (sprocket tooth) number directly above or below the current rear meter sprocket setting in the right most column of the seed indexing chart represents a small movement of the rear row seed relative to the front row seed.

Changing rear your sprocket to the next number up in the chart *retards*, moving each rear row seed back a small amount.

Changing rear sprocket to the next number down in the chart *advances*, moving each rear row seed ahead a small amount.

Example 1:

The 6 Finger, Twin Row 30in planting population is 32000 or 13.1in seed spacing. The chart setting for the rear sprocket is [15]. Each rear row seed should fall 6.6in behind the front row seed.

If each rear row seed measures only 5in behind the front row seed, reset the rear meter sprocket to the next number ***up*** in the chart [12]. This moves the rear seeds back to make the stagger closer to 6.6in.

Example 2:

The 6 Finger, Twin Row 30in planting population is 32000 or 13.1in seed spacing. The chart setting for the rear sprocket is [15]. Each rear row seed should fall 6.6in behind front row seed.

If each rear row seed measures 9in behind the front row seed, reset the rear meter sprocket to the next number ***down*** in the chart [18]. This moves the rear seeds ahead to make the stagger closer to 6.6in.

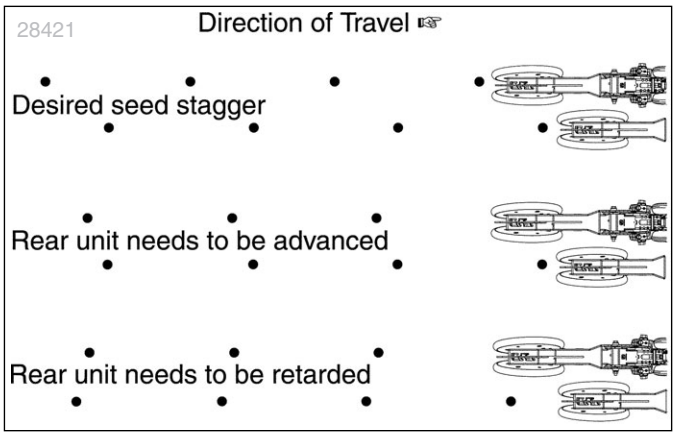

Seeds per Acre	Seed Spacing (in)	Front Meter	Rear Meter
700 to 17,300	24.2 to 26.6	1	4
300 to 18,800	22.2 to 24.2	1	7
800 to 20,400	20.5 to 22.2	1	10
400 to 22,000	19.0 to 20.5	1	13
000 to 23,600	17.7 to 19.0	1	16
600 to 25,000	16.7 to 17.7	1	19
000 to 26,600	15.7 to 16.7	1	3
600 to 28,300	14.8 to 15.7	1	6
300 to 29,900	14.0 to 14.8	1	9
900 to 31,500	13.3 to 14.0	1	12 (Retard)
500 to 33,000	12.7 to 13.3	1	15 (Current)
000 to 34,700	12.1 to 12.7	1	18 (Advance)
700 to 36,200	11.6 to 12.1	1	2
200 to 37,800	11.1 to 11.6	1	5

Figure 9: Portion of Sprocket Indexing Chart

YP40-index 06.eps

12-Finger Meter Stagger Adjustment

Before making any Indexing Adjustments, check actual planted seed spacing. Seed Spacing is found by measuring the distance between 25 correctly planted seeds in one row and dividing by 24. (A visible skip or double should be counted as one seed.) Make sure current front index is 1, and current rear sprocket index number matches the number in the indexing chart for actual seed spacing being planted.

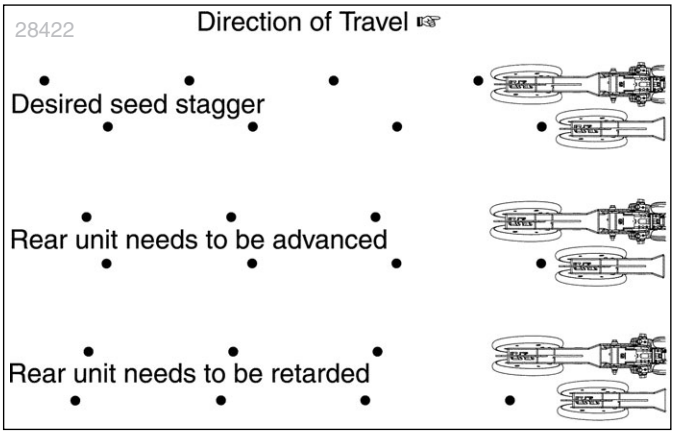

Find your current indexing value row in the chart on page 20.

Each (sprocket tooth) number directly above or below the current rear meter sprocket setting in the right most column of the seed indexing chart represents a small movement of the rear row seed relative to the front row seed.

Changing rear your sprocket to the next number *down* in the chart *retards*, moving each rear row seed back a small amount.

Changing rear sprocket to the next number *up* in the chart *advances*, moving each rear row seed ahead a small amount.

Example 1:

The 12 Finger Twin Row 30in planting population is 37000 or 11.3n seed spacing. The chart setting for the rear sprocket is [3]. Each rear row seed should fall 5.6in behind the front row seed.

If each rear row seed measures 7in behind the front row seed, reset the rear meter sprocket to the next number ***down*** in the chart [14]. This will move the rear seeds ahead and make the stagger closer to 5.6in.

Example 2:

The 12 Finger Twin Row 30in planting population is 37000 or 11.3in seed spacing. The chart setting for the rear sprocket is [3]. Each rear row seed should fall 5.6in behind the front row seed.

If each rear row seed measures 4in behind the front row seed, reset the rear meter sprocket to the next number ***up*** in the chart [11]. This will move the rear seeds back to make the stagger closer to 5.6in.

12 Finger Meter Twin Row Sprocket Indexing

30in (76.2cm) Twin Row		Set Sprocket to Tooth Number on ..	
Population Seeds per Acre	Single Row Seed Spacing (in)	Front Meter	Rear Meter
26,600 to 28,300	14.8 to 15.7	1	13
28,300 to 29,900	14.0 to 14.8	1	5
29,900 to 31,500	13.3 to 14.0	1	16
31,500 to 33,000	12.7 to 13.3	1	8
33,000 to 34,700	12.1 to 12.7	1	19
34,700 to 36,200	11.6 to 12.1	1	11 ☞ Advance
36,200 to 37,800	11.1 to 11.6	1	3 ☞ Current
37,800 to 39,300	10.6 to 11.1	1	14 ☞ Retard
39,300 to 40,800	10.3 to 10.6	1	6
40,800 to 42,500	9.8 to 10.3	1	17
42,500 to 44,000	9.5 to 9.8	1	9

Figure 10: Portion of Sprocket Indexing Chart

YP40-index 12.eps

Volumetric Meter Planting

In Singulator Plus™ planting with volumetric[a] seed wheels, planting rate is determined by:

- row spacing
- crop and seed variant
- meter wheel selection, and
- meter drive configuration (which relies on the “pounds per meter revolution” data in the following tables).

There are no other adjustments, but to achieve the desired rate, calibration is strongly recommended, and there is a recommended range of meter rpms, which affects the range of ground speeds, shown in the following tables. The optimal rpm varies with meter wheel and seed type.

Volumetric planting uses “GRAN SEED CONTROL” or “granular” mode. Singulated planting employs the seed monitor in “PLANTER CONTROL” mode, and is covered at “**Singulated Planting Overview**” on page 2.

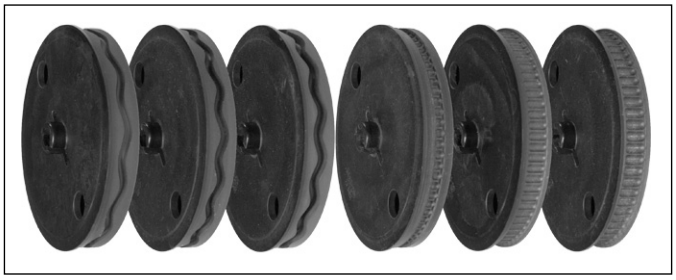

Figure 11 29344
Volumetric Seed Wheels

NOTICE

Population Risk:
If the seed monitor is presently in PLANTER CONTROL mode, follow the setup instructions carefully. Switching between seeding modes can cause some planter configuration values to be reset to defaults that are incorrect for your planter.

1. For your crop, determine your intended population, in pounds/acre or kg/hectare.
2. For your crop, population and desired field speed, verify the suitability of your seed wheel at the intended population and field speed. See “**Reading a Volumetric Chart**” on page 28.

Note: If a rate/speed table is not provided for your crop, that crop has not yet been tested on the YP30/40 Planter planter.

WHEAT

Ezee Glide Plus Required

(Hard Red Winter)
lb/bu: 64
(no seed treatment)

Max rpm	Min rpm	Pounds per rev.
30	12	0.078

7.5in Rows

Planting Speed (mph)	Maximum Pounds per Acre	Minimum Pounds per Acre
4	449	180
5	359	144
6	299	120
7	256	103
8	224	90

a. Volumetric planting is referred to as “GRAN” or “granular” in the seed monitor manual and displays.

For step 3 through step 5, any needed data not provided in this manual can be found in one or more of:
DICKEY-john® Quick Start Guide
YP30/40 Planter Operator Manual
Refer to the DICKEY-john® IntelliAg® Planter/Drill Control Operator's Manual for details on setup items.

3. Verify, and as necessary setup or update the "Material" record for the granular seed to be planted.

   The table at right lists the parameters that need to be reviewed or set. Values in <angle brackets> are at your choice or preference.

Note: "Spreader Constant" is a critical value, and must be established by calibration. Do not plant with the default value for this item. No entry is require if calibration is planned prior to planting (page 26).

Otherwise, enter a value from a previous calibration of the same wheels, seed and seed variety. If these is any chance that the seed batch varies from the prior calibration, re-calibrate.

4. Verify, and as necessary setup or update the "Channel" assigned to the planter's hydraulic drive.

   If the monitor resets to defaults, Gear Ratio may be incorrect.

   Count rows individually for "# Seed Rows". A twin pair (if both openers are in use) counts as 2 rows.

   "Channel Width" is swath (number of active rows times spacing between active rows).

5. In the Material Library screen, makes sure that the Material (WHEAT HRW in our example) is assigned to the Channel (Ch 1 in our example) which controls the planter's hydraulic drive.
6. Perform a Valve Calibration for the control channel.
7. Switch the seed monitor from Setup/Configuration mode to Operate mode. Load seed. Move the planter to the field.
8. Verify your planting rate per the instructions in the next topic. If the results are consistent with your setup, plant the crop.

Material	Data Required
Material Name	<crop name, such as "WHEAT HRW">
Channel	"CH 1" (typically, can be 1-4)
Type	"GRAN SEED CONTROL"
Units	<your election>
Preset Method	"Disabled" unless populations vary
Target Rate	<your election> (in "Units")
Max Rate	<110% of Target> is suggested
Min Rate	<90% of Target> is suggested
Inc/Dec	"1.0%" is suggested
Density	"1" if calibration planned, else use a value established by prior calibration
Spreader Constant	See note at left
Seeds per (unit)	<from seed supplier - used to calculate some alarms>
Low Shaft RPM	<from seed rate chart for wheel>
High Shaft RPM	<from seed rate chart for wheel>
High Pop Alarm	<"20%"> is suggested
Low Pop Alarm	<"20%"> is suggested
Prod Level Alarm	"0" (not used on YP30/40 Planter)

Channel	Data Required
CHANNEL 1	(must be channel specified above)
Type	"GRAN SEED CONTROL"
Material Name	(must be material name specified above)
Control Mode	Auto
Drive Type	PWM 1
Drive Freq.	100 Hz
Input Filter	50%
Gear Ratio	1.900
Sensor Constant	360
# Seed Rows	<based on planter model/row setup>
Channel Width	<based on planter model/row setup>
Precharge Time	0
Delay Time	0
Flush Enable	Disabled

Calibrating Volumetric Rate Spreader Constant

Calibration (which determines the Spreader Constant) is required for accurate planting of volumetric (GRAN) seed.

Volumetric seeds are planted at much higher populations than singulated seeds, and are measured in pounds or kilograms (rather than seeds) per acre or hectare. The seed tube sensors are generally not capable of counting every seed at typical volumetric rates (although they do report blockage).

For volumetric calibration, the tractor must to be hitched to the planter, and providing electrical power. Leave all hydraulic circuits in Neutral until instructed to activate the drive circuit.

1. You will need a light weight container for each row sampled, and a scale that is accurate at the expected sample weight. Great Plains recommends using enough rows and/or revolutions to generate a sample of about 10 pounds (4.5 kg), ideally:

- Use at least two rows.
- Use no fewer than 5 meter revolutions.

2. Determine the meter revolutions needed. The following equation gives the number of meter revolutions needed to meter 10 pounds. The table on page 44 provides approximate pounds (and kg) per revolution of each wheel and seed.

$$\#MeterRevs = \frac{10}{RowsSampled \times PoundsPerRev}$$

3. Configure the seed monitor for the planter and crop (material). If the seed density is not known, use 1 lb/cu-ft or 1 lb/bu.
4. Consult the rate chart for the crop. Note the allowed Meter RPM range for the intended seed wheel and planting speed (see “**Reading a Volumetric Chart**” on page 28).
5. Select the section and rows to be sampled.
6. Use the clutches to disconnect the other sections of the planter. This eliminates the need to uncouple the meters on those sections.
7. Disengage the drive couplers on all other meters on the test section, except the meters to be used for testing.

CAUTION

Planter Section Movement Hazard:
Hydraulic circuits are active for calibration. Unexpected movement of planter mainframe, sections, markers, and unexpected activation of devices connected to the auxiliary hydraulics can occur if controls are not correctly pre-set and left untouched. Keep everyone clear of planter while calibrating.

NOTICE

Population Risk:
Calibrate - Planting volumetric seed based only on chart data is risky. Your material, and your field results, can vary substantially from the test material used to generate the charts. Great Plains strongly recommends calibration.

For Example
4 containers each weighing: 8 oz.
8 oz x 4 = 32 oz

For example: planter: YP4025-3115, 15 rows
wheel: 403-118D WHEAT NARROW
crop: Hard Red Winter wheat
PoundsPerRev: 0.078
RowsSampled: 4
10 ÷ (4 x 0.078) = 32
Enter 32 for “# Meter Revs” at step 11 on page 27.

For example: target population: 110 lbs/ac
desired speed: 5 mph
METER RPM 5 rpm minimum, 35 rpm maximum
Target Meter rpm: 30

8. Raise the planter, and install the lift cylinder transport locks. Leave the tractor hydraulic system active.
9. Activate the hydraulic drive circuit. Command the planter seed monitor to:
   FILL DISK
10. Place a collection bucket under each test meter's seed tube.
11. In the Spreader Constant Calibration screen, enter the "# Meter Revs" and press the [Start] button.
12. Weigh the containers plus seed (*GrossWeight*). Subtract the empty container weights to obtain the net weight.

$$NetWeight = GrossWeight - ContainerWeight$$

13. The seed monitor assumes that all rows were tested. If you tested fewer (commonly the case), scale the sample size to planter-wide:

$$AmountDispensed = \frac{NetWeight \times RowCount}{RowsSampled}$$

14. Enter the Amount Dispensed.
    The seed monitor computes a new Spreader Constant.

Note: If the net weight of the metered sampled was dramatically different than expected, run another calibration to validate or revise the new spreader constant.

15. Re-engage couplers on disabled meters.

CAUTION

Moving Chain Hazard:
Shafts turn and chains move as soon as the [Start] softkey is pressed on the seed monitor. Set up collection containers so that they may be unattended. Keep all persons clear of the planter while calibrating.

For example: *ContainerWeight:* 2 lbs
GrossWeight: 12.88 lbs
12.88 - 2 = 10.88
NetWeight: 10.88 lbs

For example: *NetWeight:* 10.88 lbs
RowCount: 31
RowsSampled: 4
(10.88 x 31) ÷ 4 = 84.34 lbs
AmountDispensed: 84.34

Reading a Volumetric Chart

1. Using the rate range charts on pages 29-43 or 61-75, find the chart for your seed, in this example, Hard Red Winter Wheat.

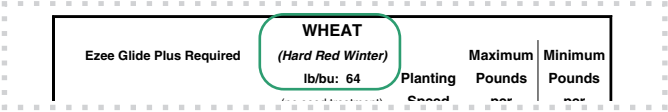

2. Find your row spacing at right side of the chart, 10 inch single row in this example.

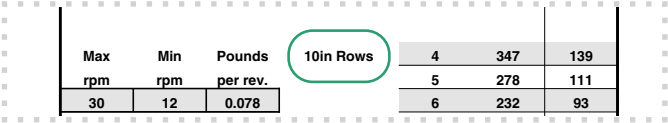

3. The speed and rate ranges are determined by allowable meter rpms. Enter the Meter RPM limits in the seed monitor to set alarms for operations that are too slow or too fast.

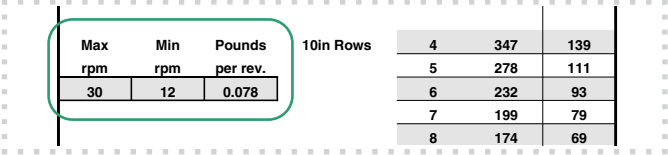

4. With your desired seed population in mind (for example, 110 pounds/ac), note at which field speeds that population remains in range. These are the ranges, in pounds per acre, within which the seed is metered accurately. In this example, speeds of 4 to 6 mph are in range for the “NARROW” wheel, and 6 to 8 mph are in range for the “WIDE” wheel. Assuming that a slower speed is desired, choose the “NARROW” wheel.

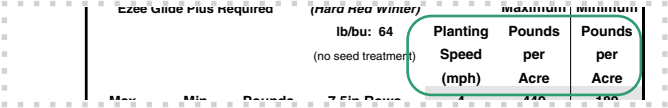

5. Verify that you have the correct seed wheel for the chart, WHEAT NARROW in this example. When ordering seed wheels, note that there are different part numbers for:
10HD/25P Series (Green wheels) and
20P Series (Black wheels).

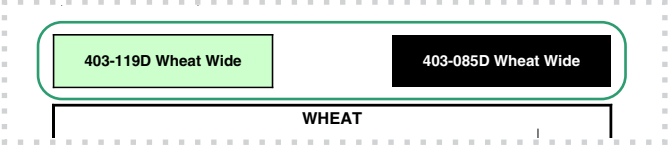

6. For Rice, note that a Flow Gate (p/n 817-529C) is required inside each seed meter. Rice seed wheels may be ordered:
as wheels only: (“D” p/n, without Flow Gate), or
as kits (“A” p/n, with Flow Gate).

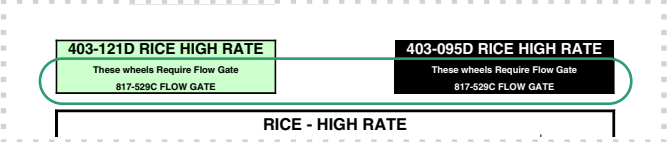

7. The tables on pages 29-43 or 61-75 are insufficient for setting the seed monitor to control the ground drive. The monitor also needs a figure for meter throughput. Running a calibration (page 26) is the easiest way to ensure that your material is accurately applied.

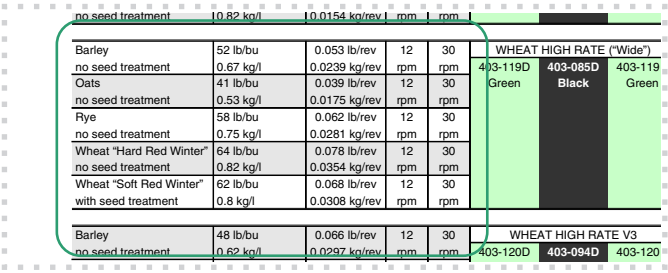

NOTICE

Population Risk:
If your desired seed rate and planting speed fall within the chart range, proceed to calibration and planting. Otherwise, you must pick another combination of seed wheel and planting speed.

NOTICE

Calibrate. Planting volumetric (“granular”) seed based only on chart data is risky. Your material can vary substantially from the test material used to generate the charts.

Volumetric Rate Range Charts

The following charts are in U.S. customary units. Metric charts begin on page 61.

Note: Ezee Glide Plus talc/graphite blend seed lubricant is mandatory for all seeds.

Barley, Wheat Narrow wheel

403-118D Wheat Narrow

403-060D Wheat Narrow

BARLEY

Ezee Glide Plus Required

lb/bu: 52

(no seed treatment)

Max rpm	Min rpm	Pounds per rev.
35	5	0.024

7.5in Rows	Planting Speed (mph)	Maximum Pounds per Acre	Minimum Pounds per Acre
	4	161	23
	5	129	18
	6	107	15
	7	92	13
	8	81	12

Max rpm	Min rpm	Pounds per rev.
35	5	0.024

10in Rows	Planting Speed (mph)	Maximum Pounds per Acre	Minimum Pounds per Acre
	4	125	18
	5	100	14
	6	83	12
	7	71	10
	8	62	9

Max rpm	Min rpm	Pounds per rev.
35	5	0.024

Twin Row 30in 15in Rows	Planting Speed (mph)	Maximum Pounds per Acre	Minimum Pounds per Acre
	4	83	12
	5	67	10
	6	55	8
	7	48	7
	8	42	6

34156

Volumetric Rate Range Charts, U.S. customary Units

Note: Ezee Glide Plus talc/graphite blend seed lubricant is mandatory for all seeds.

Barley, Wheat Wide wheel

403-119D Wheat Wide

403-085D Wheat Wide

BARLEY

Ezee Glide Plus Required

lb/bu: 52

(no seed treatment)

Max rpm	Min rpm	Pounds per rev.
30	12	0.053

7.5in Rows	Planting Speed (mph)	Maximum Pounds per Acre	Minimum Pounds per Acre
	4	303	121
	5	242	97
	6	202	81
	7	173	69
	8	151	61

Max rpm	Min rpm	Pounds per rev.
30	12	0.053

10in Rows	Planting Speed (mph)	Maximum Pounds per Acre	Minimum Pounds per Acre
	4	234	94
	5	187	75
	6	156	62
	7	134	54
	8	117	47

Max rpm	Min rpm	Pounds per rev.
30	12	0.053

Twin Row 30in 15in Rows	Planting Speed (mph)	Maximum Pounds per Acre	Minimum Pounds per Acre
	4	156	62
	5	125	50
	6	104	42
	7	89	36
	8	78	31

34157

Volumetric Rate Range Charts, U.S. customary Units

Note: Ezee Glide Plus talc/graphite blend seed lubricant is mandatory for all seeds.

Barley, V3 wheel (U.S. Customary Units)

403-120D - V3	403-094D - V3

BARLEY

Ezee Glide Plus Required			lb/bu: 48 (no seed treatment)	Planting Speed (mph)	Maximum Pounds per Acre	Minimum Pounds per Acre
Max rpm	Min rpm	Pounds per rev.	7.5in Rows	4	377	151
30	12	0.066		5	302	121
				6	251	101
				7	215	86
				8	188	75
Max rpm	Min rpm	Pounds per rev.	10in Rows	4	292	117
30	12	0.066		5	233	93
				6	195	78
				7	167	67
				8	146	58
Max rpm	Min rpm	Pounds per rev.	Twin Row 30in 15in Rows	4	195	78
30	12	0.066		5	156	62
				6	130	52
				7	111	44
				8	97	39

34158

Volumetric Rate Range Charts, U.S. customary Units

Note: Ezee Glide Plus talc/graphite blend seed lubricant is mandatory for all seeds.

Oats, Wheat Narrow wheel

403-118D Wheat Narrow

403-060D Wheat Narrow

OATS

Ezee Glide Plus Required			lb/bu: 41 (no seed treatment)	Planting Speed (mph)	Maximum Pounds per Acre	Minimum Pounds per Acre
Max rpm	Min rpm	Pounds per rev.	7.5in Rows	4	107	15
35	5	0.016		5	86	12
				6	72	10
				7	61	9
				8	54	8
Max rpm	Min rpm	Pounds per rev.	10in Rows	4	83	12
35	5	0.016		5	67	10
				6	55	8
				7	48	7
				8	42	6
Max rpm	Min rpm	Pounds per rev.	Twin Row 30in 15in Rows	4	55	8
35	5	0.016		5	44	6
				6	37	5
				7	32	5
				8	28	4

34159

Volumetric Rate Range Charts, U.S. customary Units

Note: Ezee Glide Plus talc/graphite blend seed lubricant is mandatory for all seeds.

Oats, Wheat Wide wheel

403-119D Wheat Wide

403-085D Wheat Wide

OATS

Ezee Glide Plus Required			lb/bu: 41 (no seed treatment)	Planting Speed (mph)	Maximum Pounds per Acre	Minimum Pounds per Acre
Max rpm	Min rpm	Pounds per rev.	7.5in Rows	4	222	89
30	12	0.039		5	178	71
				6	148	59
				7	127	51
				8	111	44
Max rpm	Min rpm	Pounds per rev.	10in Rows	4	172	69
30	12	0.039		5	138	55
				6	115	46
				7	98	39
				8	86	34
Max rpm	Min rpm	Pounds per rev.	Twin Row 30in 15in Rows	4	115	46
30	12	0.039		5	92	37
				6	76	31
				7	66	26
				8	57	23

34160

Volumetric Rate Range Charts, U.S. customary Units

Note: Ezee Glide Plus talc/graphite blend seed lubricant is mandatory for all seeds.

Oats, V3 wheel

403-120D - V3

403-094D - V3

OATS

Ezee Glide Plus Required — **lb/bu: 38.5** (no seed treatment)

Max rpm	Min rpm	Pounds per rev.
30	12	0.062

Planting Speed (mph)	Maximum Pounds per Acre	Minimum Pounds per Acre
7.5in Rows		
4	357	143
5	285	114
6	238	95
7	204	82
8	178	71
10in Rows		
4	276	110
5	221	88
6	184	74
7	158	63
8	138	55
Twin Row 30in 15in Rows		
4	184	74
5	147	59
6	123	49
7	105	42
8	92	37

34161

Volumetric Rate Range Charts, U.S. customary Units

Note: Ezee Glide Plus talc/graphite blend seed lubricant is mandatory for all seeds.

Rice, Low Rate (U.S. Customary Units)

403-426D RICE LOW RATE
These wheels Require Flow Gate
817-529C FLOW GATE

403-425D RICE LOW RATE
These wheels Require Flow Gate
817-529C FLOW GATE

RICE - LOW RATE

Ezee Glide Plus Required			CLXL8 Seeds/Pound-21855 (w / seed treatment)	Planting Speed (mph)	Maximum Pounds per Acre	Minimum Pounds per Acre
Max rpm	Min rpm	Pounds per rev.	7.5in Rows	4	79	39
30	15	0.014		5	63	32
				6	53	26
				7	45	23
				8	39	20
Max rpm	Min rpm	Pounds per rev.	10in Rows	4	61	31
30	15	0.014		5	49	24
				6	41	20
				7	35	17
				8	31	15
Max rpm	Min rpm	Pounds per rev.	Twin Row 30in 15in Rows	4	41	20
30	15	0.014		5	33	16
				6	27	14
				7	23	12
				8	20	10

34162

Volumetric Rate Range Charts, U.S. customary Units

Note: Ezee Glide Plus talc/graphite blend seed lubricant is mandatory for all seeds.

Rice, Medium Rate

403-143D RICE MED RATE
These wheels Require Flow Gate
817-529C FLOW GATE

403-142D RICE MED RATE
These wheels Require Flow Gate
817-529C FLOW GATE

RICE - MEDIUM RATE

Ezee Glide Plus Required — Clearfield 161 Seeds/Pound-20900 (w / seed treatment)

Max rpm	Min rpm	Pounds per rev.
30	15	0.026

	Planting Speed (mph)	Maximum Pounds per Acre	Minimum Pounds per Acre
7.5in Rows	4	150	75
	5	120	60
	6	100	50
	7	85	43
	8	75	37

Max rpm	Min rpm	Pounds per rev.
30	15	0.026

	Planting Speed (mph)	Maximum Pounds per Acre	Minimum Pounds per Acre
10in Rows	4	116	58
	5	93	46
	6	77	39
	7	66	33
	8	58	29

Max rpm	Min rpm	Pounds per rev.
30	15	0.026

	Planting Speed (mph)	Maximum Pounds per Acre	Minimum Pounds per Acre
Twin Row 30in 15in Rows	4	77	39
	5	62	31
	6	51	26
	7	44	22
	8	39	19

34163

Volumetric Rate Range Charts, U.S. customary Units

Note: Ezee Glide Plus talc/graphite blend seed lubricant is mandatory for all seeds.

Rice, High Rate

403-121D RICE HIGH RATE

These wheels Require Flow Gate

817-529C FLOW GATE

403-095D RICE HIGH RATE

These wheels Require Flow Gate

817-529C FLOW GATE

RICE - HIGH RATE

Ezee Glide Plus Required (Cypress) lb/bu: 45 (no seed treatment)

Max rpm	Min rpm	Pounds per rev.		Planting Speed (mph)	Maximum Pounds per Acre	Minimum Pounds per Acre
			7.5in Rows	4	253	127
				5	203	101
30	15	0.044		6	169	84
				7	145	72
				8	127	63
			10in Rows	4	196	98
				5	157	78
30	15	0.044		6	131	65
				7	112	56
				8	98	49
			Twin Row 30in 15in Rows	4	131	65
				5	105	52
30	15	0.044		6	87	44
				7	75	37
				8	65	33

34164

Volumetric Rate Range Charts, U.S. customary Units

Note: Ezee Glide Plus talc/graphite blend seed lubricant is mandatory for all seeds.

Rye, Wheat Narrow wheel

403-118D Wheat Narrow

403-060D Wheat Narrow

RYE

Ezee Glide Plus Required

lb/bu: 58

(no seed treatment)

Max rpm	Min rpm	Pounds per rev.
35	5	0.028

7.5in Rows	Planting Speed (mph)	Maximum Pounds per Acre	Minimum Pounds per Acre
	4	188	27
	5	150	21
	6	125	18
	7	107	15
	8	94	13

Max rpm	Min rpm	Pounds per rev.
35	5	0.028

10in Rows	Planting Speed (mph)	Maximum Pounds per Acre	Minimum Pounds per Acre
	4	146	21
	5	116	17
	6	97	14
	7	83	12
	8	73	10

Max rpm	Min rpm	Pounds per rev.
35	5	0.028

Twin Row 30in 15in Rows	Planting Speed (mph)	Maximum Pounds per Acre	Minimum Pounds per Acre
	4	97	14
	5	78	11
	6	65	9
	7	55	8
	8	49	7

34165

Volumetric Rate Range Charts, U.S. customary Units

Note: Ezee Glide Plus talc/graphite blend seed lubricant is mandatory for all seeds.

Rye, Wheat Wide wheel

403-119D Wheat Wide

403-085D Wheat Wide

RYE

Ezee Glide Plus Required			lb/bu: 58 (no seed treatment)	Planting Speed (mph)	Maximum Pounds per Acre	Minimum Pounds per Acre
Max rpm	Min rpm	Pounds per rev.	7.5in Rows	4	357	143
30	12	0.062		5	285	114
				6	238	95
				7	204	82
				8	178	71
Max rpm	Min rpm	Pounds per rev.	10in Rows	4	276	110
30	12	0.062		5	221	88
				6	184	74
				7	158	63
				8	138	55
Max rpm	Min rpm	Pounds per rev.	Twin Row 30in 15in Rows	4	184	74
30	12	0.062		5	147	59
				6	123	49
				7	105	42
				8	92	37

34166

Volumetric Rate Range Charts, U.S. customary Units

Note: Ezee Glide Plus talc/graphite blend seed lubricant is mandatory for all seeds.

Wheat, Hard Red Winter, Narrow wheel

403-118D Wheat Narrow

403-060D Wheat Narrow

WHEAT

Ezee Glide Plus Required

Max rpm	Min rpm	Pounds per rev.
35	5	0.034

(Hard Red Winter)

lb/bu: 64

(no seed treatment)

	Planting Speed (mph)	Maximum Pounds per Acre	Minimum Pounds per Acre
7.5in Rows	4	228	33
	5	183	26
	6	152	22
	7	130	19
	8	114	16
10in Rows	4	177	25
	5	141	20
	6	118	17
	7	101	14
	8	88	13
Twin Row 30in 15in Rows	4	118	17
	5	94	13
	6	79	11
	7	67	10
	8	59	8

34167

Volumetric Rate Range Charts, U.S. customary Units

Note: Ezee Glide Plus talc/graphite blend seed lubricant is mandatory for all seeds.

Wheat, Hard Red Winter, Wide wheel

403-119D Wheat Wide

403-085D Wheat Wide

WHEAT

Ezee Glide Plus Required			*(Hard Red Winter)* lb/bu: 64 (no seed treatment)	Planting Speed (mph)	Maximum Pounds per Acre	Minimum Pounds per Acre
Max rpm	Min rpm	Pounds per rev.	7.5in Rows	4	449	180
30	12	0.078		5	359	144
				6	299	120
				7	256	103
				8	224	90
Max rpm	Min rpm	Pounds per rev.	10in Rows	4	347	139
30	12	0.078		5	278	111
				6	232	93
				7	199	79
				8	174	69
Max rpm	Min rpm	Pounds per rev.	Twin Row 30in 15in Rows	4	232	93
30	12	0.078		5	185	74
				6	154	62
				7	132	53
				8	116	46

34168

Volumetric Rate Range Charts, U.S. customary Units

Note: Ezee Glide Plus talc/graphite blend seed lubricant is mandatory for all seeds.

Wheat, Soft Red Winter, Wide wheel

403-119D Wheat Wide

403-085D Wheat Wide

WHEAT

Ezee Glide Plus Required			*(Soft Red Winter)* lb/bu: 62 (w / seed treatment)	Planting Speed (mph)	Maximum Pounds per Acre	Minimum Pounds per Acre
Max rpm	Min rpm	Pounds per rev.	7.5in Rows	4	391	157
30	12	0.068		5	313	125
				6	261	104
				7	224	89
				8	196	78
Max rpm	Min rpm	Pounds per rev.	10in Rows	4	303	121
30	12	0.068		5	242	97
				6	202	81
				7	173	69
				8	151	61
Max rpm	Min rpm	Pounds per rev.	Twin Row 30in 15in Rows	4	202	81
30	12	0.068		5	162	65
				6	135	54
				7	115	46
				8	101	40

34169

Volumetric Rate Range Charts, U.S. customary Units

Note: Ezee Glide Plus talc/graphite blend seed lubricant is mandatory for all seeds.

Wheat, Soft Red Winter, V3 wheel

403-120D - V3

403-094D - V3

WHEAT

Ezee Glide Plus Required			*(Soft Red Winter)* lb/bu: 62 (w / seed treatment)	Planting Speed (mph)	Maximum Pounds per Acre	Minimum Pounds per Acre
Max rpm	Min rpm	Pounds per rev.	7.5in Rows	4	521	209
30	12	0.091		5	417	167
				6	348	139
				7	298	119
				8	261	104
Max rpm	Min rpm	Pounds per rev.	10in Rows	4	404	161
30	12	0.091		5	323	129
				6	269	108
				7	231	92
				8	202	81
Max rpm	Min rpm	Pounds per rev.	Twin Row 30in 15in Rows	4	269	108
30	12	0.091		5	215	86
				6	179	72
				7	154	62
				8	135	54

34170

Singulator Plus Volumetric Seed Wheel Data

Singulator Plus Volumetric Seed Wheels — **YP40 Planter**

Crop	Density	Weight per Rev.	Min. RPM	Max. RPM	Part Number 10HDP	Part Number 20P	Part Number 25P
					WHEAT ("Narrow")		
Barley no seed treatment	52 lb/bu 0.67 kg/l	0.024 lb/rev 0.0109 kg/rev	5 rpm	35 rpm	403-118D Green	**403-060D** **Black**	403-118D Green
Oats no seed treatment	41 lb/bu 0.53 kg/l	0.016 lb/rev 0.0073 kg/rev	5 rpm	35 rpm			
Rye no seed treatment	58 lb/bu 0.75 kg/l	0.028 lb/rev 0.0127 kg/rev	5 rpm	35 rpm			
Wheat "Hard Red Winter" no seed treatment	64 lb/bu 0.82 kg/l	0.034 lb/rev 0.0154 kg/rev	5 rpm	35 rpm			
					WHEAT HIGH RATE ("Wide")		
Barley no seed treatment	52 lb/bu 0.67 kg/l	0.053 lb/rev 0.0239 kg/rev	12 rpm	30 rpm	403-119D Green	**403-085D** **Black**	403-119D Green
Oats no seed treatment	41 lb/bu 0.53 kg/l	0.039 lb/rev 0.0175 kg/rev	12 rpm	30 rpm			
Rye no seed treatment	58 lb/bu 0.75 kg/l	0.062 lb/rev 0.0281 kg/rev	12 rpm	30 rpm			
Wheat "Hard Red Winter" no seed treatment	64 lb/bu 0.82 kg/l	0.078 lb/rev 0.0354 kg/rev	12 rpm	30 rpm			
Wheat "Soft Red Winter" with seed treatment	62 lb/bu 0.8 kg/l	0.068 lb/rev 0.0308 kg/rev	12 rpm	30 rpm			
					WHEAT HIGH RATE V3		
Barley no seed treatment	48 lb/bu 0.62 kg/l	0.066 lb/rev 0.0297 kg/rev	12 rpm	30 rpm	403-120D Green	**403-094D** **Black**	403-120D Green
Oats no seed treatment	38.5 lb/bu 0.5 kg/l	0.053 lb/rev 0.0238 kg/rev	12 rpm	30 rpm			
Wheat "Soft Red Winter" with seed treatment	62 lb/bu 0.8 kg/l	0.091 lb/rev 0.0411 kg/rev	12 rpm	30 rpm			
*Includes required 817-529C Flow Gate					RICE LOW RATE		
Rice, CLXL8	21855 seeds/lb 48200 seeds/kg	0.014 lb/rev 0.0062 kg/rev	15 rpm	30 rpm	403-248A* 403-426D	**403-249A*** **403-425D**	403-248A* 403-426D
*Includes required 817-529C Flow Gate					RICE MED RATE		
Rice, Clearfield 161	20900 seeds/lb 46100 seeds/kg	0.026 lb/rev 0.0118 kg/rev	15 rpm	30 rpm	403-127A* 403-143D	**403-126A*** **403-142D**	403-127A* 403-143D
* Includes required 817-529C Flow Gate					RICE HIGH RATE		
Rice, Cypress no seed treatment	45 lb/bu 0.58 kg/l	0.044 lb/rev 0.02 kg/rev	15 rpm	30 rpm	403-128A* 403-121D	**403-111A*** **403-095D**	403-128A* 403-121D

31278B

Fertilizer Rate

The YP30/40 Planter planter optionally includes one or two fertilizer manifolds:
Type 2 - single section, single inlet, and/or
Type 3 - three section, three inlet
and may include one ground-driven pump for the Type 2 manifold.

The Type 2 manifold may be supplied by tanks on the planter, or tanks off the planter, typically a semi-mounted trailing tank cart or the 400 gallon tank on a trailing PFC2000 tank cart.

The Type 3 manifold is designed to use an off-planter pump and tank, typically the PFC1600 or PFC2000 tank cart.

Fertilizer rate is independent of seed rate. Fertilizer rates are set by the pump system(s). On-planter ground drive pump operations are described on page 49 and in the YP30/40 Planter Operator Manual. Off-planter pump operations are described in the tank manual.

Manifold systems include orifice plates at each row unit drop line. Each fertilizer system normally includes a pressure relief valve and strainer. These components affect consistency of flow across all rows.

Note: Great Plains recommends checking with your local Agronomist as soil conditions vary. Soil conditions in your area may need lesser or more amounts of fertilizer than represented in these charts. Do not exceed 12 gallons/ac (112 liters/Ha) in any case.

29352	Type 2: Planter Tanks	Type 2: Gravity Cart[a] Tank	Type 3: Pumped Cart[a] Tank
Source	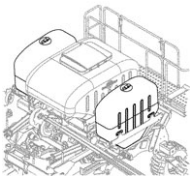	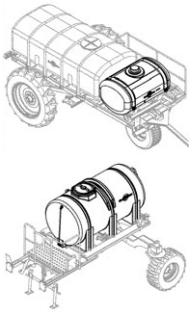	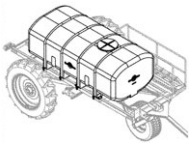
Pump	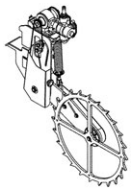	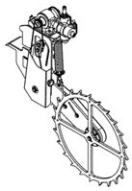	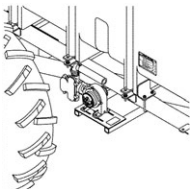
Manifold	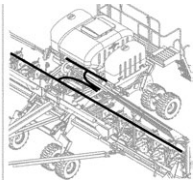	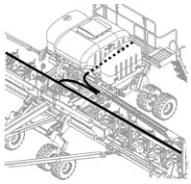	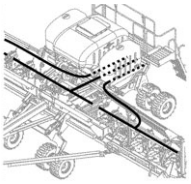

a Do not use nurse tank sizes above 550 gallons with planter model YP30.

Fertilizer Rate Steps

1. Determine rate desired.
2. Determine orifice plate size (page 46).
3. Install orifice plates (page 47).
4. Shut off any unused rows (page 47).
5. Check strainer mesh size (page 48).
6. Set relief valve (page 48).
7. Determine pump range and rate setting (page 49).

Orifice Plate Selection

Refer to Figure 12

Orifice plates ① at each drop line nozzle provide back-pressure that balances flow in the manifolds, assuring that each row obtains the same flow rate. For a given rate, there may be more than one orifice size that provides the recommended back-pressure.

Plates are provided with the system(s) in three sizes. Additional sizes are available.

In general, the orifice ① needs to be small enough to create a minimum pressure in the manifold but large enough to prevent the manifold pressure from exceeding the maximum:
15psi min., 15-40 optimal, 65 psi max.

Using an orifice size too large can result in unequal flow at rows. Using a size too small can cause excess back-pressure resulting in material dumping at the relief valve.

Determine Orifice Size

The chart below. shows rate ranges for each Great Plains orifice size and row spacing. You may need to change to the next higher or lower orifice for a different fertilizer solution density and/or a different ground speed.

To reduce orifice plugging and pump wear, use the largest orifice practical for your fertilizer application rate.

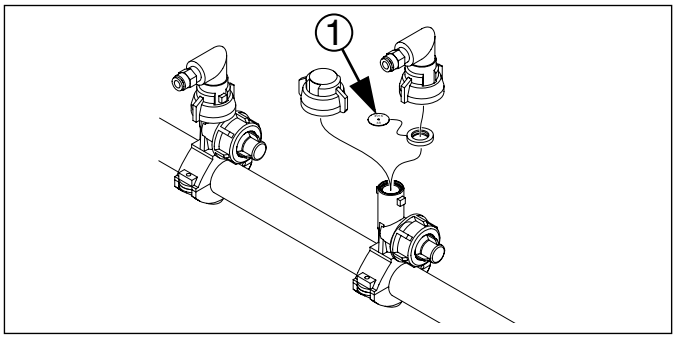

Figure 12
Fertilizer Orifice Plate

29984

⚠ DANGER

Agricultural Chemical Hazard:
Wear protective gloves when changing orifice plates. Consult material manufacturer or supplier documents for proper handling and steps to take if skin contact occurs.

NOTICE

Material Loss/Equipment Damage Risk:
Set application rate at pump using pump drive chart., not by orifice size. Orifice size is only used to create 15-65 PSI back pressure to provide even flow between rows. An orifice size too small causes material loss at relief valve. A size too large can cause application imbalance across the planter.

Orifice Plate Size	20	25	34	40	50	60	65
Nozzle Spacing	**Recommended Rate Range in Gallons per Acre. Range is 15 - 40 PSI** (Values based on: 5.0 mph, 10.7 lbs/gallon Fertilizer solution density)						
6 inch single	5.6 - 9.1	11 - 17	16 - 26	31 - 50	46 - 76	85 - 139	134 - 219
7.5 inch single	4.5 - 7.3	8.4 - 14	13 - 21	25 - 40	37 - 61	68 - 111	107 - 175
8 inch single	4.2 - 6.8	7.9 - 13	12 - 19	23 - 38	35 - 57	64 - 104	101 - 164
9.5 inch single	3.5 - 5.8	6.6 - 11	10 - 16	19 - 32	29 - 48	54 - 88	85 - 138
10 inch single	3.4 - 5.5	6.3 - 10	9.5 - 15	18 - 30	28 - 46	51 - 83	80 - 131
13.8in (35cm, 70TR)	2.4 - 4.0	4.6 - 7.5	6.9 - 11	13 - 22	20 - 33	37 - 61	58 - 95
14.8in (38cm, 75TR)	2.3 - 3.7	4.3 - 7.0	6.4 - 10	12 - 20	19 - 31	35 - 56	55 - 89
15in single (30TR)	2.2 - 3.6	4.2 - 6.9	6.3 - 10	12 - 20	19 - 30	34 - 56	54 - 88
18in (36in Twin Row)	1.9 - 3.0	3.5 - 5.7	5.3 - 8.6	10 - 17	15 - 25	28 - 46	45 - 73
19in (38in Twin Row)	1.8 - 2.9	3.3 - 5.4	5.0 - 8.1	9.7 - 16	15 - 24	27 - 44	42 - 69
20 inch single	1.7 - 2.7	3.2 - 5.2	4.7 - 7.7	9.2 - 15	14 - 23	26 - 42	40 - 66
27.6in (70cm single)	1.2 - 2.0	2.3 - 3.7	3.4 - 5.6	6.7 - 11	10 - 17	19 - 30	29 - 48
29.5in (75cm single)	1.1 - 1.9	2.1 - 3.5	3.2 - 5.2	6.2 - 10	9 - 15	17 - 28	27 - 45
30 inch single	1.1 - 1.8	2.1 - 3.4	3.2 - 5.2	6.1 - 10	9.3 - 15	17 - 28	27 - 44
36 inch single	0.9 - 1.5	1.8 - 2.9	2.6 - 4.3	5.1 - 8.4	7.7 - 13	14 - 23	22 - 37
38 inch single	0.9 - 1.4	1.7 - 2.7	2.5 - 4.1	4.8 - 7.9	7.3 - 12	13 - 22	21 - 35
40 inch single	0.8 - 1.4	1.6 - 2.6	2.4 - 3.9	4.6 - 7.5	7.0 - 11	13 - 21	20 - 33

* These sizes standard in most Great Plains fertilizer systems.

31014

Install Orifice Plates

Refer to Figure 13

Insert the plate inside the gasket ② supplied with the nozzle ③. Insert the gasketed plate with the legend side facing out the nozzle outlet (typically up).

In general, the orifice ① needs to be small enough to create enough pressure in the manifold to operate the check valves ④ in the boom clamps, but not so much that the system dumps product at the boom relief valve.

The recommend operating pressure is: 15 to 40 psi

Using an orifice size too large can result in unequal flow at rows, intermittent flow, and flow stoppage at rows where pressure falls below the 8 psi required to open the clamp check valve. Using a size too small can cause excess back-pressure resulting in material dumping at the boom relief valve.

Use the same size at all active rows.

Row Shutoff

Refer to Figure 13

Unused drop lines may be shut off by replacing the nozzle ③ with a Great Plains 832-042C cap ⑤. Twin row boom systems separately include caps for half the rows.

When installing a cap:

- It is not necessary to remove the gasketed orifice plate from inside the clamp. The cap includes its own gasket that seals at the end of the clamp port.
- Use a tie wrap or other line to secure the loose nozzle and drop line tubing to the boom.
- Adjust pump and/or orifice plates for new rate and row spacing.

NOTICE

Mis-Application or Material Loss Risk:
Do not apply materials after row shut-off or row turn-on without first reviewing setup. Merely changing the number of active rows does not change the application rate. If pump and/or orifice size changes are not also made, pressures could be too low or too high.

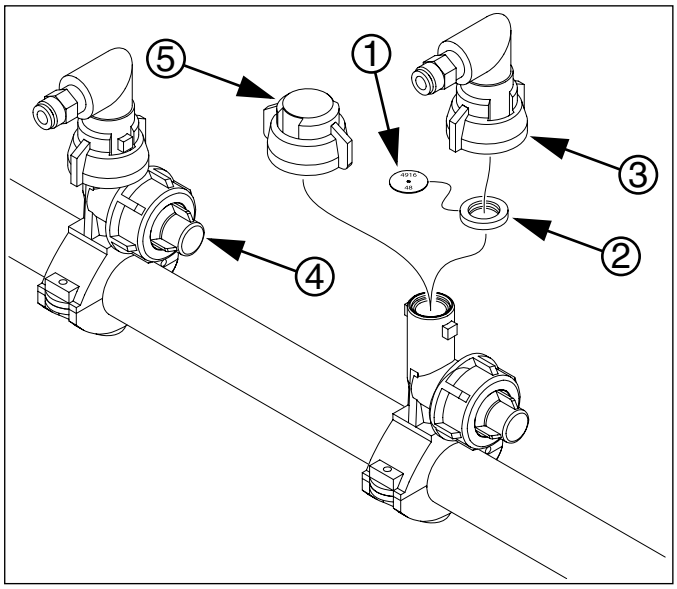

Figure 13 29984
Fertilizer Orifice Plate

Note: Replacement nozzles include gaskets. Gaskets may also be ordered separately as Great Plains part number CP18999-EPR.

DANGER

Agricultural Chemical Hazard:
Wear protective gloves when changing orifice plates and strainer screens. Consult material manufacturer or supplier documents for proper handling and steps to take if skin contact occurs.

Orifice Size	Part Number	Port Diameter	Port Area
20	832-052C	0.020 in	0.20 mm²
28*	832-056C	0.028 in	0.40 mm²
34*	832-053C	0.034 in	0.59 mm²
48*	832-054C	0.048 in	1.17 mm²
59	832-057C	0.059 in	1.76 mm²
80	832-055C	0.080 in	3.24 mm²
98	832-059C	0.098 in	4.87 mm²

* Sizes standard in many fertilizer bundles. Check your accessories before ordering. 29993

Strainer

Refer to Figure 14

A Banjo brand strainer is supplied with the ground drive fertilizer pump. It is plumbed before the Hypro pump. The standard 80 mesh screen ① should be suitable for most applications. Other screen sizes are available from Banjo Corporation.

DANGER

Wear protective gloves when changing screens.

If changing screen sizes, keep in mind the following.

- A smaller mesh (100) will keep very small manifold orifice plates from plugging so often. However, the screen will have to be cleaned more often.
- A larger mesh (50) or (30) will pass more material but should only be considered when using large manifold orifice plates.
- A plugged or partially plugged screen will starve the pump resulting in a reduced application rate.
- Mesh sizes: (Smallest) 100, 80, 50, 30 (Largest)

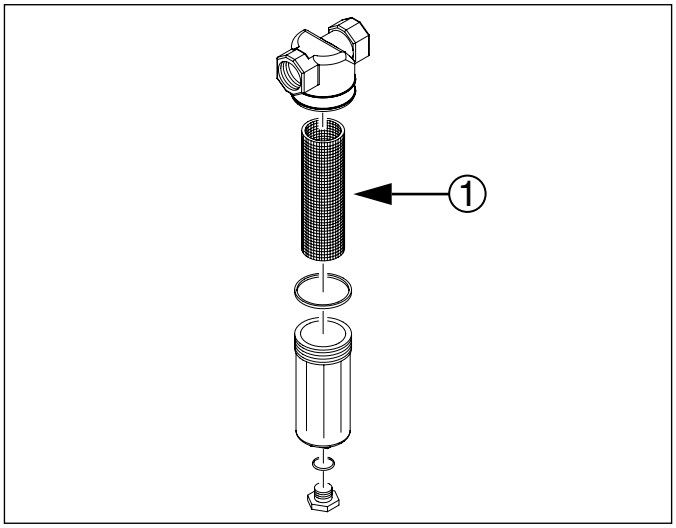

Figure 14
Strainer

18418

Setting Relief Valve

A relief valve is plumbed after the pump outlet to protect the manifold and pump from excessive pressure. Any product that dumps over the relief valve will discharge from the dump line ②.

To set relief valve:

Refer to Figure 15

1. Unlock plastic jam nut ③ from relief valve knob ④.
2. Unscrew knob clockwise until it loses contact with internal spring.
3. Screw knob counterclockwise two turns. Start at this setting.
4. Observe manifold gauge ⑤. Watch for relief valve discharge ② while operating in the field.
5. If valve is dumping product and gauge reads under 65 psi, stop tractor and turn knob clockwise (looking down) $\frac{1}{4}$ turn. Continue operating at normal field speed. Repeat this step as needed until no product is discharged from relief valve.
6. If pressure gauge reads above 65 psi, change to a larger orifice. Go to step 2. Repeat steps.

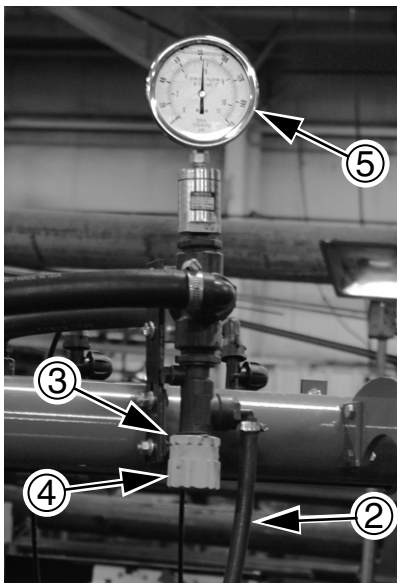

Figure 15
Pressure Relief Valve

28029

Ground Drive Fertilizer Rate

One JohnBlue ground drive pump ① customarily supplies a Type 2 boom on the planter.

NOTICE

Equipment Damage Risk:
Contact wheel and chain system operate whenever the planter is lowered and in motion. If planting without fertilizing, the pump must not be allowed to run dry. Disconnect chain or remove sprocket.

Refer to Figure 16 and Figure 17

Coarse rate is set by a single "driving" sprocket ② on the ground drive assembly. Fine rate is set on a dial (setting hub) ③ at the pump, using a tool supplied with the pump.

Rate settings may be established in any of three ways:

- the table on the next page,
- the slide chart provided with the pump, or;
- a calculator on the JohnBlue internet web site (www.cds-johnblue.com)

1. Check plumbing setup. See "**Setting Relief Valve**" and "**Strainer**" in the Operator Manual.
2. Determine Driving sprocket (15T or 47T) required from table, slide chart or web calculator. If this sprocket is already installed on driven shaft, skip to step 7. Otherwise, to change sprocket, continue with step 3.
3. Remove knob ④ and guard ⑤. Loosen idler ⑥, and remove chain ⑦ from lower jackshaft ②.
4. Select the new sprocket from the storage shaft ⑧. Remove the pins, and exchange sprockets. Store the previous sprocket on the storage shaft.
5. Remount the chain ⑦. Re-engage idler ⑥, tightening so that the longest span of the chain has ¼in (6mm) of slack.
6. Remount guard ⑤ and secure with knob ④.
7. Using the box-wrench end of the JohnBlue 115681-01 tool, loosen the setting pointer nut ⑨.
8. Use the other end of the tool to rotate the dial ③ to the setting determined by table, slide chart or web.
9. Re-tighten pointer nut.

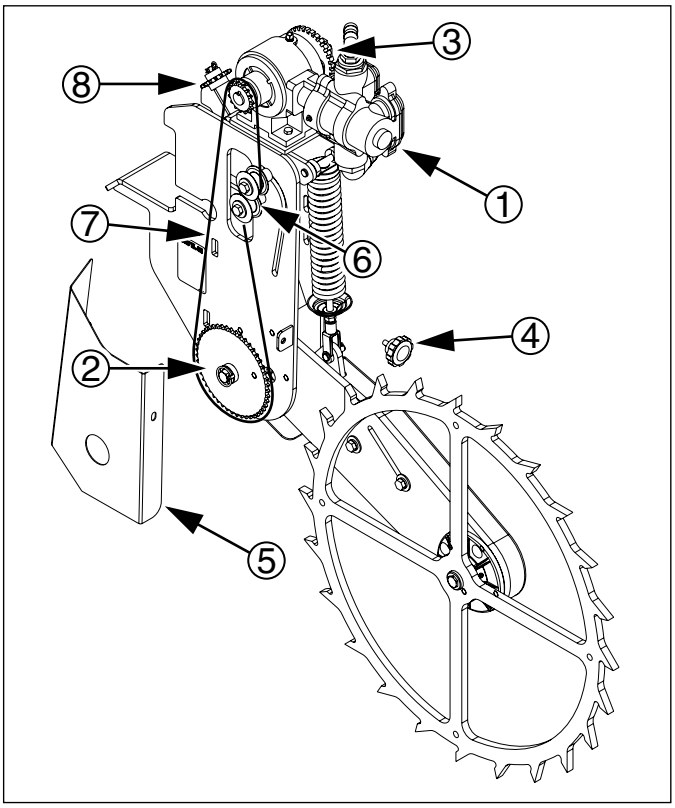

Figure 16
John Blue Pump
28416

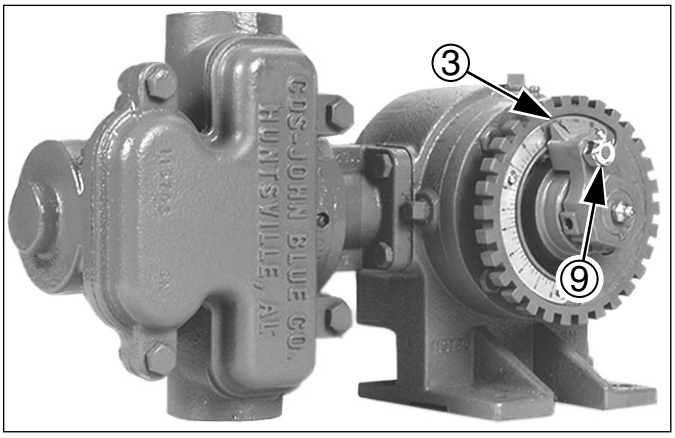

Figure 17
Pump Dial
26155

YP30 CDS-John Blue Fertilizer Rates

This table is in U.S. customary units, and is based on a nominal 360in swath. Use the slide chart or internet calculator for more precise rate setting.

Gallons per Acre	Driving Sprocket 15	Driving Sprocket 47	Liters per Hectare
	Dial Setting		
3	2.4		28
4	3.2		37
5	4.0		47
6	4.8		56
7	5.7		65
8	6.5	2.1	75
9	7.3	2.3	84
10	8.1	2.6	94
11	8.9	2.8	103
12	9.7	3.1	112
13		3.4	122
14		3.6	131
15		3.9	140
16		4.1	150
17		4.4	159
18		4.6	168
19		4.9	178
20		5.2	187
21		5.4	196
22		5.7	206
23		5.9	215
24		6.2	224
25		6.4	234
26		6.7	243
27		7.0	253
28		7.2	262
29		7.5	271
30		7.7	281
31		8.0	290
32		8.3	299
33		8.5	309
34		8.8	318
35		9.0	327
36		9.3	337
37		9.5	346
38		9.8	355

31447

YP30 JohnBlue Reference Data

Use the data below with the CDS-John Blue 115797-01 slide chart or with the CDS-John Blue internet calculator.

(When ordering the slide chart use the envelope number 115698-91.)

Pump Type	(•) Piston Pump NGP-6050 Series	
Data Preference	(•) <user-specified>	
Application Rate	<user-specified>	
Drive System	(•) Ground Drive Loaded Radius: 17.55in (44.58cm)	
Swath Width	YP3025-1270	840cm (331in)
	YP3025-1230	330in
	YP3025-16TR36	288in
	YP3025-1820	360in
	YP3025-2315	345in
	YP3025-2335	840cm (331in)
	YP3025-24TR70	840cm (331in)
	YP3025-2415 YP3025-24TR30	360in
	YP3010HDP-3610 YP3020P-3610	360in
	YP3010HDP-4475	360in

Drive	**Driven**
(Required): 25	(Required): 15
(Optional): 15 or 47	(Optional): 15
(Optional): __	(Optional): __
(Optional): __	(Optional): __
Sprocket Ratio (for slide chart)	Driving 15T: 1.67 Driving 47T: 5.22
Ground Speed	5 mph[a] / 8 kph

a Gallons per acre is independent of speed between 2 mph and 8 mph (3-13 kph). See advisory below.

NOTICE

Equipment Damage Risk:
Plant at or below 8 mph (13 kph) with the 47T Driving sprocket installed. The pump is rated for 450 rpm maximum, which is exceeded at and above 9 mph (14 kph).

YP40A CDS-John Blue Fertilizer Rates

This table is in U.S. customary units, and is based on an average 465in swath. Use the slide chart or internet calculator for more precise rate setting.

Gallons per Acre	Driving Sprocket 15	Driving Sprocket 47	Liters per Hectare
	Dial Setting		
2	2.1		19
3	3.2		28
4	4.3		37
5	5.3		47
6	6.4	2.0	56
7	7.5	2.4	65
8	8.5	2.7	75
9	9.6	3.1	84
10		3.4	94
11		3.7	103
12		4.1	112
13		4.4	122
14		4.8	131
15		5.1	140
16		5.4	150
17		5.8	159
18		6.1	168
19		6.5	178
20		6.8	187
21		7.1	196
22		7.5	206
23		7.8	215
24		8.2	224
25		8.5	234
26		8.8	243
27		9.2	253
28		9.5	262
29		9.9	271
30			281

29812

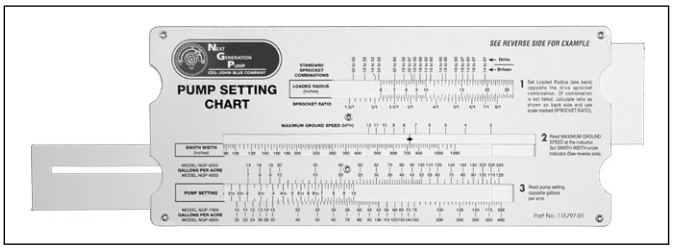

Figure 18
JohnBlue Slide Chart

26156

YP40A JohnBlue Reference Data

Use the data below with the CDS-John Blue 115797-01 slide chart or with the CDS-John Blue. internet calculator.

Pump Type	(•) Piston Pump NGP-6050 Series	
Data Preference	(•) <user-specified>	
Application Rate	<user-specified>	
Drive System	(•) Ground Drive Loaded Radius: 17.55in (44.58cm)	
Swath Width	YP4025-1670 YP4025F-1670	1120cm (441in)
	YP4025-1630	480in
	YP4025-2420	480in
	YP4025-3115	465in
	YP4025-3135	1085cm (427in)
	YP4025-32TR70	1120cm (441in)
	YP4025-3215 YP4025-32TR	480in
	YP4010HDP-4810 YP4020P-4810 YP4025-4810	480in
	YP4020P-5808	472in
	YP4020P-6275	473in

Drive		**Driven**	
(Required):	25	(Required):	15
(Optional):	15 or 47	(Optional):	15
(Optional):	__	(Optional):	__
(Optional):	__	(Optional):	__
Sprocket Ratio (for slide chart)		Driving 15T:	1.67
		Driving 47T:	5.22
Ground Speed		5 mph[a] / 8 kph	

a Gallons per acre is independent of speed between 2 mph and 8 mph (3-13 kph). See advisory below.

NOTICE

Equipment Damage Risk:
Plant at or below 8 mph (13 kph) with the 47T Driving sprocket installed. The pump is rated for 450 rpm maximum, which is exceeded at and above 9 mph (14 kph).

Appendix A - Seed Lubricants

Seed Lubricants

29248

25477

Singulator Plus Meters (all seeds)

Ezee Glide Plus Talc-Graphite Mix

821-069C bucket, 5 gallon (19 liter)

Ezee Glide Plus Lubricant
To maximize performance of Great Plains metering systems, it is imperative to use only “Ezee Glide Plus” lubricant.“Ezee Glide Plus” Talc-Graphite lubricant is mandatory for all seeds, especially treated or inoculated seed. ***Thorough mixing of seed and added lubricant is required.***

Recommended usage:

For clean seeds other than milo and cotton sprinkle one cup of Ezee Glide Plus Talc per 4 bushels or units (170 ml per 100 liters) of seed.

For milo and cotton double the application to one cup (or more) per 2 bu or units (335 ml per 100 liters) of seed.

NOTICE

Adjust this rate as necessary so all seeds become coated while avoiding an accumulation of lubricant in the bottom of the hopper.

For seed with excessive treatment, or for humid planting environments, increase the rate as needed for smooth meter operation.

⚠ CAUTION

Irritation and Chronic Exposure Hazard:
Wear gloves. DO NOT use hands or any part of your body to mix seed lubricant. Wear a respirator when transferring and mixing. Avoid breathing lubricant dust. Not an acute hazard. May cause mechanical eye or skin irritation in high concentrations. As with all mineral spills, minimize dusting during clean-up. Prolonged inhalation may cause lung injury. Product can become slippery when wet.

Finger Pickup Meters

EZ-Slide Graphite Powder

821-042C bottle, 1 pound (450 grams)
821-060C jug, 5 pound (2.3 kg)

For Finger Pick Up Meters Only
Use only approved Graphite Powder available from Great Plains Mfg. Inc. or Precision Planting to ensure proper lubrication of finger pickup corn seed meters.

Recommended usage:

For finger pickup meters, add one tablespoon (15 ml) of graphite for each unit of seed corn (80,000 kernels).

In high humidity conditions, or seeds with heavy seed treatments, increase the application to two tbsp (30ml).

If delivery of seed from the hopper to the finger meter is an issue, add “Ezee Glide Plus” talc and graphite blend at a rate of one cup (237ml) per 4 units of seed. Adjust until issue is resolved.

⚠ CAUTION

Irritation and Chronic Exposure Hazard:
Wear gloves. DO NOT use hands or any part of your body to mix seed lubricant. Wear a respirator when transferring and mixing. Avoid breathing lubricant dust. Not an acute hazard. May cause mechanical eye or skin irritation in high concentrations. As with all mineral spills, minimize dusting during clean-up. Prolonged inhalation may cause lung injury.

Appendix B - Metric Charts

Precision Planting, Metric Furrow Check

For instructions, or sample data in U.S. customary units, see page 4.

Rows to Sample		Length of Row to Count for:	
Row Spacing	Rows to Count	1/1000th ha	1/200th ha
7.5in (19.1cm)	4	13.12m	65.62m
8in (20.3cm)	4	12.3m	61.52m
10in (25.4cm)	3	13.12m	65.62m
35cm (13.8in)	2	14.29m	71.43m
15in (38.1cm)	2	13.12m	65.62m
20in (50.8cm)	1	19.69m	98.43m
70cm (27.6in)	1 *	14.29m	71.43m
30in (76.2cm)	1 *	13.12m	65.62m

* Twin rows count as 1 row . Sample both rows of a twin pair.

Singulated Spacing: Metric Units

Applies Singulator Plus wheel, and finger pickup meters.
For U.S. customary units, see page 5.

Plant Population Seeds/Hectare	Row Spacing	
	70cm Twin 35cm Single	70cm Single
	Seed Spacing	
34 594	82.6 cm	41.3 cm
37 064	77.1 cm	38.5 cm
39 535	72.3 cm	36.1 cm
42 006	68.0 cm	34.0 cm
44 477	64.2 cm	32.1 cm
46 948	60.9 cm	30.4 cm
49 419	57.8 cm	28.9 cm
51 890	55.1 cm	27.5 cm
54 361	52.6 cm	26.3 cm
56 832	50.3 cm	25.1 cm
59 303	48.2 cm	24.1 cm
61 774	46.2 cm	23.1 cm
64 245	44.5 cm	22.2 cm
66 716	42.8 cm	21.4 cm
69 187	41.3 cm	20.6 cm
71 658	39.9 cm	19.9 cm
74 129	38.5 cm	19.3 cm
76 600	37.3 cm	18.6 cm
79 071	36.1 cm	18.1 cm
81 542	35.0 cm	17.5 cm
84 013	34.0 cm	17.0 cm
86 484	33.0 cm	16.5 cm
88 955	32.1 cm	16.1 cm
91 426	31.2 cm	15.6 cm
93 897	30.4 cm	15.2 cm
96 368	29.6 cm	14.8 cm
98 839	28.9 cm	14.5 cm
101 310	28.2 cm	14.1 cm
103 781	27.5 cm	13.8 cm
106 252	26.9 cm	13.4 cm
108 723	26.3 cm	13.1 cm
111 193	25.7 cm	12.8 cm
113 664	25.1 cm	12.6 cm
116 135	24.6 cm	12.3 cm
118 606	24.1 cm	12.0 cm
121 077	23.6 cm	11.8 cm

Plant Population Seeds/Hectare	Row Spacing	
	70cm Twin 35cm Single	70cm Single
	Seed Spacing	
123 548	23.1 cm	11.6 cm
135 903	21.0 cm	10.5 cm
148 258	19.3 cm	9.6 cm
160 613	17.8 cm	8.9 cm
172 968	16.5 cm	8.3 cm
185 322	15.4 cm	7.7 cm
197 677	14.5 cm	7.2 cm
210 032	13.6 cm	6.8 cm
222 387	12.8 cm	6.4 cm
234 742	12.2 cm	6.1 cm
247 097	11.6 cm	5.8 cm
259 451	11.0 cm	5.5 cm
271 806	10.5 cm	5.3 cm
284 161	10.1 cm	5.0 cm
296 516	9.6 cm	4.8 cm
308 871	9.2 cm	4.6 cm
321 226	8.9 cm	4.4 cm
333 580	8.6 cm	4.3 cm
345 935	8.3 cm	4.1 cm
358 290	8.0 cm	4.0 cm
370 645	7.7 cm	3.9 cm
383 000	7.5 cm	3.7 cm
395 355	7.2 cm	3.6 cm
407 709	7.0 cm	3.5 cm
420 064	6.8 cm	3.4 cm
432 419	6.6 cm	3.3 cm
444 774	6.4 cm	3.2 cm
457 129	6.2 cm	3.1 cm
469 484	6.1 cm	3.0 cm
481 838	5.9 cm	3.0 cm
494 193	5.8 cm	2.9 cm
555 967	5.1 cm	2.6 cm
617 742	4.6 cm	2.3 cm
679 516	4.2 cm	2.1 cm
741 290	3.9 cm	1.9 cm

31278D

Cotton, 120 Cell, Metric

Chart in U.S. Customary units is on page 8.

Singulator Plus™ RPM Limits

(Black Wheels)

403-078D	8800-10100 seeds/kg
403-077D	10100-11450 seeds/kg
403-076D	11450-13200 seeds/kg

Cotton 120 Cell Wheel

Ezee Glide Plus Required

(Green Wheels)

403-133D	8800-10100 seeds/kg
403-134D	10100-11450 seeds/kg
403-135D	11450-13200 seeds/kg

		Planting Speed (kph)	Maximum Population (seeds/ha)	Minimum Population (seeds/ha)
25.4cm Rows		**6.4**	**968 718**	**220 163**
		8.0	**774 974**	**176 130**
Max	Min	**8.9**	**704 522**	**160 119**
rpm	rpm	**9.7**	**645 812**	**146 775**
22	**5**	**10.5**	**596 134**	**135 485**
		11.3	**553 553**	**125 807**
Twin Row 70cm		**6.4**	**702 478**	**159 654**
35cm Rows		**8.0**	**561 983**	**127 723**
Max	Min	**8.9**	**510 893**	**116 112**
rpm	rpm	**9.7**	**468 319**	**106 436**
22	**5**	**10.5**	**432 294**	**98 249**
		11.3	**401 416**	**91 231**
Twin Row 76.2cm		**6.4**	**645 812**	**146 775**
38.1cm Rows		**8.0**	**516 649**	**117 420**
Max	Min	**8.9**	**469 681**	**106 746**
rpm	rpm	**9.7**	**430 541**	**97 850**
22	**5**	**10.5**	**397 423**	**90 323**
		11.3	**369 035**	**83 872**
Twin Row 91.4cm		**6.4**	**538 176**	**122 313**
		8.0	**430 541**	**97 850**
Max	Min	**8.9**	**391 401**	**88 955**
rpm	rpm	**9.7**	**358 784**	**81 542**
22	**5**	**10.5**	**331 185**	**75 269**
		11.3	**307 529**	**69 893**
Twin Row 96.5cm		**6.4**	**509 851**	**115 875**
		8.0	**407 881**	**92 700**
Max	Min	**8.9**	**370 801**	**84 273**
rpm	rpm	**9.7**	**339 901**	**77 250**
22	**5**	**10.5**	**313 755**	**71 308**
		11.3	**291 344**	**66 214**
Twin Row 101.6cm		**6.4**	**484 359**	**110 082**
50.8cm Rows		**8.0**	**387 487**	**88 065**
Max	Min	**8.9**	**352 261**	**80 059**
rpm	rpm	**9.7**	**322 906**	**73 388**
22	**5**	**10.5**	**298 067**	**67 742**
		11.3	**276 776**	**62 904**

		Planting Speed (kph)	Maximum Population (seeds/ha)	Minimum Population (seeds/ha)
55.9cm Rows		**6.4**	**440 326**	**100 074**
		8.0	**352 261**	**80 059**
Max	Min	**8.9**	**320 237**	**72 781**
rpm	rpm	**9.7**	**293 551**	**66 716**
22	**5**	**10.5**	**270 970**	**61 584**
		11.3	**251 615**	**57 185**
70cm Rows		**6.4**	**351 239**	**79 827**
		8.0	**280 991**	**63 862**
Max	Min	**8.9**	**255 447**	**58 056**
rpm	rpm	**9.7**	**234 159**	**53 218**
22	**5**	**10.5**	**216 147**	**49 124**
		11.3	**200 708**	**45 615**
76.2cm Rows		**6.4**	**322 906**	**73 388**
		8.0	**258 325**	**58 710**
Max	Min	**8.9**	**234 841**	**53 373**
rpm	rpm	**9.7**	**215 271**	**48 925**
22	**5**	**10.5**	**198 711**	**45 162**
		11.3	**184 518**	**41 936**
91.4cm Rows		**6.4**	**269 088**	**61 156**
		8.0	**215 271**	**48 925**
Max	Min	**8.9**	**195 701**	**44 477**
rpm	rpm	**9.7**	**179 392**	**40 771**
22	**5**	**10.5**	**165 593**	**37 635**
		11.3	**153 765**	**34 947**
96.5cm Rows		**6.4**	**254 926**	**57 938**
		8.0	**203 941**	**46 350**
Max	Min	**8.9**	**185 400**	**42 136**
rpm	rpm	**9.7**	**169 950**	**38 625**
22	**5**	**10.5**	**156 877**	**35 654**
		11.3	**145 672**	**33 107**
101.6cm Rows		**6.4**	**242 179**	**55 041**
		8.0	**193 744**	**44 033**
Max	Min	**8.9**	**176 130**	**40 030**
rpm	rpm	**9.7**	**161 453**	**36 694**
22	**5**	**10.5**	**149 033**	**33 871**
		11.3	**138 388**	**31 452**

34249L

Milo, 102 Cell, Metric

Chart in U.S. Customary units is on page 9.

Singulator Plus™ RPM Limits (Black Wheels)

Milo 102 Cell Wheel

Ezee Glide Plus Required (Green Wheels)

403-093D 23100-39700 seeds/kg

		Planting Speed (kph)	Maximum Population (seeds/ha)	Minimum Population (seeds/ha)
25.4cm Rows		**6.4**	**748 554**	**187 139**
		8.0	**598 844**	**149 711**
Max	Min	**8.9**	**544 403**	**136 101**
rpm	rpm	**9.7**	**499 036**	**124 759**
20	**5**	**10.5**	**460 649**	**115 162**
		11.3	**427 745**	**106 936**
Twin Row 70cm		**6.4**	**542 824**	**135 706**
35cm Rows		**8.0**	**434 259**	**108 565**
Max	Min	**8.9**	**394 781**	**98 695**
rpm	rpm	**9.7**	**361 883**	**90 471**
20	**5**	**10.5**	**334 046**	**83 511**
		11.3	**310 185**	**77 546**
Twin Row 76.2cm		**6.4**	**499 036**	**124 759**
38.1cm Rows		**8.0**	**399 229**	**99 807**
Max	Min	**8.9**	**362 936**	**90 734**
rpm	rpm	**9.7**	**332 691**	**83 173**
20	**5**	**10.5**	**307 099**	**76 775**
		11.3	**285 164**	**71 291**
Twin Row 91.4cm		**6.4**	**415 864**	**103 966**
		8.0	**332 691**	**83 173**
Max	Min	**8.9**	**302 446**	**75 612**
rpm	rpm	**9.7**	**277 242**	**69 311**
20	**5**	**10.5**	**255 916**	**63 979**
		11.3	**237 636**	**59 409**
Twin Row 96.5cm		**6.4**	**393 976**	**98 494**
		8.0	**315 181**	**78 795**
Max	Min	**8.9**	**286 528**	**71 632**
rpm	rpm	**9.7**	**262 651**	**65 663**
20	**5**	**10.5**	**242 447**	**60 612**
		11.3	**225 129**	**56 282**
Twin Row 101.6cm		**6.4**	**374 277**	**93 569**
50.8cm Rows		**8.0**	**299 422**	**74 855**
Max	Min	**8.9**	**272 202**	**68 050**
rpm	rpm	**9.7**	**249 518**	**62 380**
20	**5**	**10.5**	**230 324**	**57 581**
		11.3	**213 873**	**53 468**

403-137D 23100-39700 seeds/kg

		Planting Speed (kph)	Maximum Population (seeds/ha)	Minimum Population (seeds/ha)
55.9cm Rows		**6.4**	**340 252**	**85 063**
		8.0	**272 202**	**68 050**
Max	Min	**8.9**	**247 456**	**61 864**
rpm	rpm	**9.7**	**226 835**	**56 709**
20	**5**	**10.5**	**209 386**	**52 346**
		11.3	**194 430**	**48 607**
70cm Rows		**6.4**	**271 412**	**67 853**
		8.0	**217 130**	**54 282**
Max	Min	**8.9**	**197 391**	**49 348**
rpm	rpm	**9.7**	**180 941**	**45 235**
20	**5**	**10.5**	**167 023**	**41 756**
		11.3	**155 093**	**38 773**
76.2cm Rows		**6.4**	**249 518**	**62 380**
		8.0	**199 615**	**49 904**
Max	Min	**8.9**	**181 468**	**45 367**
rpm	rpm	**9.7**	**166 345**	**41 586**
20	**5**	**10.5**	**153 550**	**38 387**
		11.3	**142 582**	**35 645**
91.4cm Rows		**6.4**	**207 932**	**51 983**
		8.0	**166 345**	**41 586**
Max	Min	**8.9**	**151 223**	**37 806**
rpm	rpm	**9.7**	**138 621**	**34 655**
20	**5**	**10.5**	**127 958**	**31 990**
		11.3	**118 818**	**29 705**
96.5cm Rows		**6.4**	**196 988**	**49 247**
		8.0	**157 590**	**39 398**
Max	Min	**8.9**	**143 264**	**35 816**
rpm	rpm	**9.7**	**131 325**	**32 831**
20	**5**	**10.5**	**121 223**	**30 306**
		11.3	**112 565**	**28 141**
101.6cm Rows		**6.4**	**187 139**	**46 785**
		8.0	**149 711**	**37 428**
Max	Min	**8.9**	**136 101**	**34 025**
rpm	rpm	**9.7**	**124 759**	**31 190**
20	**5**	**10.5**	**115 162**	**28 791**
		11.3	**106 936**	**26 734**

34249M

Milo, 135 Cell, Metric

Chart in U.S. Customary units is on page 10.

Singulator Plus™ RPM Limits

(Black Wheels)

403-081D	26400-39700 seeds/kg
403-090D	23100-30800 seeds/kg

Milo 135 Cell Wheel

Ezee Glide Plus Required

(Green Wheels)

403-140D	26400-39700 seeds/kg
403-138D	23100-30800 seeds/kg

		Planting Speed (kph)	Maximum Population (seeds/ha)	Minimum Population (seeds/ha)
25.4cm Rows		**6.4**	**990 734**	**247 683**
		8.0	**792 587**	**198 147**
Max rpm	Min rpm	**8.9**	**720 534**	**180 133**
		9.7	**660 489**	**165 122**
20	**5**	**10.5**	**609 682**	**152 421**
		11.3	**566 134**	**141 533**
Twin Row 70cm 35cm Rows		**6.4**	**718 444**	**179 611**
		8.0	**574 755**	**143 689**
Max rpm	Min rpm	**8.9**	**522 505**	**130 626**
		9.7	**478 962**	**119 741**
20	**5**	**10.5**	**442 119**	**110 530**
		11.3	**410 539**	**102 635**
Twin Row 76.2cm 38.1cm Rows		**6.4**	**660 489**	**165 122**
		8.0	**528 391**	**132 098**
Max rpm	Min rpm	**8.9**	**480 356**	**120 089**
		9.7	**440 326**	**110 082**
20	**5**	**10.5**	**406 455**	**101 614**
		11.3	**377 422**	**94 356**
Twin Row 91.4cm		**6.4**	**550 408**	**137 602**
		8.0	**440 326**	**110 082**
Max rpm	Min rpm	**8.9**	**400 297**	**100 074**
		9.7	**366 938**	**91 735**
20	**5**	**10.5**	**338 712**	**84 678**
		11.3	**314 519**	**78 630**
Twin Row 96.5cm		**6.4**	**521 439**	**130 360**
		8.0	**417 151**	**104 288**
Max rpm	Min rpm	**8.9**	**379 228**	**94 807**
		9.7	**347 626**	**86 906**
20	**5**	**10.5**	**320 885**	**80 221**
		11.3	**297 965**	**74 491**
Twin Row 101.6cm 50.8cm Rows		**6.4**	**495 367**	**123 842**
		8.0	**396 294**	**99 073**
Max rpm	Min rpm	**8.9**	**360 267**	**90 067**
		9.7	**330 245**	**82 561**
20	**5**	**10.5**	**304 841**	**76 210**
		11.3	**283 067**	**70 767**

		Planting Speed (kph)	Maximum Population (seeds/ha)	Minimum Population (seeds/ha)
55.9cm Rows		**6.4**	**450 334**	**112 583**
		8.0	**360 267**	**90 067**
Max rpm	Min rpm	**8.9**	**327 515**	**81 879**
		9.7	**300 222**	**75 056**
20	**5**	**10.5**	**277 128**	**69 282**
		11.3	**257 333**	**64 333**
70cm Rows		**6.4**	**359 222**	**89 805**
		8.0	**287 377**	**71 844**
Max rpm	Min rpm	**8.9**	**261 252**	**65 313**
		9.7	**239 481**	**59 870**
20	**5**	**10.5**	**221 060**	**55 265**
		11.3	**205 270**	**51 317**
76.2cm Rows		**6.4**	**330 245**	**82 561**
		8.0	**264 196**	**66 049**
Max rpm	Min rpm	**8.9**	**240 178**	**60 044**
		9.7	**220 163**	**55 041**
20	**5**	**10.5**	**203 227**	**50 807**
		11.3	**188 711**	**47 178**
91.4cm Rows		**6.4**	**275 204**	**68 801**
		8.0	**220 163**	**55 041**
Max rpm	Min rpm	**8.9**	**200 148**	**50 037**
		9.7	**183 469**	**45 867**
20	**5**	**10.5**	**169 356**	**42 339**
		11.3	**157 259**	**39 315**
96.5cm Rows		**6.4**	**260 719**	**65 180**
		8.0	**208 576**	**52 144**
Max rpm	Min rpm	**8.9**	**189 614**	**47 404**
		9.7	**173 813**	**43 453**
20	**5**	**10.5**	**160 443**	**40 111**
		11.3	**148 983**	**37 246**
101.6cm Rows		**6.4**	**247 683**	**61 921**
		8.0	**198 147**	**49 537**
Max rpm	Min rpm	**8.9**	**180 133**	**45 033**
		9.7	**165 122**	**41 281**
20	**5**	**10.5**	**152 421**	**38 105**
		11.3	**141 533**	**35 383**

34249N

Milo, 270 Cell, Metric

Chart in U.S. Customary units is on page 11.

Singulator Plus™ RPM Limits

(Black Wheels)

403-082D	26400-39700 seeds/kg
403-091D	23100-30800 seeds/kg

Milo 270 Cell Wheel

Ezee Glide Plus Required

(Green Wheels)

403-141D	26400-39700 seeds/kg
403-139D	23100-30800 seeds/kg

		Planting Speed (kph)	Maximum Population (seeds/ha)	Minimum Population (seeds/ha)
25.4cm Rows		6.4	1 981 468	495 367
		8.0	1 585 174	396 294
Max rpm 20	Min rpm 5	8.9	1 441 067	360 267
		9.7	1 320 979	330 245
		10.5	1 219 365	304 841
		11.3	1 132 267	283 067
Twin Row 70cm 35cm Rows		6.4	1 436 887	359 222
		8.0	1 149 510	287 377
Max rpm 20	Min rpm 5	8.9	1 045 009	261 252
		9.7	957 925	239 481
		10.5	884 238	221 060
		11.3	821 079	205 270
Twin Row 76.2cm 38.1cm Rows		6.4	1 320 979	330 245
		8.0	1 056 783	264 196
Max rpm 20	Min rpm 5	8.9	960 712	240 178
		9.7	880 652	220 163
		10.5	812 910	203 227
		11.3	754 845	188 711
Twin Row 91.4cm		6.4	1 100 815	275 204
		8.0	880 652	220 163
Max rpm 20	Min rpm 5	8.9	800 593	200 148
		9.7	733 877	183 469
		10.5	677 425	169 356
		11.3	629 037	157 259
Twin Row 96.5cm		6.4	1 042 878	260 719
		8.0	834 302	208 576
Max rpm 20	Min rpm 5	8.9	758 457	189 614
		9.7	695 252	173 813
		10.5	641 771	160 443
		11.3	595 930	148 983
Twin Row 101.6cm 50.8cm Rows		6.4	990 734	247 683
		8.0	792 587	198 147
Max rpm 20	Min rpm 5	8.9	720 534	180 133
		9.7	660 489	165 122
		10.5	609 682	152 421
		11.3	566 134	141 533

		Planting Speed (kph)	Maximum Population (seeds/ha)	Minimum Population (seeds/ha)
55.9cm Rows		6.4	900 667	225 167
		8.0	720 534	180 133
Max rpm 20	Min rpm 5	8.9	655 031	163 758
		9.7	600 445	150 111
		10.5	554 257	138 564
		11.3	514 667	128 667
70cm Rows		6.4	718 444	179 611
		8.0	574 755	143 689
Max rpm 20	Min rpm 5	8.9	522 505	130 626
		9.7	478 962	119 741
		10.5	442 119	110 530
		11.3	410 539	102 635
76.2cm Rows		6.4	660 489	165 122
		8.0	528 391	132 098
Max rpm 20	Min rpm 5	8.9	480 356	120 089
		9.7	440 326	110 082
		10.5	406 455	101 614
		11.3	377 422	94 356
91.4cm Rows		6.4	550 408	137 602
		8.0	440 326	110 082
Max rpm 20	Min rpm 5	8.9	400 297	100 074
		9.7	366 938	91 735
		10.5	338 712	84 678
		11.3	314 519	78 630
96.5cm Rows		6.4	521 439	130 360
		8.0	417 151	104 288
Max rpm 20	Min rpm 5	8.9	379 228	94 807
		9.7	347 626	86 906
		10.5	320 885	80 221
		11.3	297 965	74 491
101.6cm Rows		6.4	495 367	123 842
		8.0	396 294	99 073
Max rpm 20	Min rpm 5	8.9	360 267	90 067
		9.7	330 245	82 561
		10.5	304 841	76 210
		11.3	283 067	70 767

34249P

Soybeans, 100 Cell, Metric

Chart in U.S. Customary units is on page 12.

Singulator Plus™ RPM Limits (Black Wheels)

Soybean 100 Cell Wheel

Ezee Glide Plus Required (Green Wheels)

403-071D 3750-4850 seeds/kg

		Planting Speed (kph)	Maximum Population (seeds/ha)	Minimum Population (seeds/ha)
25.4cm Rows		6.4	1 210 897	183 469
		8.0	968 718	146 775
Max rpm	Min rpm	8.9	880 652	133 432
		9.7	807 265	122 313
33	5	10.5	745 167	112 904
		11.3	691 941	104 840
Twin Row 70cm 35cm Rows		6.4	878 098	133 045
		8.0	702 478	106 436
Max rpm	Min rpm	8.9	638 617	96 760
		9.7	585 399	88 697
33	5	10.5	540 368	81 874
		11.3	501 770	76 026
Twin Row 76.2cm 38.1cm Rows		6.4	807 265	122 313
		8.0	645 812	97 850
Max rpm	Min rpm	8.9	587 102	88 955
		9.7	538 176	81 542
33	5	10.5	496 778	75 269
		11.3	461 294	69 893
Twin Row 91.4cm		6.4	672 721	101 927
		8.0	538 176	81 542
Max rpm	Min rpm	8.9	489 251	74 129
		9.7	448 480	67 952
33	5	10.5	413 982	62 725
		11.3	384 412	58 244
Twin Row 96.5cm		6.4	637 314	96 563
		8.0	509 851	77 250
Max rpm	Min rpm	8.9	463 501	70 227
		9.7	424 876	64 375
33	5	10.5	392 193	59 423
		11.3	364 180	55 179
Twin Row 101.6cm 50.8cm Rows		6.4	605 448	91 735
		8.0	484 359	73 388
Max rpm	Min rpm	8.9	440 326	66 716
		9.7	403 632	61 156
33	5	10.5	372 584	56 452
		11.3	345 971	52 420

403-122D 3750-4850 seeds/kg

		Planting Speed (kph)	Maximum Population (seeds/ha)	Minimum Population (seeds/ha)
55.9cm Rows		6.4	550 408	83 395
		8.0	440 326	66 716
Max rpm	Min rpm	8.9	400 297	60 651
		9.7	366 938	55 597
33	5	10.5	338 712	51 320
		11.3	314 519	47 654
70cm Rows		6.4	439 049	66 523
		8.0	351 239	53 218
Max rpm	Min rpm	8.9	319 308	48 380
		9.7	292 699	44 348
33	5	10.5	270 184	40 937
		11.3	250 885	38 013
76.2cm Rows		6.4	403 632	61 156
		8.0	322 906	48 925
Max rpm	Min rpm	8.9	293 551	44 477
		9.7	269 088	40 771
33	5	10.5	248 389	37 635
		11.3	230 647	34 947
91.4cm Rows		6.4	336 360	50 964
		8.0	269 088	40 771
Max rpm	Min rpm	8.9	244 626	37 064
		9.7	224 240	33 976
33	5	10.5	206 991	31 362
		11.3	192 206	29 122
96.5cm Rows		6.4	318 657	48 281
		8.0	254 926	38 625
Max rpm	Min rpm	8.9	231 751	35 114
		9.7	212 438	32 188
33	5	10.5	196 097	29 712
		11.3	182 090	27 589
101.6cm Rows		6.4	302 724	45 867
		8.0	242 179	36 694
Max rpm	Min rpm	8.9	220 163	33 358
		9.7	201 816	30 578
33	5	10.5	186 292	28 226
		11.3	172 985	26 210

34249Q

Soybeans, 110 Cell, Metric

Chart in U.S. Customary units is on page 13.

Singulator Plus™ RPM Limits (Black Wheels)

403-070D	4850-5950 seeds/kg
403-061D	5950-7050 seeds/kg
403-066D	6800-8400 seeds/kg
403-068D	7950-8800 seeds/kg

Soybean 110 Cell Wheel

Ezee Glide Plus Required (Green Wheels)

403-123D	4850-5950 seeds/kg
403-124D	5950-7050 seeds/kg
403-125D	6800-8400 seeds/kg
403-126D	7950-8800 seeds/kg

		Planting Speed (kph)	Maximum Population (seeds/ha)	Minimum Population (seeds/ha)
25.4cm Rows		6.4	1 493 440	201 816
		8.0	1 194 752	161 453
Max rpm 37	Min rpm 5	8.9	1 086 138	146 775
		9.7	995 626	134 544
		10.5	919 040	124 195
		11.3	853 394	115 324
Twin Row 70cm 35cm Rows		6.4	1 082 987	146 350
		8.0	866 390	117 080
Max rpm 37	Min rpm 5	8.9	787 627	106 436
		9.7	721 992	97 566
		10.5	666 454	90 061
		11.3	618 850	83 628
Twin Row 76.2cm 38.1cm Rows		6.4	995 626	134 544
		8.0	796 501	107 635
Max rpm 37	Min rpm 5	8.9	724 092	97 850
		9.7	663 751	89 696
		10.5	612 693	82 796
		11.3	568 929	76 882
Twin Row 91.4cm		6.4	829 689	112 120
		8.0	663 751	89 696
Max rpm 37	Min rpm 5	8.9	603 410	81 542
		9.7	553 126	74 747
		10.5	510 578	68 997
		11.3	474 108	64 069
Twin Row 96.5cm		6.4	786 021	106 219
		8.0	628 817	84 975
Max rpm 37	Min rpm 5	8.9	571 652	77 250
		9.7	524 014	70 813
		10.5	483 705	65 366
		11.3	449 155	60 697
Twin Row 101.6cm 50.8cm Rows		6.4	746 720	100 908
		8.0	597 376	80 726
Max rpm 37	Min rpm 5	8.9	543 069	73 388
		9.7	497 813	67 272
		10.5	459 520	62 097
		11.3	426 697	57 662

		Planting Speed (kph)	Maximum Population (seeds/ha)	Minimum Population (seeds/ha)
55.9cm Rows		6.4	678 836	91 735
		8.0	543 069	73 388
Max rpm 37	Min rpm 5	8.9	493 699	66 716
		9.7	452 557	61 156
		10.5	417 745	56 452
		11.3	387 906	52 420
70cm Rows		6.4	541 494	73 175
		8.0	433 195	58 540
Max rpm 37	Min rpm 5	8.9	393 814	53 218
		9.7	360 996	48 783
		10.5	333 227	45 031
		11.3	309 425	41 814
76.2cm Rows		6.4	497 813	67 272
		8.0	398 251	53 818
Max rpm 37	Min rpm 5	8.9	362 046	48 925
		9.7	331 875	44 848
		10.5	306 347	41 398
		11.3	284 465	38 441
91.4cm Rows		6.4	414 844	56 060
		8.0	331 875	44 848
Max rpm 37	Min rpm 5	8.9	301 705	40 771
		9.7	276 563	37 373
		10.5	255 289	34 498
		11.3	237 054	32 034
96.5cm Rows		6.4	393 010	53 110
		8.0	314 408	42 488
Max rpm 37	Min rpm 5	8.9	285 826	38 625
		9.7	262 007	35 406
		10.5	241 853	32 683
		11.3	224 577	30 348
101.6cm Rows		6.4	373 360	50 454
		8.0	298 688	40 363
Max rpm 37	Min rpm 5	8.9	271 534	36 694
		9.7	248 907	33 636
		10.5	229 760	31 049
		11.3	213 349	28 831

34249R

Volumetric Rate Range Charts, Metric Units

Volumetric charts in U.S. customary units begin on page 29.

Note: Ezee Glide Plus talc/graphite blend seed lubricant is mandatory for all seeds.

Barley, Wheat Narrow wheel

403-118D Wheat Narrow

403-060D Wheat Narrow

BARLEY

Ezee Glide Plus Required			kg / liter 0.6682 (no seed treatment)	Planting Speed (kph)	Maximum Kilograms per Hectare	Minimum Kilograms per Hectare
Max rpm	Min rpm	Kilograms per rev.	19.1cm Rows	6.4	181	26
				8.0	144	21
35	5	0.011		9.7	120	17
				11.3	103	15
				12.9	90	13
Max rpm	Min rpm	Kilograms per rev.	25.4cm Rows	6.4	140	20
				8.0	112	16
35	5	0.011		9.7	93	13
				11.3	80	11
				12.9	70	10
Max. rpm	Min rpm	Kilograms per rev.	Twin Row 70cm 35cm Rows	6.4	101	14
				8.0	81	12
35	5	0.011		9.7	68	10
				11.3	58	8
				12.9	51	7
Max rpm	Min rpm	Kilograms per rev.	Twin Row 76.2cm 38.1cm Rows	6.4	93	13
				8.0	75	11
35	5	0.011		9.7	62	9
				11.3	53	8
				12.9	47	7

34171

Volumetric Rate Range Charts, Metric Units

Note: Ezee Glide Plus talc/graphite blend seed lubricant is mandatory for all seeds.

Barley, Wheat Wide wheel

403-119D Wheat Wide

403-085D Wheat Wide

BARLEY

Ezee Glide Plus Required			kg / liter 0.6682 (no seed treatment)	Planting Speed (kph)	Maximum Kilograms per Hectare	Minimum Kilograms per Hectare
Max rpm	Min rpm	Kilograms per rev.	19.1cm Rows	6.4	339	136
				8.0	271	109
30	12	0.024		9.7	226	90
				11.3	194	78
				12.9	170	68
Max rpm	Min rpm	Kilograms per rev.	25.4cm Rows	6.4	263	105
				8.0	210	84
30	12	0.024		9.7	175	70
				11.3	150	60
				12.9	131	53
Max. rpm	Min rpm	Kilograms per rev.	Twin Row 70cm 35cm Rows	6.4	191	76
				8.0	153	61
30	12	0.024		9.7	127	51
				11.3	109	44
				12.9	95	38
Max rpm	Min rpm	Kilograms per rev.	Twin Row 76.2cm 38.1cm Rows	6.4	175	70
				8.0	140	56
30	12	0.024		9.7	117	47
				11.3	100	40
				12.9	88	35

34172

Volumetric Rate Range Charts, Metric Units

Note: Ezee Glide Plus talc/graphite blend seed lubricant is mandatory for all seeds.

Barley, V3 wheel

403-120D - V3 | **403-094D - V3**

BARLEY

Ezee Glide Plus Required			kg / liter 0.6168 (no seed treatment)	Planting Speed (kph)	Maximum Kilograms per Hectare	Minimum Kilograms per Hectare
Max rpm	Min rpm	Kilograms per rev.	19.1cm Rows	6.4	423	169
				8.0	338	135
30	12	0.030		9.7	282	113
				11.3	241	97
				12.9	211	85
Max rpm	Min rpm	Kilograms per rev.	25.4cm Rows	6.4	327	131
				8.0	262	105
30	12	0.030		9.7	218	87
				11.3	187	75
				12.9	164	65
Max. rpm	Min rpm	Kilograms per rev.	Twin Row 70cm 35cm Rows	6.4	237	95
				8.0	190	76
30	12	0.030		9.7	158	63
				11.3	136	54
				12.9	119	47
Max rpm	Min rpm	Kilograms per rev.	Twin Row 76.2cm 38.1cm Rows	6.4	218	87
				8.0	174	70
30	12	0.030		9.7	145	58
				11.3	125	50
				12.9	109	44

34173

Volumetric Rate Range Charts, Metric Units

Note: Ezee Glide Plus talc/graphite blend seed lubricant is mandatory for all seeds.

Oats, Wheat Narrow wheel

403-118D Wheat Narrow

403-060D Wheat Narrow

OATS

Ezee Glide Plus Required			kg / liter 0.5269 (no seed treatment)	Planting Speed (kph)	Maximum Kilograms per Hectare	Minimum Kilograms per Hectare
Max rpm	Min rpm	Kilograms per rev.	19.1cm Rows	6.4	120	17
				8.0	96	14
35	5	0.007		9.7	80	11
				11.3	69	10
				12.9	60	9
Max rpm	Min rpm	Kilograms per rev.	25.4cm Rows	6.4	93	13
				8.0	75	11
35	5	0.007		9.7	62	9
				11.3	53	8
				12.9	47	7
Max. rpm	Min rpm	Kilograms per rev.	Twin Row 70cm 35cm Rows	6.4	68	10
				8.0	54	8
35	5	0.007		9.7	45	6
				11.3	39	6
				12.9	34	5
Max rpm	Min rpm	Kilograms per rev.	Twin Row 76.2cm 38.1cm Rows	6.4	62	9
				8.0	50	7
35	5	0.007		9.7	41	6
				11.3	36	5
				12.9	31	4

34174

Volumetric Rate Range Charts, Metric Units

Note: Ezee Glide Plus talc/graphite blend seed lubricant is mandatory for all seeds.

Oats, Wheat Wide wheel

403-119D Wheat Wide

403-085D Wheat Wide

OATS

Ezee Glide Plus Required			kg / liter 0.5269 (no seed treatment)	Planting Speed (kph)	Maximum Kilograms per Hectare	Minimum Kilograms per Hectare
Max rpm	Min rpm	Kilograms per rev.	19.1cm Rows	6.4	249	100
				8.0	199	80
30	12	0.018		9.7	166	66
				11.3	142	57
				12.9	124	50
Max rpm	Min rpm	Kilograms per rev.	25.4cm Rows	6.4	193	77
				8.0	154	62
30	12	0.018		9.7	129	51
				11.3	110	44
				12.9	96	39
Max. rpm	Min rpm	Kilograms per rev.	Twin Row 70cm 35cm Rows	6.4	140	56
				8.0	112	45
30	12	0.018		9.7	93	37
				11.3	80	32
				12.9	70	28
Max rpm	Min rpm	Kilograms per rev.	Twin Row 76.2cm 38.1cm Rows	6.4	129	51
				8.0	103	41
30	12	0.018		9.7	86	34
				11.3	73	29
				12.9	64	26

34175

Volumetric Rate Range Charts, Metric Units

Note: Ezee Glide Plus talc/graphite blend seed lubricant is mandatory for all seeds.

Oats, V3 wheel

403-120D - V3

403-094D - V3

OATS						
Ezee Glide Plus Required			kg / liter 0.4947 (no seed treatment)	Planting Speed (kph)	Maximum Kilograms per Hectare	Minimum Kilograms per Hectare
Max rpm	Min rpm	Kilograms per rev.	19.1cm Rows	6.4	400	160
				8.0	320	128
30	12	0.028		9.7	267	107
				11.3	229	91
				12.9	200	80
Max rpm	Min rpm	Kilograms per rev.	25.4cm Rows	6.4	310	124
				8.0	248	99
30	12	0.028		9.7	206	83
				11.3	177	71
				12.9	155	62
Max. rpm	Min rpm	Kilograms per rev.	Twin Row 70cm 35cm Rows	6.4	225	90
				8.0	180	72
30	12	0.028		9.7	150	60
				11.3	128	51
				12.9	112	45
Max rpm	Min rpm	Kilograms per rev.	Twin Row 76.2cm 38.1cm Rows	6.4	206	83
				8.0	165	66
30	12	0.028		9.7	138	55
				11.3	118	47
				12.9	103	41

34176

Volumetric Rate Range Charts, Metric Units

Note: Ezee Glide Plus talc/graphite blend seed lubricant is mandatory for all seeds.

Rice, Low Rate

403-426D RICE LOW RATE
These wheels Require Flow Gate
817-529C FLOW GATE

403-425D RICE LOW RATE
These wheels Require Flow Gate
817-529C FLOW GATE

RICE - LOW RATE

Ezee Glide Plus Required — kg / liter 0.5783 (w / seed treatment)

Max rpm	Min rpm	Kilograms per rev.		Planting Speed (kph)	Maximum Kilograms per Hectare	Minimum Kilograms per Hectare
			19.1cm Rows	6.4	88	44
				8.0	71	35
30	15	0.006		9.7	59	29
				11.3	50	25
				12.9	44	22
			25.4cm Rows	6.4	68	34
				8.0	55	27
30	15	0.006		9.7	46	23
				11.3	39	20
				12.9	34	17
Max. rpm	Min rpm	Kilograms per rev.	Twin Row 70cm 35cm Rows	6.4	50	25
				8.0	40	20
30	15	0.006		9.7	33	17
				11.3	28	14
				12.9	25	12
Max rpm	Min rpm	Kilograms per rev.	Twin Row 76.2cm 38.1cm Rows	6.4	46	23
				8.0	36	18
30	15	0.006		9.7	30	15
				11.3	26	13
				12.9	23	11

34177

Volumetric Rate Range Charts, Metric Units

Note: Ezee Glide Plus talc/graphite blend seed lubricant is mandatory for all seeds.

Rice, Medium Rate

403-143D RICE MED RATE
These wheels Require Flow Gate
817-529C FLOW GATE

403-142D RICE MED RATE
These wheels Require Flow Gate
817-529C FLOW GATE

RICE - MEDIUM RATE

Ezee Glide Plus Required			kg / liter 0.5783 (w / seed treatment)	Planting Speed (kph)	Maximum Kilograms per Hectare	Minimum Kilograms per Hectare
Max rpm	Min rpm	Kilograms per rev.	19.1cm Rows	6.4	168	84
				8.0	134	67
30	15	0.012		9.7	112	56
				11.3	96	48
				12.9	84	42
Max rpm	Min rpm	Kilograms per rev.	25.4cm Rows	6.4	130	65
				8.0	104	52
30	15	0.012		9.7	87	43
				11.3	74	37
				12.9	65	32
Max. rpm	Min rpm	Kilograms per rev.	Twin Row 70cm 35cm Rows	6.4	94	47
				8.0	75	38
30	15	0.012		9.7	63	31
				11.3	54	27
				12.9	47	24
Max rpm	Min rpm	Kilograms per rev.	Twin Row 76.2cm 38.1cm Rows	6.4	87	43
				8.0	69	35
30	15	0.012		9.7	58	29
				11.3	49	25
				12.9	43	22

34178

Volumetric Rate Range Charts, Metric Units

Note: Ezee Glide Plus talc/graphite blend seed lubricant is mandatory for all seeds.

Rice, High Rate

403-121D RICE HIGH RATE
These wheels Require Flow Gate
817-529C FLOW GATE

403-095D RICE HIGH RATE
These wheels Require Flow Gate
817-529C FLOW GATE

RICE - HIGH RATE

Ezee Glide Plus Required			kg / liter 0.5783 (no seed treatment)	Planting Speed (kph)	Maximum Kilograms per Hectare	Minimum Kilograms per Hectare
Max rpm	Min rpm	Kilograms per rev.	19.1cm Rows	6.4	284	142
				8.0	227	114
30	15	0.020		9.7	189	95
				11.3	162	81
				12.9	142	71
Max rpm	Min rpm	Kilograms per rev.	25.4cm Rows	6.4	220	110
				8.0	176	88
30	15	0.020		9.7	146	73
				11.3	126	63
				12.9	110	55
Max. rpm	Min rpm	Kilograms per rev.	Twin Row 70cm 35cm Rows	6.4	159	80
				8.0	128	64
30	15	0.020		9.7	106	53
				11.3	91	46
				12.9	80	40
Max rpm	Min rpm	Kilograms per rev.	Twin Row 76.2cm 38.1cm Rows	6.4	146	73
				8.0	117	59
30	15	0.020		9.7	98	49
				11.3	84	42
				12.9	73	37

34179

Volumetric Rate Range Charts, Metric Units

Note: Ezee Glide Plus talc/graphite blend seed lubricant is mandatory for all seeds.

Rye, Wheat Narrow wheel

403-118D Wheat Narrow

403-060D Wheat Narrow

RYE

Ezee Glide Plus Required			kg / liter 0.7453 (no seed treatment)	Planting Speed (kph)	Maximum Kilograms per Hectare	Minimum Kilograms per Hectare
Max rpm	Min rpm	Kilograms per rev.	19.1cm Rows	6.4	211	30
				8.0	169	24
35	5	0.013		9.7	140	20
				11.3	120	17
				12.9	105	15
Max rpm	Min rpm	Kilograms per rev.	25.4cm Rows	6.4	163	23
				8.0	131	19
35	5	0.013		9.7	109	16
				11.3	93	13
				12.9	82	12
Max. rpm	Min rpm	Kilograms per rev.	Twin Row 70cm 35cm Rows	6.4	118	17
				8.0	95	14
35	5	0.013		9.7	79	11
				11.3	68	10
				12.9	59	8
Max rpm	Min rpm	Kilograms per rev.	Twin Row 76.2cm 38.1cm Rows	6.4	109	16
				8.0	87	12
35	5	0.013		9.7	73	10
				11.3	62	9
				12.9	54	8

34180

Volumetric Rate Range Charts, Metric Units

Note: Ezee Glide Plus talc/graphite blend seed lubricant is mandatory for all seeds.

Rye, Wheat Wide wheel

403-119D Wheat Wide

403-085D Wheat Wide

Ezee Glide Plus Required			RYE kg / liter 0.7453 (no seed treatment)	Planting Speed (kph)	Maximum Kilograms per Hectare	Minimum Kilograms per Hectare
Max rpm	Min rpm	Kilograms per rev.	19.1cm Rows	6.4	400	160
				8.0	320	128
30	12	0.028		9.7	267	107
				11.3	229	91
				12.9	200	80
Max rpm	Min rpm	Kilograms per rev.	25.4cm Rows	6.4	310	124
				8.0	248	99
30	12	0.028		9.7	206	83
				11.3	177	71
				12.9	155	62
Max. rpm	Min rpm	Kilograms per rev.	Twin Row 70cm 35cm Rows	6.4	225	90
				8.0	180	72
30	12	0.028		9.7	150	60
				11.3	128	51
				12.9	112	45
Max rpm	Min rpm	Kilograms per rev.	Twin Row 76.2cm 38.1cm Rows	6.4	206	83
				8.0	165	66
30	12	0.028		9.7	138	55
				11.3	118	47
				12.9	103	41

34181

Volumetric Rate Range Charts, Metric Units

Note: Ezee Glide Plus talc/graphite blend seed lubricant is mandatory for all seeds.

Wheat, Hard Red Winter, Narrow wheel

403-118D Wheat Narrow

403-060D Wheat Narrow

Ezee Glide Plus Required			WHEAT *(Hard Red Winter)* kg / liter 0.8224 (no seed treatment)	Planting Speed (kph)	Maximum Kilograms per Hectare	Minimum Kilograms per Hectare
Max rpm	Min rpm	Kilograms per rev.	19.1cm Rows	6.4	256	37
				8.0	205	29
35	5	0.015		9.7	171	24
				11.3	146	21
				12.9	128	18
Max rpm	Min rpm	Kilograms per rev.	25.4cm Rows	6.4	198	28
				8.0	158	23
35	5	0.015		9.7	132	19
				11.3	113	16
				12.9	99	14
Max. rpm	Min rpm	Kilograms per rev.	Twin Row 70cm 35cm Rows	6.4	144	21
				8.0	115	16
35	5	0.015		9.7	96	14
				11.3	82	12
				12.9	72	10
Max rpm	Min rpm	Kilograms per rev.	Twin Row 76.2cm 38.1cm Rows	6.4	132	19
				8.0	106	15
35	5	0.015		9.7	88	13
				11.3	75	11
				12.9	66	9

34182

Volumetric Rate Range Charts, Metric Units

Note: Ezee Glide Plus talc/graphite blend seed lubricant is mandatory for all seeds.

Wheat, Hard Red Winter, Wide wheel

403-119D Wheat Wide

403-085D Wheat Wide

Ezee Glide Plus Required			WHEAT *(Hard Red Winter)* kg / liter 0.8224 (no seed treatment)	Planting Speed (kph)	Maximum Kilograms per Hectare	Minimum Kilograms per Hectare
Max rpm	Min rpm	Kilograms per rev.	19.1cm Rows	6.4	503	201
				8.0	403	161
30	12	0.035		9.7	335	134
				11.3	288	115
				12.9	252	101
Max rpm	Min rpm	Kilograms per rev.	25.4cm Rows	6.4	390	156
				8.0	312	125
30	12	0.035		9.7	260	104
				11.3	223	89
				12.9	195	78
Max. rpm	Min rpm	Kilograms per rev.	Twin Row 70cm 35cm Rows	6.4	283	113
				8.0	226	90
30	12	0.035		9.7	188	75
				11.3	162	65
				12.9	141	57
Max rpm	Min rpm	Kilograms per rev.	Twin Row 76.2cm 38.1cm Rows	6.4	260	104
				8.0	208	83
30	12	0.035		9.7	173	69
				11.3	148	59
				12.9	130	52

34183

Volumetric Rate Range Charts, Metric Units

Note: Ezee Glide Plus talc/graphite blend seed lubricant is mandatory for all seeds.

Wheat, Soft Red Winter, Wide wheel

403-119D Wheat Wide

403-085D Wheat Wide

Ezee Glide Plus Required			WHEAT *(Soft Red Winter)* kg / liter 0.7967 (w / seed treatment)	Planting Speed (kph)	Maximum Kilograms per Hectare	Minimum Kilograms per Hectare
Max rpm	Min rpm	Kilograms per rev.	19.1cm Rows	6.4	439	175
				8.0	351	140
30	12	0.031		9.7	292	117
				11.3	251	100
				12.9	219	88
Max rpm	Min rpm	Kilograms per rev.	25.4cm Rows	6.4	340	136
				8.0	272	109
30	12	0.031		9.7	226	91
				11.3	194	78
				12.9	170	68
Max. rpm	Min rpm	Kilograms per rev.	Twin Row 70cm 35cm Rows	6.4	246	99
				8.0	197	79
30	12	0.031		9.7	164	66
				11.3	141	56
				12.9	123	49
Max rpm	Min rpm	Kilograms per rev.	Twin Row 76.2cm 38.1cm Rows	6.4	226	91
				8.0	181	72
30	12	0.031		9.7	151	60
				11.3	129	52
				12.9	113	45

34184

Volumetric Rate Range Charts, Metric Units

Note: Ezee Glide Plus talc/graphite blend seed lubricant is mandatory for all seeds.

Wheat, Soft Red Winter, V3 wheel

403-120D - V3 | **403-094D - V3**

WHEAT

Ezee Glide Plus Required			*(Soft Red Winter)* kg / liter 0.7967 (w / seed treatment)	Planting Speed (kph)	Maximum Kilograms per Hectare	Minimum Kilograms per Hectare
Max rpm	Min rpm	Kilograms per rev.	19.1cm Rows	6.4	584	234
				8.0	468	187
30	12	0.041		9.7	390	156
				11.3	334	134
				12.9	292	117
Max rpm	Min rpm	Kilograms per rev.	25.4cm Rows	6.4	452	181
				8.0	362	145
30	12	0.041		9.7	302	121
				11.3	259	103
				12.9	226	90
Max. rpm	Min rpm	Kilograms per rev.	Twin Row 70cm 35cm Rows	6.4	328	131
				8.0	263	105
30	12	0.041		9.7	219	88
				11.3	188	75
				12.9	164	66
Max rpm	Min rpm	Kilograms per rev.	Twin Row 76.2cm 38.1cm Rows	6.4	302	121
				8.0	241	97
30	12	0.041		9.7	201	80
				11.3	172	69
				12.9	151	60

34185

Rate Ranges, 6-Finger Meter, Metric

Chart in U.S. Customary units is on page 15.

Finger Meter RPM Limits

		Planting Speed (kph)	Maximum Population (seeds/ha)	Minimum Population (seeds/ha)
Twin Row 70cm		**6.4**	**135 706**	**71 844**
35cm Rows		**7.2**	**120 628**	**63 862**
Max	Min	**8.0**	**108 565**	**57 475**
rpm	rpm	**8.9**	**98 695**	**52 250**
85	**45**	**9.7**	**90 471**	**47 896**
		10.5	**83 511**	**44 212**
Twin Row 76.2cm		**6.4**	**124 759**	**66 049**
38.1cm Rows		**7.2**	**110 897**	**58 710**
Max	Min	**8.0**	**99 807**	**52 839**
rpm	rpm	**8.9**	**90 734**	**48 036**
85	**45**	**9.7**	**83 173**	**44 033**
		10.5	**76 775**	**40 645**
Twin Row 91.4cm		**6.4**	**103 966**	**55 041**
		7.2	**92 414**	**48 925**
Max	Min	**8.0**	**83 173**	**44 033**
rpm	rpm	**8.9**	**75 612**	**40 030**
85	**45**	**9.7**	**69 311**	**36 694**
		10.5	**63 979**	**33 871**
Twin Row 96.5cm		**6.4**	**98 494**	**52 144**
		7.2	**87 550**	**46 350**
Max	Min	**8.0**	**78 795**	**41 715**
rpm	rpm	**8.9**	**71 632**	**37 923**
85	**45**	**9.7**	**65 663**	**34 763**
		10.5	**60 612**	**32 089**
Twin Row 101.6cm		**6.4**	**93 569**	**49 537**
50.8cm Rows		**7.2**	**83 173**	**44 033**
Max	Min	**8.0**	**74 855**	**39 629**
rpm	rpm	**8.9**	**68 050**	**36 027**
85	**45**	**9.7**	**62 380**	**33 024**
		10.5	**57 581**	**30 484**

6 Finger Meter Seed Lubricant Required

		Planting Speed (kph)	Maximum Population (seeds/ha)	Minimum Population (seeds/ha)
55.9cm Rows		**6.4**	**85 063**	**45 033**
		7.2	**75 612**	**40 030**
Max	Min	**8.0**	**68 050**	**36 027**
rpm	rpm	**8.9**	**61 864**	**32 752**
85	**45**	**9.7**	**56 709**	**30 022**
		10.5	**52 346**	**27 713**
70cm Rows		**6.4**	**67 853**	**35 922**
		7.2	**60 314**	**31 931**
Max	Min	**8.0**	**54 282**	**28 738**
rpm	rpm	**8.9**	**49 348**	**26 125**
85	**45**	**9.7**	**45 235**	**23 948**
		10.5	**41 756**	**22 106**
76.2cm Rows		**6.4**	**62 380**	**33 024**
		7.2	**55 448**	**29 355**
Max	Min	**8.0**	**49 904**	**26 420**
rpm	rpm	**8.9**	**45 367**	**24 018**
85	**45**	**9.7**	**41 586**	**22 016**
		10.5	**38 387**	**20 323**
91.4cm Rows		**6.4**	**51 983**	**27 520**
		7.2	**46 207**	**24 463**
Max	Min	**8.0**	**41 586**	**22 016**
rpm	rpm	**8.9**	**37 806**	**20 015**
85	**45**	**9.7**	**34 655**	**18 347**
		10.5	**31 990**	**16 936**
96.5cm Rows		**6.4**	**49 247**	**26 072**
		7.2	**43 775**	**23 175**
Max	Min	**8.0**	**39 398**	**20 858**
rpm	rpm	**8.9**	**35 816**	**18 961**
85	**45**	**9.7**	**32 831**	**17 381**
		10.5	**30 306**	**16 044**
101.6cm Rows		**6.4**	**46 785**	**24 768**
		7.2	**41 586**	**22 016**
Max	Min	**8.0**	**37 428**	**19 815**
rpm	rpm	**8.9**	**34 025**	**18 013**
85	**45**	**9.7**	**31 190**	**16 512**
		10.5	**28 791**	**15 242**

34249J

Rate Ranges, 12-Finger Meter, Metric

Chart in U.S. Customary units is on page 16.

Finger Meter RPM Limits **12 Finger Meter** **Seed Lubricant Required**

		Planting Speed (kph)	Maximum Population (seeds/ha)	Minimum Population (seeds/ha)
Twin Row 70cm		**6.4**	**239 481**	**143 689**
35cm Rows		**7.2**	**212 872**	**127 723**
Max	Min	**8.0**	**191 585**	**114 951**
rpm	rpm	**8.9**	**174 168**	**104 501**
75	**45**	**9.7**	**159 654**	**95 792**
		10.5	**147 373**	**88 424**
Twin Row 76.2cm		**6.4**	**220 163**	**132 098**
38.1cm Rows		**7.2**	**195 701**	**117 420**
Max	Min	**8.0**	**176 130**	**105 678**
rpm	rpm	**8.9**	**160 119**	**96 071**
75	**45**	**9.7**	**146 775**	**88 065**
		10.5	**135 485**	**81 291**
Twin Row 91.4cm		**6.4**	**183 469**	**110 082**
0		**7.2**	**163 084**	**97 850**
Max	Min	**8.0**	**146 775**	**88 065**
rpm	rpm	**8.9**	**133 432**	**80 059**
75	**45**	**9.7**	**122 313**	**73 388**
		10.5	**112 904**	**67 742**
Twin Row 96.5cm		**6.4**	**173 813**	**104 288**
		7.2	**154 500**	**92 700**
Max	Min	**8.0**	**139 050**	**83 430**
rpm	rpm	**8.9**	**126 409**	**75 846**
75	**45**	**9.7**	**115 875**	**69 525**
		10.5	**106 962**	**64 177**
Twin Row 101.6cm		**6.4**	**165 122**	**99 073**
50.8cm Rows		**7.2**	**146 775**	**88 065**
Max	Min	**8.0**	**132 098**	**79 259**
rpm	rpm	**8.9**	**120 089**	**72 053**
75	**45**	**9.7**	**110 082**	**66 049**
		10.5	**101 614**	**60 968**

		Planting Speed (kph)	Maximum Population (seeds/ha)	Minimum Population (seeds/ha)
55.9cm Rows		**6.4**	**150 111**	**90 067**
		7.2	**133 432**	**80 059**
Max	Min	**8.0**	**120 089**	**72 053**
rpm	rpm	**8.9**	**109 172**	**65 503**
75	**45**	**9.7**	**100 074**	**60 044**
		10.5	**92 376**	**55 426**
70cm Rows		**6.4**	**119 741**	**71 844**
		7.2	**106 436**	**63 862**
Max	Min	**8.0**	**95 792**	**57 475**
rpm	rpm	**8.9**	**87 084**	**52 250**
75	**45**	**9.7**	**79 827**	**47 896**
		10.5	**73 687**	**44 212**
76.2cm Rows		**6.4**	**110 082**	**66 049**
		7.2	**97 850**	**58 710**
Max	Min	**8.0**	**88 065**	**52 839**
rpm	rpm	**8.9**	**80 059**	**48 036**
75	**45**	**9.7**	**73 388**	**44 033**
		10.5	**67 742**	**40 645**
91.4cm Rows		**6.4**	**91 735**	**55 041**
		7.2	**81 542**	**48 925**
Max	Min	**8.0**	**73 388**	**44 033**
rpm	rpm	**8.9**	**66 716**	**40 030**
75	**45**	**9.7**	**61 156**	**36 694**
		10.5	**56 452**	**33 871**
96.5cm Rows		**6.4**	**86 906**	**52 144**
		7.2	**77 250**	**46 350**
Max	Min	**8.0**	**69 525**	**41 715**
rpm	rpm	**8.9**	**63 205**	**37 923**
75	**45**	**9.7**	**57 938**	**34 763**
		10.5	**53 481**	**32 089**
101.6cm Rows		**6.4**	**82 561**	**49 537**
		7.2	**73 388**	**44 033**
Max	Min	**8.0**	**66 049**	**39 629**
rpm	rpm	**8.9**	**60 044**	**36 027**
75	**45**	**9.7**	**55 041**	**33 024**
		10.5	**50 807**	**30 484**

34249K

Finger Meter Brush Adjustment, Metric

Brush adjustment in U.S. customary units is on page 17.

Sprocket Indexing Charts (Metric)

1. For: your 6- or 12-finger meter, and your twin row spacing (70cm on this page) find your seed rate in the Population column, or your seed spacing in the Seed Spacing column. Seed spacing is seed-to-seed within a single row of a twin row pair.
2. At the front/forward row unit of a pair, set the driven (final) sprocket of the meter drive so that tooth stamped #1 is straight up (TDC, 12:00 position).
3. At the rear/trailing row unit of the pair, set the driven sprocket so that the tooth number at “Rear Meter” is in the straight up 12:00 position.

These charts are for 70cm metric spacing. See page 20 for U.S. customary units.

NOTICE

Not Rate or Spacing Charts:
These are NOT seed rate or seed spacing charts. These are for staggering seed spacing between the rows of a twin row.

Note: For adjusting spacing between rows of the pair, see “**Indexing Fine Adjustment**” on page 22.

NOTICE

Setting Error Risk:
Verify the 12:00 sprocket tooth position with the top length of chain taut.

6 Finger Meter Twin Row Sprocket Indexing

70cm (27.6in) Twin Row		Set Sprocket to Tooth Number on ..	
Population Seeds per Hectare	Single Row Seed Spacing (cm)	Front Meter	Rear Meter
42 300 to 46 600	61.4 to 67.6	1	4
46 600 to 50 600	56.5 to 61.4	1	7
50 600 to 54 900	52.0 to 56.5	1	10
54 900 to 59 200	48.3 to 52.0	1	13
59 200 to 63 400	45.0 to 48.3	1	16
63 400 to 67 300	42.4 to 45.0	1	19
67 300 to 71 600	39.9 to 42.4	1	3
71 600 to 76 100	37.5 to 39.9	1	6
76 100 to 80 400	35.5 to 37.5	1	9
80 400 to 84 700	33.7 to 35.5	1	12
84 700 to 88 900	32.2 to 33.7	1	15
88 900 to 93 300	30.6 to 32.2	1	18
93 300 to 97 400	29.3 to 30.6	1	2
97 400 to 101 700	28.1 to 29.3	1	5
101 700 to 105 700	27.0 to 28.1	1	8
105 700 to 109 700	26.0 to 27.0	1	11
109 700 to 114 300	25.0 to 26.0	1	14
114 300 to 118 400	24.1 to 25.0	1	17
118 400 to 122 100	23.4 to 24.1	1	1
122 100 to 126 400	22.6 to 23.4	1	4
126 400 to 130 800	21.8 to 22.6	1	7
130 800 to 135 500	21.1 to 21.8	1	10
135 500 to 139 400	20.5 to 21.1	1	13
139 400 to 143 400	19.9 to 20.5	1	16

31456

12 Finger Meter Twin Row Sprocket Indexing

70cm (27.6in) Twin Row		Set Sprocket to Tooth Number on ..	
Population Seeds per Hectare	Single Row Seed Spacing (cm)	Front Meter	Rear Meter
71 600 to 76 100	37.5 to 39.9	1	13
76 100 to 80 400	35.5 to 37.5	1	5
80 400 to 84 700	33.7 to 35.5	1	16
84 700 to 88 900	32.2 to 33.7	1	8
88 900 to 93 300	30.6 to 32.2	1	19
93 300 to 97 400	29.3 to 30.6	1	11
97 400 to 101 700	28.1 to 29.3	1	3
101 700 to 105 700	27.0 to 28.1	1	14
105 700 to 109 700	26.0 to 27.0	1	6
109 700 to 114 300	25.0 to 26.0	1	17
114 300 to 118 400	24.1 to 25.0	1	9
118 400 to 122 100	23.4 to 24.1	1	1
122 100 to 126 400	22.6 to 23.4	1	12
126 400 to 130 800	21.8 to 22.6	1	4
130 800 to 135 500	21.1 to 21.8	1	15
135 500 to 139 400	20.5 to 21.1	1	7
139 400 to 143 300	19.9 to 20.5	1	18
143 300 to 148 000	19.3 to 19.9	1	10
148 000 to 152 200	18.8 to 19.3	1	2
152 200 to 156 400	18.3 to 18.8	1	13
156 400 to 160 700	17.8 to 18.3	1	5
160 700 to 164 900	17.3 to 17.8	1	16
164 900 to 169 200	16.9 to 17.3	1	8
169 200 to 173 300	16.5 to 16.9	1	19

31457A

Great Plains Manufacturing, Inc.
Corporate Office: P.O. Box 5060
Salina, Kansas 67402-5060 USA