Table of Contents Part Number Index

Parts Manual

®Yield-Pro Planter
YP40

Great Plains
Manufacturing, Inc.
www.greatplainsmfg.com

Read the Operator's manual entirely. When you see this symbol, the subsequent instructions and warnings are serious - follow without exception. Your life and the lives of others depend on it!

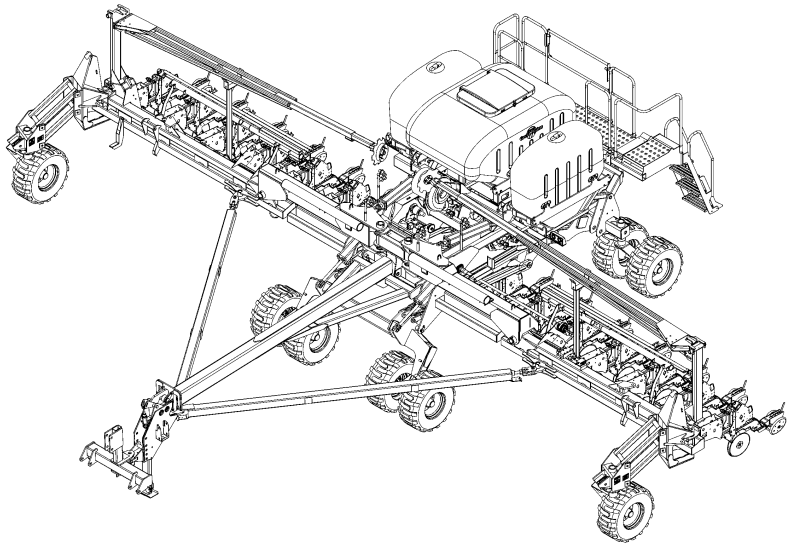

29162

Cover illustration may show optional equipment not supplied with standard unit.

© Copyright 2022 Printed 11/07/22

Table of Contents

Section 1: Introduction.....6
Using This Manual.....6
Manual Replacement Information.....6
Manual Revisions.....6
Touch-up Paint.....6
Hardware Legend.....7
Replacement Hardware.....7
Serial Numbers.....7
Part Number Service Coding.....7
Frame.....8
Tongue.....8
Tongue to Center Frame.....10
Hydraulic Hitch Mounting.....12
Offset Hitch.....14
Mainframe.....16
Rear Hitch.....20
Hopper Box to Frame.....22
Air Box.....24
Pro Box to Frame.....26
150 BU Bulk Hopper.....28
Seed Delivery.....30
Walkboard and Ladder.....32
Fan to Frame.....36
Lift Switch Mount (S/N B1057A-).....38
Lift Switch Mount (S/N B1058A+).....40
Row-Pro and Tru-Count Compressor Mounting.....42
Lights.....44
Transport.....46
Gauge Wheels.....46
Transport Wheels.....50
Drive.....52
Mainframe Hydraulic Drive.....52
Hydraulic Drive 10" Spacing.....54
Wing Drive.....56
Tru-Count Clutch Assembly.....58
Meter.....61
25 Series Corn Meter (6FP 403-169K) (12FP 403-158K) (12 FP Sunflower 403-203K).....62
25 Series Singulating Meter (403-156K).....64
20 Series Singulating Meter.....68
12FP Corn Meter (890-856C) 12FP Sunflower Meter (890-912C).....72
6FP Corn Meter (890-857C).....74
Openers.....76
20 Series Opener Arms & Mounts.....76
20 Series Opener Body.....78
20 Series Keeton Seed Firmer (Option).....80
20 Series Seed-Lok (Option).....82
25 Series Opener Arms & Mounts.....84
25 Series Opener Body.....88
25 Series Keeton Seed Firmer (Option).....92
HD10 Opener Arms And Mounts.....94
HD10 Opener Body.....96
HD10 Series Keeton Seed Firmer (Option).....98
HD10 Series Seed-Lok (Option).....100
Row-Pro.....102
Frame Mount Coulter.....106
Stop Pad Assembly.....108
Hub Assembly (815-255C and 204-084S).....110
Seed Lok.....112
Side Depth Wheel Assembly.....114
25 Series Side Depth Wheel Scraper Assembly.....116
Single Arm RC Assembly.....118
Terra-Tine 15" Wheel.....120
Terra-Tine 16" Wheel.....122
Press Wheels.....124
1 1/4" x 13" Double Press Wheel.....124
1" x 10" Double "V" Press Wheel.....126
1" x 12" Double "V" Press Wheel Long.....128
1" x 12" Double "V" Press Wheel Short.....130
Press Wheel Assembly (S/N B1032A-).....132
Press Wheel Assembly (S/N B1033A - B1074A).....134
12-12D Cast Press Wheels (S/N B1075A+).....136
Press Wheel Assembly 1X12 & 1.25X13.5 (S/N B1075A+).....138
HD 1" x 12" Double "V" Press Wheel.....140
HD 2" x 13" Single Press Wheel.....142
HD 3" x 13" Single Press Wheel.....144
HD 1 1/4" x 13 1/2" Press Wheel.....146
Press Wheel Assembly LH (S/N B1032A-).....148
Press Wheel Assembly LH (S/N B1033A - B1074A).....150
Press Wheel Assembly RH (S/N B1032A-).....152
Press Wheel Assembly RH (S/N B1033A - B1074A).....154
Press Wheel Assembly with Spider Wheels (S/N B1032A-).....156
Press Wheel Assembly with Spider Wheels (S/N B1033A - B1074A).....158
Press Wheel Assembly With Spider Wheels (S/N B1075A+).....160
Closing Wheel Drop Mount.....162
Press Wheel Breakdown.....164
Hydraulics.....166
Hydraulic Drive Components.....166
Fold - Marker And Auxilliary Hydraulics (S/N B1009A-).....168
Fold - Marker and Auxilliary Hydraulics (S/N B1010A+).....170
Auxiliary Hydraulics with No Markers.....172
Fan Hydraulics.....174
Hydraulic Hose Grips.....176
Double Selector Valve (810-274C).....178

© Copyright 2022 All rights reserved Printed 11/07/22

Great Plains Manufacturing, Inc. provides this publication “as is” without warranty of any kind, either expressed or implied. While every precaution has been taken in the preparation of this manual, Great Plains Manufacturing, Inc. assumes no responsibility for errors or omissions. Neither is any liability assumed for damages resulting from the use of the information contained herein. Great Plains Manufacturing, Inc. reserves the right to revise and improve its products as it sees fit. This publication describes the state of this product at the time of its publication, and may not reflect the product in the future.

Great Plains Manufacturing, Incorporated Trademarks
The following are trademarks of Great Plains Mfg., Inc.: Application Systems, Ausherman, Land Pride, Great Plains

All other brands and product names are trademarks or registered trademarks of their respective holders.

Printed in the United States of America.

Table of Contents (continued)

Fasse 3 Way Multiplier (810-636C).....180
Sequence Valve (810-197C).....182
Hydraulic Cylinder 3.0 x 24.0 x 1.5 Rod (810-423C)...184
Hydraulic Cylinder (810-496C) 5.0 x 16.0 x 1.5 Rod...186
Hydraulic Cylinder (810-497C 4.75x16x1.5 Rod).....188
Hydraulic Cylinder 1.5 x 2.5 x .75 Rod (810-555C).....190
Hydraulic Cylinder (810-606C - 810-674C 4x24x1.5 Rod).....192
Hydraulic Cylinder (810-607C - 810-675C 4.25x24x1.5 Rod).....194
Hydraulic Cylinder (810-650C 5x14x1.5 Rod).....196
Hydraulic Cylinder (810-651C 4.75x14x1.5 Rod).....198
Hydraulic Cylinder (810-744C 5x16x2 Rod).....200
Hydraulic Cylinder (810-745C 4.5x16.38x1.5 Rod).....202
Hydraulic Cylinder (810-833C 5x14x2 Rod).....204
Hydraulic Cylinder (810-834C 4.5x14.38x1.5 Rod).....206
Weight Transfer.....208
Cylinder Mounting.....208
Hose Routing.....210
Weight Transfer Valve ASM 3/4 (411-180S).....212
Decals.....214
Decals.....214
Monitor.....216
Monitor and Frame Control.....216
Marker.....219
Marker.....220
Marker Disk Assembly (113-025S).....222
Liquid Fertilizer.....224
Fertilizer Tanks and Mounts.....224
Fertilizer Contact Wheel Breakdown (S/N B1056A-)...226
Fertilizer Contact Wheel Breakdown (S/N B1057A+)..230
Fertilizer Contact Wheel Lock Up (S/N B1058A+).....234
Fertilizer Plumbing.....236
Rear Fertilizer Plumbing Mount.....240
John-Blue Pump (831-068C).....242
Banjo Strainer (831-029C).....244
Ball Valve Assembly (829-010C).....246
Ball Valve Assembly (829-048C).....248
Hydraulic Drive for Liquid Fertilizer.....250
Banjo Strainer (831-078C).....250
Hydraulic Connections.....252
Hydraulic Pump Mounting.....254
Plumbing for Liquid Fertilizer.....256
Dry Fertilizer.....259
Dry Fertilizer Bin Assembly.....260
Dry Fertilizer Delivery.....264
Dry Fertilizer Fan Mounting.....266
Dry Fertilizer Ground Drive to Frame.....268
Dry Fertilizer Ground Drive.....270
Dry Fertilizer Walkboard and Ladder.....272
Dry Fertilizer Meter Assembly.....276
6 Outlet Meter Shaft Assembly.....278
Dry Fertilizer Coulter.....280

Part Number Index.....282

Alphabetized Table of Contents

Selected Models

1

1 1/4" x 13" Double Press Wheel....124
1" x 10" Double "V" Press Wheel....126
1" x 12" Double "V" Press Wheel Long....128
1" x 12" Double "V" Press Wheel Short....130
12-12D Cast Press Wheels (S/N B1075A+)....136
12FP Corn Meter (890-856C) 12FP Sunflower Meter (890-912C)....72
150 BU Bulk Hopper....28

2

20 Series Keeton Seed Firmer (Option)....80
20 Series Opener Arms & Mounts....76
20 Series Opener Body....78
20 Series Seed-Lok (Option)....82
20 Series Singulating Meter....68
25 Series Corn Meter (6FP 403-169K) (12FP 403-158K) (12 FP Sunflower 403-203K)....62
25 Series Keeton Seed Firmer (Option)....92
25 Series Opener Arms & Mounts....84
25 Series Opener Body....88
25 Series Side Depth Wheel Scraper Assembly....116
25 Series Singulating Meter (403-156K)....64

6

6 Outlet Meter Shaft Assembly....278
6FP Corn Meter (890-857C)....74

A

Air Box....24
Auxiliary Hydraulics with No Markers....172

B

Ball Valve Assembly (829-010C)....246
Ball Valve Assembly (829-048C)....248
Banjo Strainer (831-029C)....244
Banjo Strainer (831-078C)....250

C

Closing Wheel Drop Mount....162
Cylinder Mounting....208

D

Decals....214
Double Selector Valve (810-274C)....178
Dry Fertilizer Bin Assembly....260
Dry Fertilizer Coulter....280
Dry Fertilizer Delivery....264
Dry Fertilizer Fan Mounting....266
Dry Fertilizer Ground Drive....270
Dry Fertilizer Ground Drive to Frame....268
Dry Fertilizer Meter Assembly....276
Dry Fertilizer Walkboard and Ladder....272

F

Fan Hydraulics....174
Fan to Frame....36
Fasse 3 Way Multiplier (810-636C)....180
Fertilizer Contact Wheel Breakdown (S/N B1056A-)....226
Fertilizer Contact Wheel Breakdown (S/N B1057A+)....230
Fertilizer Contact Wheel Lock Up (S/N B1058A+)....234
Fertilizer Plumbing....236
Fertilizer Tanks and Mounts....224
Fold - Marker And Auxilliary Hydraulics (S/N B1009A-)...168
Fold - Marker and Auxilliary Hydraulics (S/N B1010A+)..170
Frame Mount Coulter....106

G

Gauge Wheels....46

H

HD 1 1/4" x 13 1/2" Press Wheel....146
HD 1" x 12" Double "V" Press Wheel....140
HD 2" x 13" Single Press Wheel....142
HD 3" x 13" Single Press Wheel....144
HD10 Opener Arms And Mounts....94
HD10 Opener Body....96
HD10 Series Keeton Seed Firmer (Option)....98
HD10 Series Seed-Lok (Option)....100
Hopper Box to Frame....22
Hose Routing....210
Hub Assembly (815-255C and 204-084S)....110
Hydraulic Connections....252
Hydraulic Cylinder (810-496C) 5.0 x 16.0 x 1.5 Rod....186
Hydraulic Cylinder (810-497C 4.75x16x1.5 Rod)....188
Hydraulic Cylinder (810-606C - 810-674C 4x24x1.5 Rod)....192
Hydraulic Cylinder (810-607C - 810-675C 4.25x24x1.5 Rod)....194
Hydraulic Cylinder (810-650C 5x14x1.5 Rod)....196
Hydraulic Cylinder (810-651C 4.75x14x1.5 Rod)....198
Hydraulic Cylinder (810-744C 5x16x2 Rod)....200
Hydraulic Cylinder (810-745C 4.5x16.38x1.5 Rod)....202
Hydraulic Cylinder (810-833C 5x14x2 Rod)....204
Hydraulic Cylinder (810-834C 4.5x14.38x1.5 Rod)....206
Hydraulic Cylinder 1.5 x 2.5 x .75 Rod (810-555C)....190
Hydraulic Cylinder 3.0 x 24.0 x 1.5 Rod (810-423C)....184
Hydraulic Drive 10" Spacing....54
Hydraulic Drive Components....166
Hydraulic Hitch Mounting....12
Hydraulic Hose Grips....176
Hydraulic Pump Mounting....254

J

John-Blue Pump (831-068C)....242

L

Lift Switch Mount (S/N B1057A-)....38
Lift Switch Mount (S/N B1058A+)....40
Lights....44

Alphabetized Table of Contents (continued)

M

Mainframe....16
Mainframe Hydraulic Drive....52
Marker....220
Marker Disk Assembly (113-025S)....222
Monitor and Frame Control....216

O

Offset Hitch....14

P

Plumbing for Liquid Fertilizer....256
Press Wheel Assembly (S/N B1032A-)....132
Press Wheel Assembly (S/N B1033A - B1074A)....134
Press Wheel Assembly 1X12 & 1.25X13.5 (S/N B1075A+)....138
Press Wheel Assembly LH (S/N B1032A-)....148
Press Wheel Assembly LH (S/N B1033A - B1074A)....150
Press Wheel Assembly RH (S/N B1032A-)....152
Press Wheel Assembly RH (S/N B1033A - B1074A)....154
Press Wheel Assembly with Spider Wheels (S/N B1032A-)....156
Press Wheel Assembly with Spider Wheels (S/N B1033A - B1074A)....158
Press Wheel Assembly With Spider Wheels (S/N B1075A+)....160
Press Wheel Breakdown....164
Pro Box to Frame....26

R

Rear Fertilizer Plumbing Mount....240
Rear Hitch....20
Row-Pro....102
Row-Pro and Tru-Count Compressor Mounting....42

S

Seed Delivery....30
Seed Lok....112
Sequence Valve (810-197C)....182
Side Depth Wheel Assembly....114
Single Arm RC Assembly....118
Stop Pad Assembly....108

T

Terra-Tine 15" Wheel....120
Terra-Tine 16" Wheel....122
Tongue....8
Tongue to Center Frame....10
Transport Wheels....50
Tru-Count Clutch Assembly....58

W

Walkboard and Ladder....32
Weight Transfer Valve ASM 3/4 (411-180S)....212
Wing Drive....56

General Information

Using This Manual

This manual is divided into sections. The first section contains General Information, a Table of Contents, an Alphabetical Page Index, and a Part Number Index. The remaining sections divide the machine into segments (i.e. Frames, Drives, Hydraulics, etc.) which illustrate and list all parts.

The Great Plains parts in this manual are specially designed for this machine and should be replaced with Great Plains parts only.

The information in this manual is current at printing. Some parts may change to assure top performance.

Right-hand and left-hand as used in this manual are determined by facing the direction the machine will travel while in use.

Below is an example of two facing pages from a parts manual. Familiarize yourself with the contents of these pages.

Manual Replacement Information

Replacement manuals are available. Refer to your dealer or the Great Plains Publications Catalog for additional information.

Manual Revisions

When this manual is revised, the modification date is printed on the front cover and on the revised page(s).

Touch-up Paint

Repaint parts where paint is worn or scratched to prevent rust. Aerosol touch-up paint is available. To order use Great Plains parts numbers below:

GP Green	821-001C
GP Black	821-002C
GP Beige	821-003C
GP Buckskin	821-004C

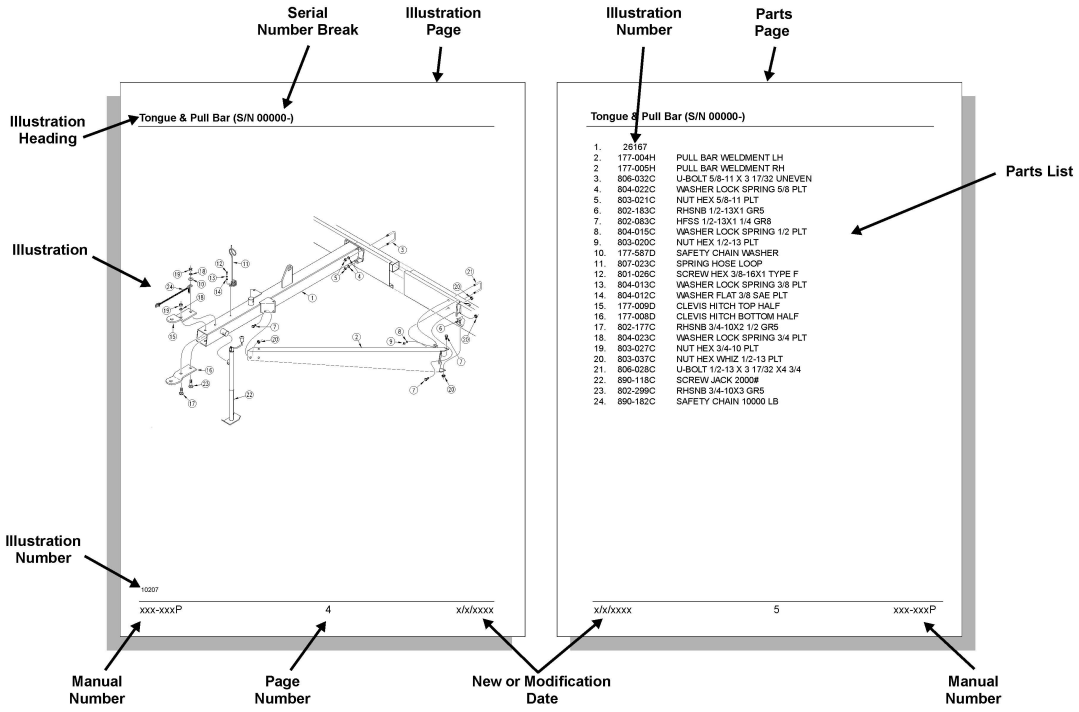

Hardware Legend

AR	As Required
BLADE	Blade Bolt
C	Cap Screw
CP	Cotter Pin
CPHSSS	Cup Point Hex Socket Set Screw
CPSHSS	Cup Point Square Head Set Screw
CPSQHSS	Cup Point Square Head Set Screw
CRFCHMS	Cross Recess Flat Countersunk Head Mach. Screw
CRPHMS	Cross Recess Pan Head Machine Screw
CRPHTFS	Cross Recess Pan Head Thread Forming
CRRHMS	Cross Recess Round Head Machine Screw
CRTHMS	Cross Recess Truss Head Machine Screw
CSNB	Countersunk Square Neck Bolt
FHMS	Flat Head Machine Screw
FTC	Full Thread Cap Screw
H	Hex Nut
HCLN	Hex Center Lock Nut
HFLCS	Hex Flange Lock Cap Screw
HFS	Hex Flange Screw
HFSLN	Hex Flange Serrated Lock Nut
HFSS	Hex Flange Serrated Screw
HHCS	Hex Head Cap Screw or Metric Bolt
HSBHCS	Hex Socket Button Head Cap Screw
HSFCHCS	Hex Socket Flat Countersunk Head Cap Screw
HSHCS	Hex Socket Head Cap Screw
HSSS	Hex Socket Head Screw
HTLN	Hex Top Lock Nut
HWHCS	Hex Washer Head Cap Screw
HWHMS	Hex Washer Head Machine Screw
HXBHCS	Hex Socket Button Head Cap Screw
J	Hex Jam Nut
JIC	37 Degree Tapered Thread
L	Helical Spring Lock Washer
LUG	Lug Bolt
NFC	National Fine Cap Screw
NPSM	National Pipe Straight Mechanical
NPTF	National Pipe Taper Fuel
P	Wide Plain Washer
PHMS	Pan Head Machine Screw
PLOW	Plow Bolt
RHMS	Round Head Machine Screw
RHSNB	Round Head Square Neck Bolt
SCREW LEVELING	Leveling Screw
SCREW THUMB	Thumb Screw
SCREW WELD	Weld Screw
SFCHMS	Slotted Flat Countersunk Head Machine Screw
SFHMS	Slotted Fillister Head Machine Screw
SP	Special
SP SCREW	Special Screw
SQHSS	Square Head Set Screw
SRHMS	Slotted Round Head Machine Screw
SSS	Socket Set Screw
STCS	Self Tapping Cap Screw
STHMS	Slotted Truss Head Machine Screw
WHEEL	Wheel Studs and Hub Long Bolts
WING	Wing Bolt

Replacement Hardware

The **Hardware Legend** above lists hardware abbreviations used in the parts lists. All bolts and nuts are grade 5 unless otherwise noted. The use of improper grades of hardware can result in personal injury, damage to equipment, or loss of property.

Serial Numbers

Always use the serial and model number when ordering parts. Refer to the operator's manual for serial number plate location.

(S/N 20001+ or S/N 20001 and above)	Includes serial numbers 20001 and above (to the latest number)
(S/N 10001↔20000)	Includes serial numbers between 10000 and 20001
(S/N 10000- or S/N 10000 and below)	Includes serial numbers 10000 and below (to the earliest number)

Tongue

(Applies to YP40 only)

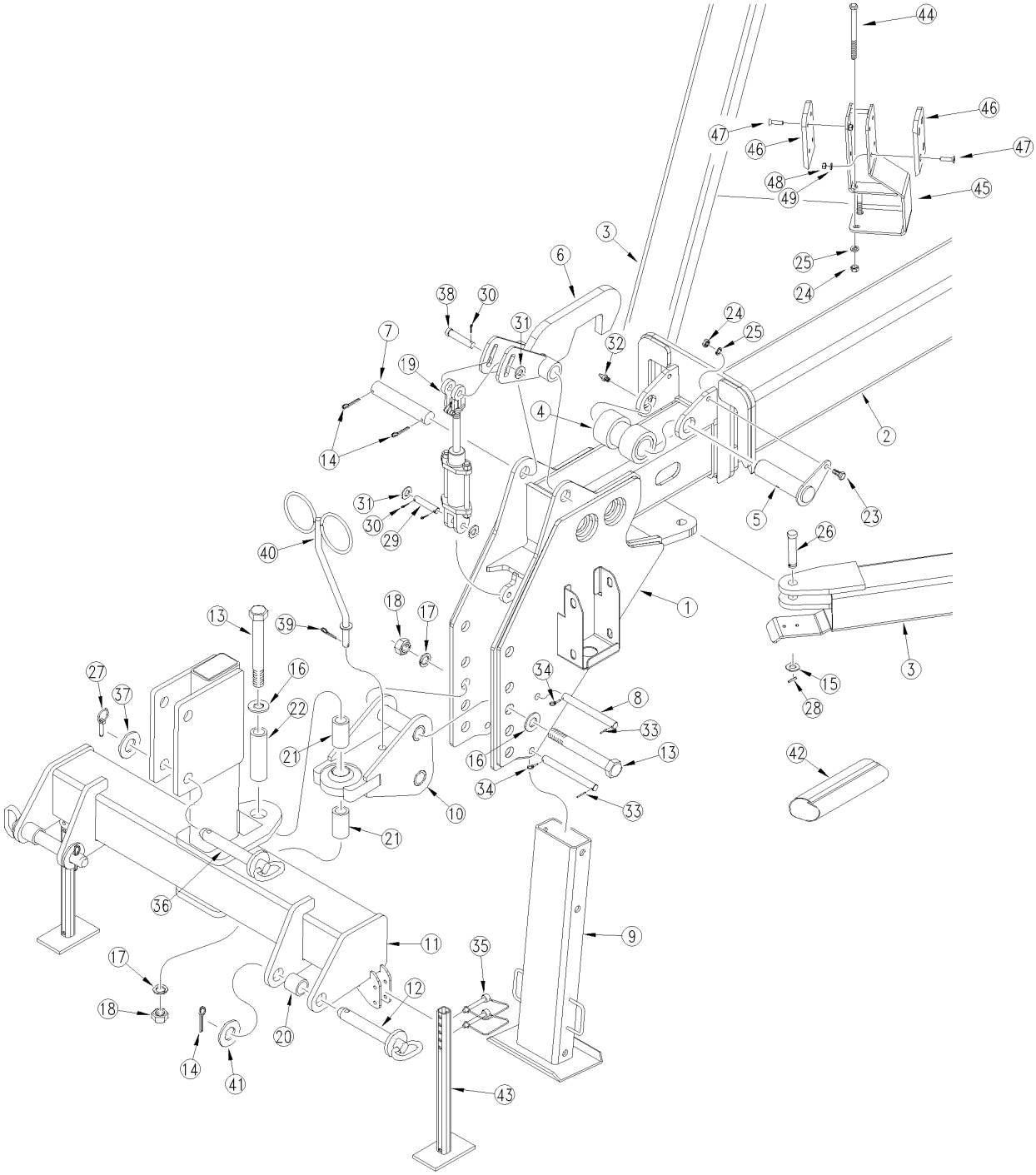

29160

Tongue

(Applies to YP40 only)

Ref.	Part No.	Part Description	Comments	Revision
	dwg29160	Image No.		
1.	401-549H	INNER TONGUE 16		
2.	401-548H	OUTER TONGUE 16		
3.	401-550H	PULLBAR WELDMNT 16 ROW		
4.	401-170H	TONGUE ROLLER BUSHING WELDMENT		
5.	401-171H	ROLLER PIN WLDMT		
6.	401-440H	YP24 TONGUE LATCH HOOK		
7.	117-323D	PIN 1 1/2 X 7 1/4 USEABLE, PLT		
8.	401-527D	PARKING SUPPORT PIN		
9.	401-436H	PARKING STAND WELDMENT 5X3		
10.	401-159H	SWIVEL COUPLER WELDMENT		
11.	401-141H	HITCH CROSSBAR WLDMT		
12.	805-168C	PIN HITCH 1 7/16 X 8 3/8 PLT		
13.	802-166C	HHCS 1 1/4-7X9 1/2 GR5 SPTHD		
14.	805-105C	PIN COTTER 1/4 X 2 1/2 PLT		
15.	804-029C	WASHER FLAT 1 SAE		
16.	804-035C	WASHER FLAT 1 1/4 USS PLT		
17.	804-030C	WASHER LOCK 1 1/4 SPRING PLT		
18.	803-034C	NUT HEX 1 1/4-7 PLT		
19.	810-555C	CYL 1.5X2.5X.75 ROD W/CLEVIS		
20.	117-379D	20P CAT3 HITCH PIN BUSHING		
21.	401-524D	SPACER TUBE FOR PLANTER HITCH		
22.	401-525D	INNER HITCH PIVOT TUBE		
23.	802-091C	HHCS 1/2-13X1 1/2 GR5803-019		
24.	803-020C	NUT HEX 1/2-13 PLT		
25.	804-015C	WASHER LOCK SPRING 1/2 PLT		
26.	805-004C	PIN CLEVIS 1 X 2 3/4 USABLE LG		
27.	805-240C	PIN LYNCH 3/16 X 1 9/16 LONG		
28.	805-024C	PIN ROLL 3/16X 1 1/2 PLT		
29.	805-141C	PIN CLEVIS 5/8 X 2 1/2 PLT		
30.	805-109C	PIN COTTER 1/8 X 1 1/4 PLT		
31.	804-021C	WASHER FLAT 5/8 SAE PLT		
32.	800-001C	GREASE ZERK STRAIGHT 1/4-28		
33.	805-041C	PIN ROLL 1/4X1 3/4		
34.	805-126C	PIN LYNCH 1/4 X 1 3/4 PLT		
35.	805-212C	PIN WIRE SNAP LOCK 3/8 X 2 1/2		
36.	805-119C	PIN HITCH 1 1/4 X 4 1/2		
37.	804-039C	WASHER FLAT 1 1/4 SAE PLT		
38.	805-334C	PIN CLEVIS 5/8 X 3 1/2		
39.	805-069C	PIN COTTER 3/16 X 1		
40.	196-166H	SWIVEL HOSE POST		
41.	804-071C	WASHER FLAT 1 1/2 SAE PLT		
42.	816-480C	HOSE WRAP 3.0-4.5 X 24LG VELCR		
43.	401-258H	YP HITCH PARK SUPPORT STAND		
44.	802-047C	HHCS 1/2-13X6 GR5		
45.	401-866H	YP30/40 HITCH LOCK		
46.	421-982D	HITCH LOCK SPACER PLATE		
47.	801-116C	HSFCHCS 3/8-16 X 1 1/2 SOCKET		
48.	803-014C	NUT HEX 3/8-16 PLT		
49.	804-013C	WASHER LOCK SPRING 3/8 PLT		

Tongue to Center Frame

(Applies to YP40 only)

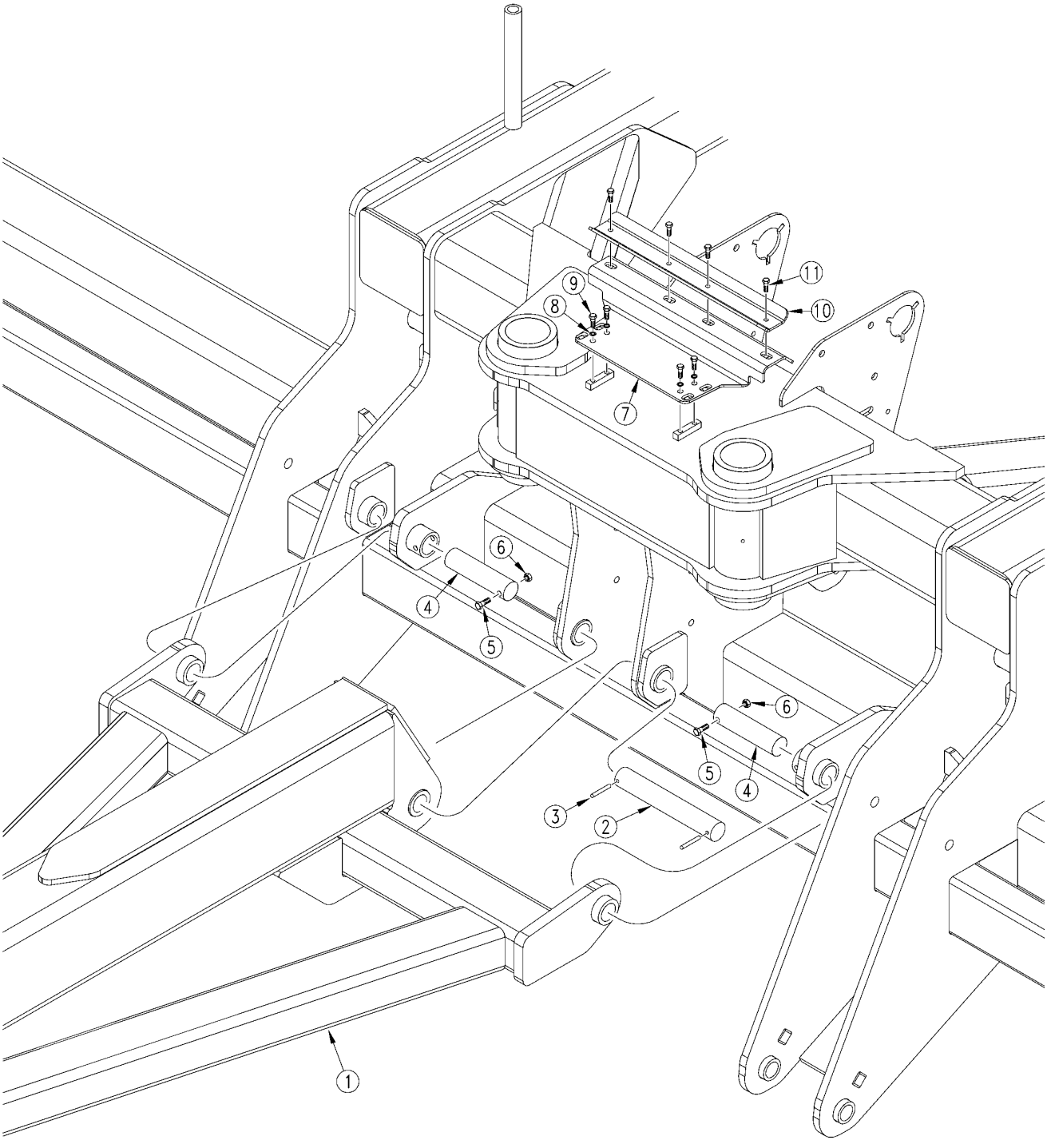

27294

Tongue to Center Frame

(Applies to YP40 only)

Ref.	Part No.	Part Description	Comments	Revision
	dwg27294	Image No.		
1.	401-548H	OUTER TONGUE 16		
2.	411-299D	PIN 1.50 X 9.88 USBL		
3.	805-255C	PIN ROLL 3/8 X 2 1/2 PLT		
4.	411-352D	PIN PLAIN 1.50X7.00 1 HOLE1045		
5.	802-114C	HHCS 3/8-16X2 1/2 GR5		
6.	803-013C	NUT LOCK 3/8-16 PLT		
7.	403-429H	HOSE SUPT PLATE THREADED		
8.	804-009C	WASHER LOCK SPRING 5/16 PLT		
9.	802-705C	HHCS 5/16-18X5/8		
10.	411-374D	UPPER HOSE CLAMP BAR		
11.	802-115C	HHCS 5/16-18X2 GR5		

Hydraulic Hitch Mounting

(Applies to YP40 only)

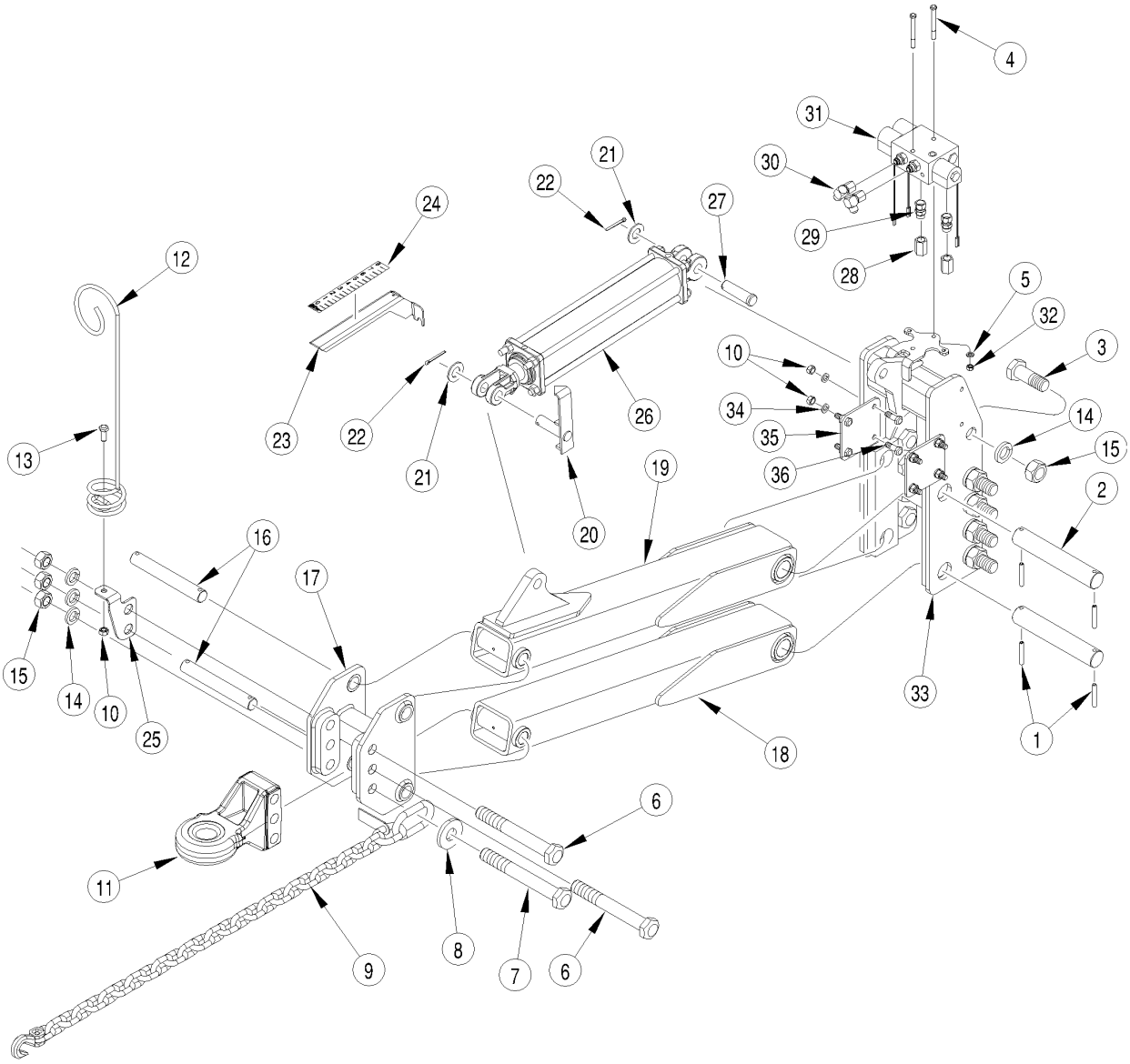

25489

Hydraulic Hitch Mounting

(Applies to YP40 only)

Ref.	Part No.	Part Description	Comments	Revision
	dwg25489	Image No.		
1.	805-255C	PIN ROLL 3/8 X 2 1/2 PLT		
2.	411-214D	PIN 1 1/4 X 9.13 USBL	(S/N B1012A-)	
2.	411-615D	PIN 1.75X9.25 USBL 1144	(S/N B1013A+) Shown	
3.	802-852C	HHCS 1 1/4-7X3 1/2 SPTHD GR5		
4.	802-147C	HHCS 3/8-16X3 1/2 GR5		
5.	804-013C	WASHER LOCK SPRING 3/8 PLT		
6.	802-110C	HHCS 1-8X9 GR5		
7.	802-429C	HHCS 1-8X10 GR5 PLT		
8.	194-070D	SAFETY CHAIN WASHER		
9.	890-398C	SAFETY CHAIN 40000 LB		
10.	803-020C	NUT HEX 1/2-13 PLT		
11.	891-670C	CAT IV ARTICULATING BALL HITCH		
12.	807-073C	SPRING HOSE LOOP HEAVY		
13.	802-034C	HHCS 1/2-13X1 1/4 GR5		
14.	804-027C	WASHER LOCK SPRING 1 PLT		
15.	803-031C	NUT HEX 1-8 PLT		
16.	411-215D	PIN 1 1/4 X 7.13 USBL		
17.	411-960H	HYDRAULIC HITCH MOUNT WMT		
18.	401-447H	HITCH LOWER ARM	(S/N B1012A-)	
18.	401-633H	HITCH LOWER ARM WELDMNT	(S/N B1013A+) Shown	
19.	401-444H	HITCH UPPER ARM	(S/N B1012A-)	
19.	401-632H	HITCH UPPER ARM WELDMNT	(S/N B1013A+) Shown	
20.	148-387H	STROKE GAUGE POINTER 3000PSI		
21.	804-029C	WASHER FLAT 1 SAE		
22.	805-060C	PIN COTTER 7/32 X 2		
23.	411-332D	HITCH INDICATOR YP TONGUE		
24.	818-181C	DECAL STROKE GAUGE		
25.	413-757D	SPRING PIGTAIL MOUNT		
26.	810-614C	CYL 3.5X16X1.75 ROD(TIE)NOPINS	Refer to "Hydraulic Cylinder (810-614C 3.5x16x1.75 Rod)" for breakdown	
27.	805-159C	PIN CLVS 1.0X3.11 USBL GR5		
28.	811-488C	AD 3/4FORB 3/4FORB		
29.	811-324C	AD 3/4MORB 3/4FJIC		
30.	811-150C	EL 3/4FJIC 3/4MJIC		
31.	810-613C	VALVE 2CIRCUIT SELECT LD HOLD		
32.	803-014C	NUT HEX 3/8-16 PLT		
33.	401-446H	CYLINDER LUG END MOUNT	(S/N B1012A-)	
33.	401-634H	CYLINDER LUG END MOUNT WELDMNT	(S/N B1013A+) Shown	
34.	804-015C	WASHER LOCK SPRING 1/2 PLT		
35.	404-228D	HYD HITCH COMP MOUNT BRACKET	Only used with Row-Pro or Tru-Count Clutch Assembly	
36.	802-091C	HHCS 1/2-13X1 1/2 GR5		

Offset Hitch

(Applies to YP40 only)

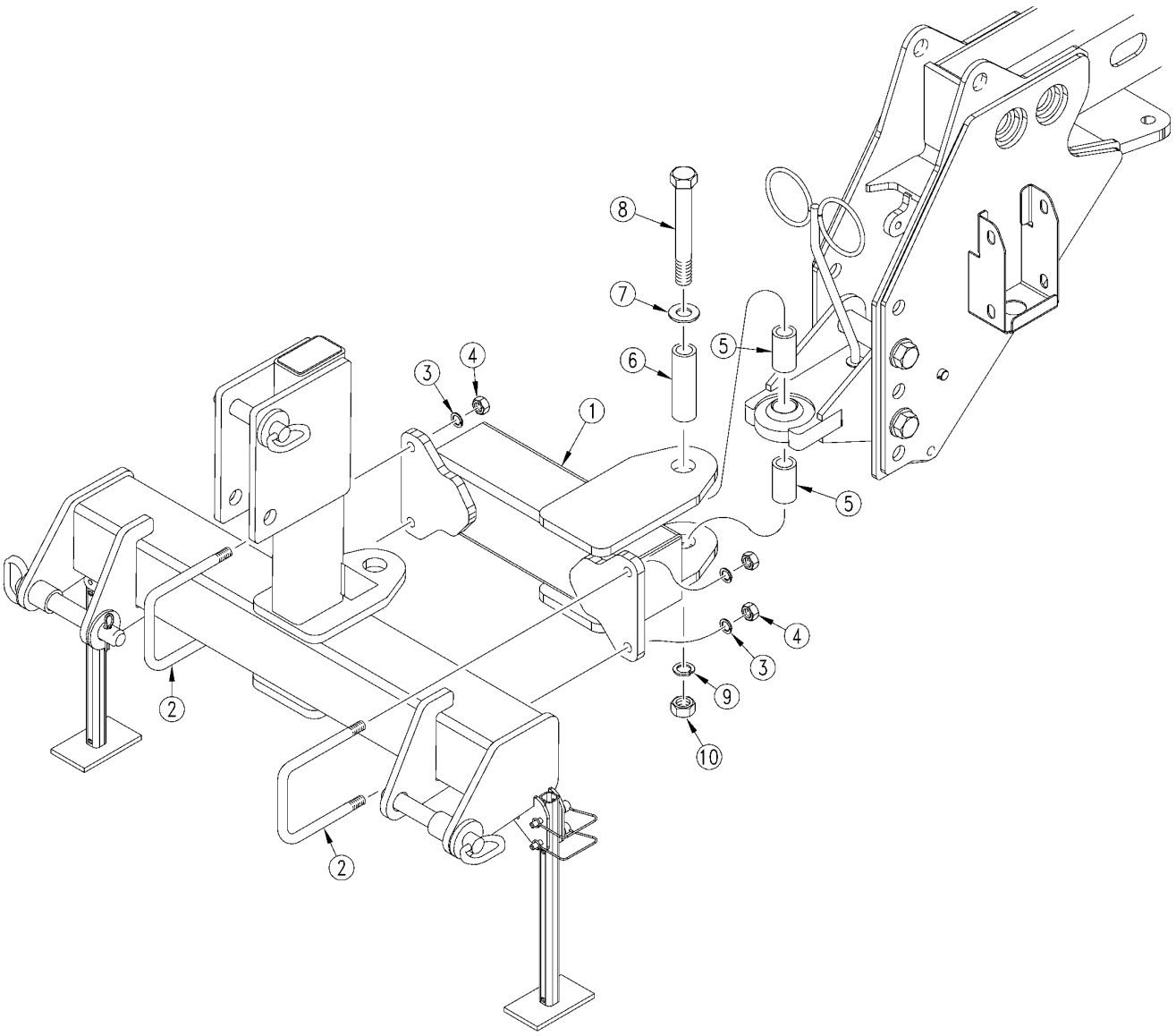

29289

Offset Hitch

(Applies to YP40 only)

Ref.	Part No.	Part Description	Comments	Revision
	dwg29289	Image No.		
1.	401-598H	HITCH OFFSET WLDMT 32R15 3PT		
2.	806-076C	U-BOLT 3/4-10 X 6 1/32 X 9		
3.	804-023C	WASHER LOCK SPRING 3/4 PLT		
4.	803-027C	NUT HEX 3/4-10 PLT		
5.	401-524D	SPACER TUBE FOR PLANTER HITC		
6.	401-525D	INNER HITCH PIVOT TUBE		
7.	804-035C	WASHER FLAT 1 1/4 USS PLT		
8.	802-166C	HHCS 1 1/4-7X9 1/2 GR5 SPTHD		
9.	804-030C	WASHER LOCK 1 1/4 SPRING PLT		
10.	803-034C	NUT HEX 1 1/4-7 PLT		

Mainframe

(Applies to YP40 only)

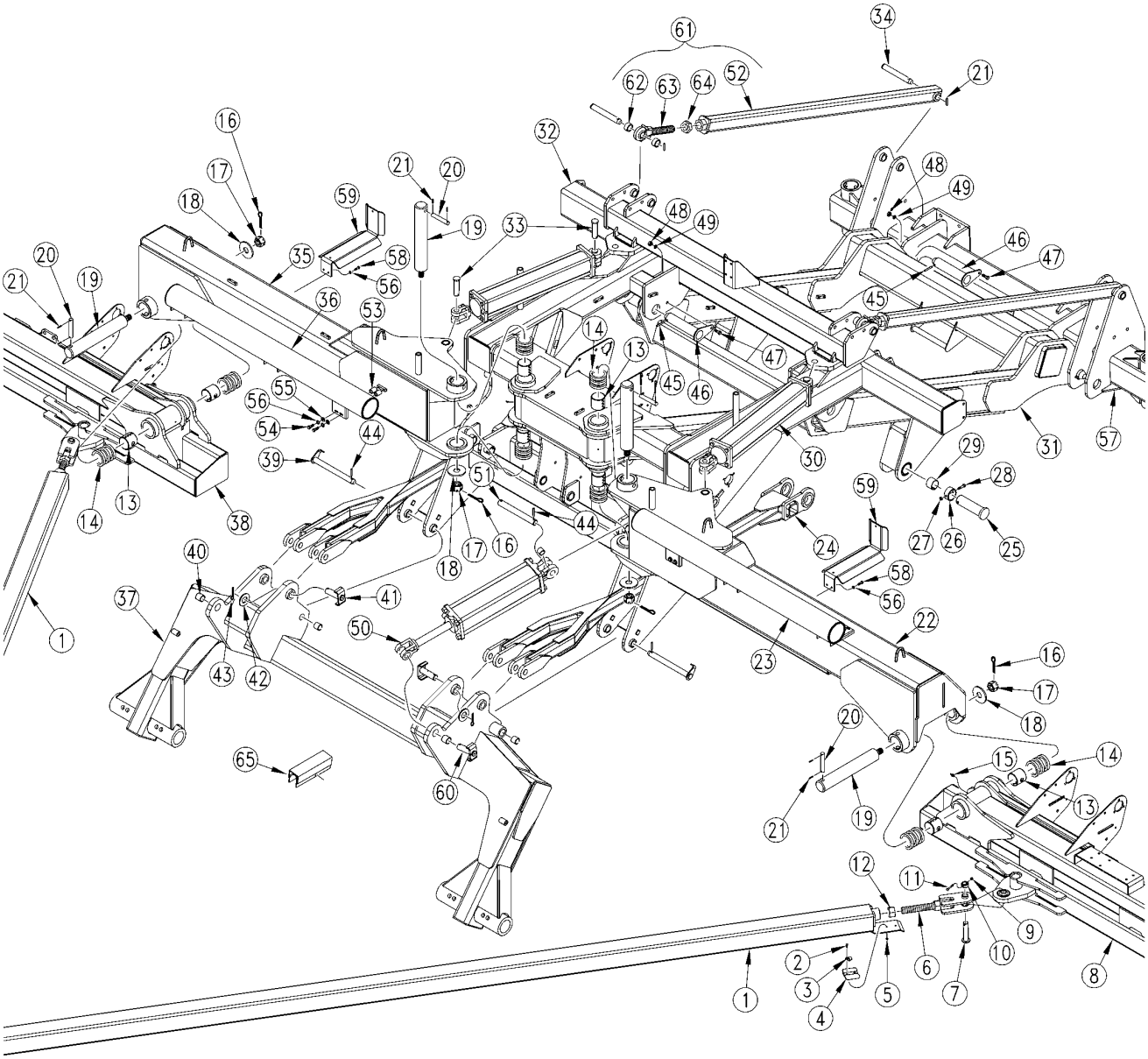

29200

Mainframe

(Applies to YP40 only)

Ref.	Part No.	Part Description	Comments	Revision
	dwg29200	Image No.		
1.	401-550H	PULLBAR WELDMNT 16 ROW		
2.	802-190C	HHCS 5/16-18X3 1/2 GR5 FTHD		
3.	800-064C	HOSE CLIP 13/16 ID		
4.	502-068D	HYD HOSE CLAMP BRACKET		
5.	803-084C	NUT HEX NYLOCK 5/16-18 PLT		
6.	401-167H	16 ROW PULLBAR ADJUSTER		
7.	805-412C	PIN CLEVIS 1 X 4.13 USBL		
8.	401-546H	LEFT WING FRAME 16		
9.	803-007C	NUT LOCK 1/4-20 PLT		
10.	402-011D	SLEEVE, SPRING LINK MOUNT		
11.	802-152C	HHCS 1/4-20X2 GR5		
12.	803-073C	NUT HEX 1 1/2-6 PLT		
13.	890-193C	STEEL BUSHING 3 1/4X3IDX3LONG		
14.	804-102C	PIVOT THRUST WASHER		
15.	800-001C	GREASE ZERK STRAIGHT 1/4-28		
16.	805-085C	PIN COTTER 5/16 X 2 1/2		
17.	803-079C	NUT HEX SLOTTED 1 1/4 - 7		
18.	197-001D	BOX HINGE PIVOT WASHER		
19.	196-653D	40P GW SWIVEL PIN		
20.	805-230C	PIN 3/4 X 4 13/32 USEABLE		
21.	805-041C	PIN ROLL 1/4X1 3/4		
22.	401-544H	LEFT TOOLBAR 16		
23.	403-234H	HOSE SUPPORT SHORT WELDMNT		
24.	401-590H	7.5 AXLE LINK WLDMT YP	Use with 7 1/2" & 8" spacing (Shown)	
24.	401-431H	YP24 LIFT ASSIST LINK	Use with 15", 20", 30" & 30"TR spacing	
24.	401-558H	LIFT LINK OFFSET NARROW ROW	Use with 10" spacing	
25.	401-433H	PIN 2.25 LIFT LINK WELDED		
26.	411-200D	PIN RETAINER TUBE 2.25		
27.	803-013C	NUT LOCK 3/8-16 PLT		
28.	802-223C	HHCS 3/8-16X4 GR5		
29.	890-072C	BUSHING 2 1/2 X 2 1/4 X 2 LG.		
30.	810-607C	HYD CYL REP 4 1/4X24X1 1/2 ROD		
31.	401-542H	REAR AXLE YP CENTER		
32.	401-560H	CENTER FRAME WELDMNT		
33.	805-196C	PIN CLEVIS 1 1/4 X 3 3/8 GR5		
34.	805-312C	PIN CLEVIS 1 1/4 X 6 7/8 USBL		
35.	401-545H	RIGHT TOOLBAR 16		
36.	403-243H	HOSE SUPT SHORT RH WELDMT		
37.	401-407H	YP24 FRONT ROCKSHAFT WELDMNT		
38.	401-547H	RIGHT WING FRAME 16		
39.	401-443H	ROCKSHAFT PIVOT PIN WLDMT		
40.	890-011C	BUSHING SPINDLE 1 1/2X1 1/4X1		
41.	196-392H	CYL PIN NR 1.25X3.63USBX3.13CH		
42.	804-039C	WASHER FLAT 1 1/4 SAE PLT		
43.	805-060C	PIN COTTER 7/32 X 2		
44.	805-255C	PIN ROLL 3/8 X 2 1/2 PLT		
45.	805-116C	PIN ROLL 3/8 X 3 1/2 PLT		
46.	401-442H	PIN WELDED 2.25X9.63USBL		
47.	802-091C	HHCS 1/2-13X1 1/2 GR5		
48.	803-020C	NUT HEX 1/2-13 PLT		
49.	804-015C	WASHER LOCK SPRING 1/2 PLT		
50.	810-650C	CYL REP 5X14X1.5 ROD TIE SPCL	(S/N B1057A-) Refer to Hydraulic Cylinder (810-650C 5x14x1.5 Rod) for breakdown	

Mainframe (continued)

(Applies to YP40 only)

Ref	Part No.	Part Description	Comments	Revision
50.	810-833C	CYL REP 5X14X2 ROD (TIE)	(S/N B1058A+) Refer to Hydraulic Cylinder (810-833C 5x14x2 Rod) for breakdown	
50.	810-496C	CYL REP 5X16X1.5 ROD (TIE)	(S/N B1057A-) (Used with Hi Float tires only) Refer to Hydraulic Cylinder (810-496C 5x16x1.5 Rod) for breakdown	
50.	810-744C	CYL REP 5X16X2 ROD (TIE)	(S/N B1058A+) (Used with Hi Float tires only) Refer to "Hydraulic Cylinder (810-745C) 5x16x2 Rod" for breakdown	
51.	411-201D	PIN 1.25 X 9.38 USBL		
52.	401-694H	AXLE LEVEL LINK YP24 WLDMT		
53.	199-088D	25P PW HANDLE SPACER TUBE		
54.	802-172C	HHCS 5/16-18X2 1/2 GR5		
55.	804-036C	WASHER FLAT 5/16 SAE PLT		
56.	804-009C	WASHER LOCK SPRING 5/16 PLT		
57.	401-543H	AXLE REAR PIV MNTD YP12 16		
58.	802-007C	HHCS 5/16-18X3/4 GR5		
59.	403-381D	SUPPORT, TOOLBAR AIR HOSE		
60.	196-409H	CYL PIN NR 1.25X3.09X2.63 W/GR		
61.	401-693L	LEVEL LINK ASM YP		
62.	160-404D	NTA WING PIVOT SLEAVE		
63.	566-042H	TURNBUCKLE SUB WELDMENT		
64.	803-063C	NUT HEX JAM 1 1/2-6 PLT		
65.	401-786H	TRANSPORT LOCK 17 3/4 X 2	Used with standard tires only	
65.	401-785H	TRANSPORT LOCK 16" X 2	Used with Hi Float tires only	

(Applies to YP40 only)

This Page Intentionally Left Blank

Rear Hitch

(Applies to YP40 only)

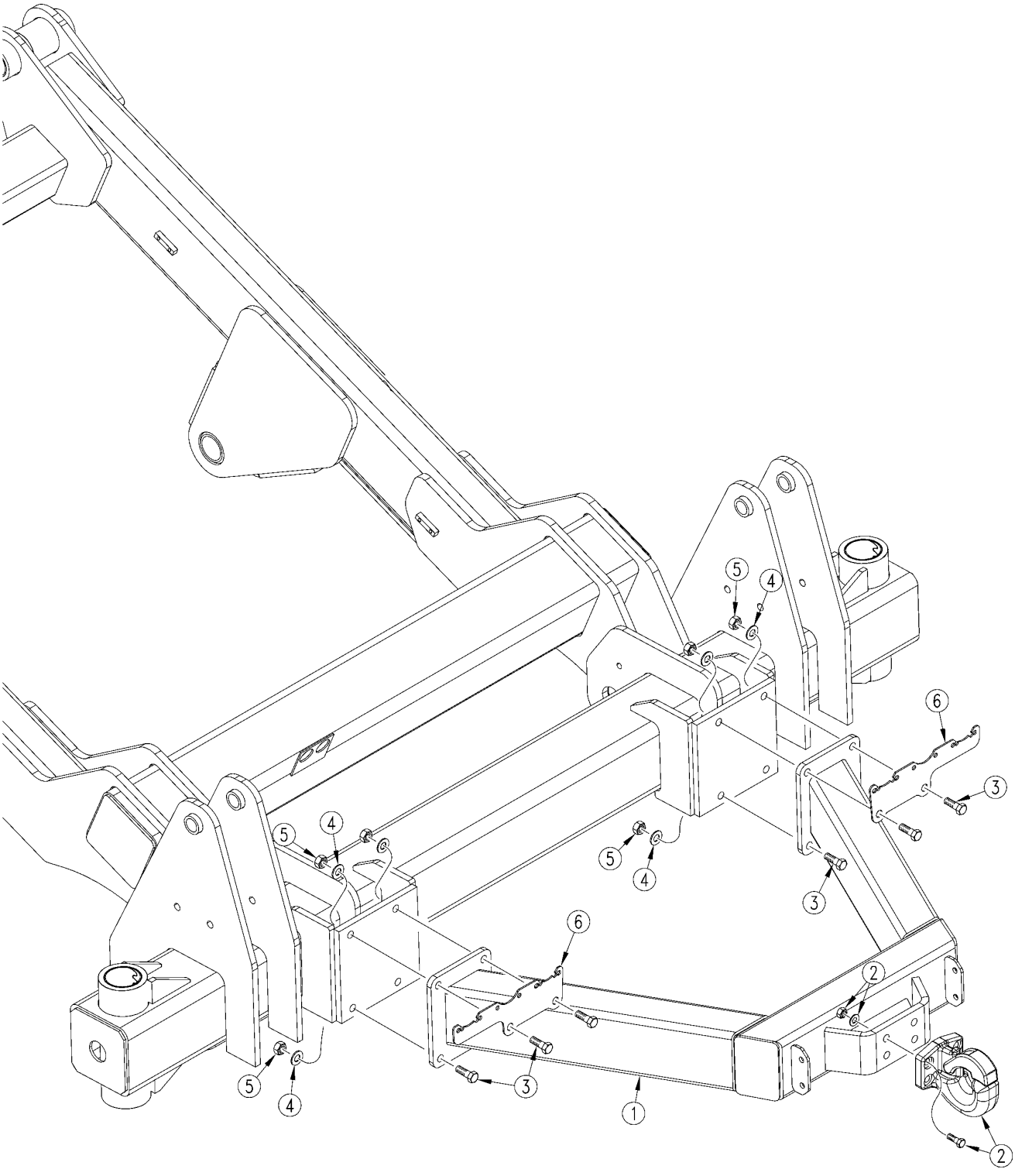

29163

Rear Hitch

(Applies to YP40 only)

Ref.	Part No.	Part Description	Comments	Revision
	dwg29163	Image No.		
1.	401-434H	TRAILER HITCH WLDMNT		
2.	890-955C	PINTLE HOOK 20 TON HEAVY DUTY		
3.	802-055C	HHCS 5/8-11X2 GR5		
4.	804-022C	WASHER LOCK SPRING 5/8 PLT		
5.	803-021C	NUT HEX 5/8-11 PLT		
6.	407-279D	FERT VALVE HOOKUP MOUNT		

Hopper Box to Frame

(Applies to YP40 only)

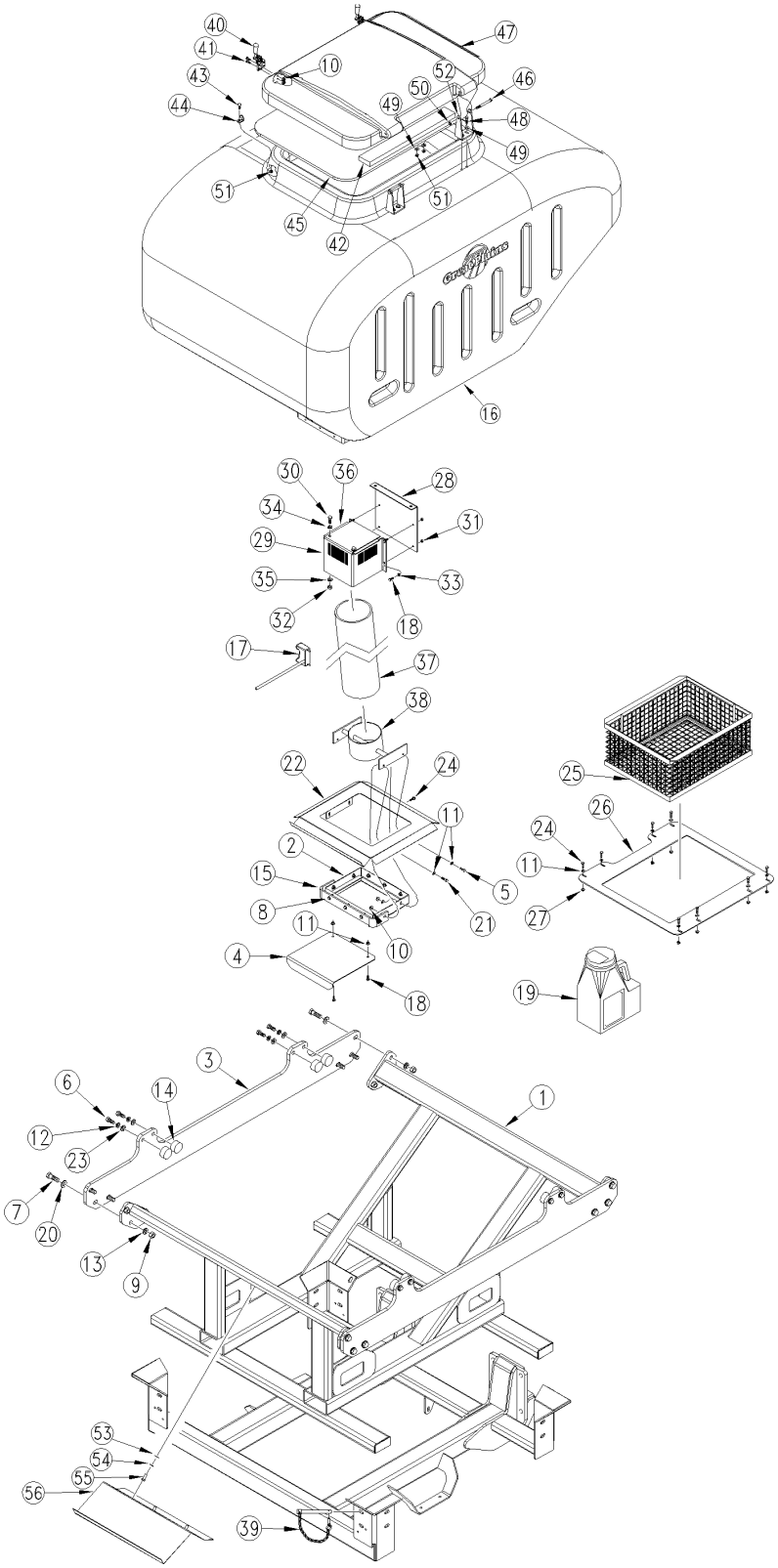

29175

Hopper Box to Frame

(Applies to YP40 only)

Ref.	Part No.	Part Description	Comments	Revision
	dwg 29175	Image No.		
1.	403-142H	BEAN HOPPER SUPPORT FRAME		
2.	403-159H	BULK HOPPER UNLOAD DOOR GUIDE		
3.	403-214D	HOPPER RETAINER SIDE BAR		
4.	403-234D	BULK HOPPER UNLOAD DOOR		
5.	802-167C	HHCS 1/4-20X1 1/2 GR5		
6.	802-034C	HHCS 1/2-13X1 1/4 GR5		
7.	802-055C	HHCS 5/8-11X2 GR5		
8.	802-224C	HHCS 1/4-20X1 1/4 GR5		
9.	803-021C	NUT HEX 5/8-11 PLT		
10.	803-088C	NUT HEX LOCK 1/4-20 FLG		
11.	804-007C	WASHER FLAT 1/4 SAE PLT		
12.	804-015C	WASHER LOCK SPRING 1/2 PLT		
13.	804-022C	WASHER LOCK SPRING 5/8 PLT		
14.	816-170C	RD BUMP STOP 2 X 1 X 1/2-13		
15.	816-477C	HOPPER DOOR TOP SEAL		
16.	817-556C	BULK PLANTER SEED HOPPER W/LID		
17.	833-235C	DJ BIN LEVEL SENSOR		
18.	802-004C	HHCS 1/4-20X3/4 GR5		
19.	821-048C	TALC LUBRICANT-5 GAL CONTAINER		
19.	821-069C	EZEE-GLIDE PLUS LUBRICANT-5GAL		
20.	804-021C	WASHER FLAT 5/8 SAE PLT		
21.	802-370C	HHCS 1/4-20X1 3/4 GR5		
22.	403-188H	HOPPER WATER GUARD WLDMNT		
23.	804-016C	WASHER FLAT 1/2 SAE PLT		
24.	802-005C	HHCS 1/4-20X1 GR5		
25.	807-182C	WIRE BASKET		
26.	403-332D	HOPPER STRAINER BASKET SUPPORT		
27.	803-230C	NUT HEX FLANGE 1/4-20 PLT		
28.	403-407D	BRACKET		
29.	403-408D	AIR TRANSFER TUBE CAP		
30.	802-080C	HHCS 7/16-14X1 GR5		
31.	803-006C	NUT HEX 1/4-20 PLT		
32.	803-015C	NUT HEX 7/16-14 PLT		
33.	804-006C	WASHER LOCK SPRING 1/4 PLT		
34.	804-014C	WASHER LOCK 7/16 PLT		
35.	804-041C	WASHER FLAT 7/16 SAE PLT		
36.	816-245C	RUBBER GUARD REAR CTR.OUTER		
37.	403-403D	82 BU AIR PRESSURE PIPE		
38.	403-241H	LOWER AIR PIPE SUPPORT 82 YP		
39.	805-034C	PIN HITCH 1/2 X 6 1/4 W CHAIN		
40.	800-418C	DESTACO 331-R CLAMP ASSEMBLY		
41.	802-001C	HHCS 1/4-20X3/4 SS		
42.	816-726C	BIN LID SEAL SPACER		
43.	802-282C	RHSNB 5/16-18X1 GR5		
44.	403-788D	82 BIN LID LATCH HOOK PLT		
45.	816-725C	BIN LID SEAL		
46.	802-026C	HHCS 3/8-16X3 3/4 GR5		
47.	817-558C	LID, BULK PLANTER SEED HOPPER		
48.	802-010C	HHCS 5/16-18X1 1/4 GR5		
49.	804-010C	WASHER FLAT 5/16 USS PLT		
50.	803-078C	NUT LOCK 3/8-16 NYLON INSERT		
51.	803-177C	NUT HEX FLG TP LK 5/16-18ZNYCR		
52.	403-228H	LID HINGE YP BULK HOPPER SHORT		
53.	804-012C	WASHER FLAT 3/8 SAE PLT		
54.	804-013C	WASHER LOCK SPRING 3/8 PLT		
55.	802-017C	HHCS 3/8-16X1 GR5		
56.	403-948D	HOPPER RAIN SHIELD		

Air Box

(Applies to YP40 only)

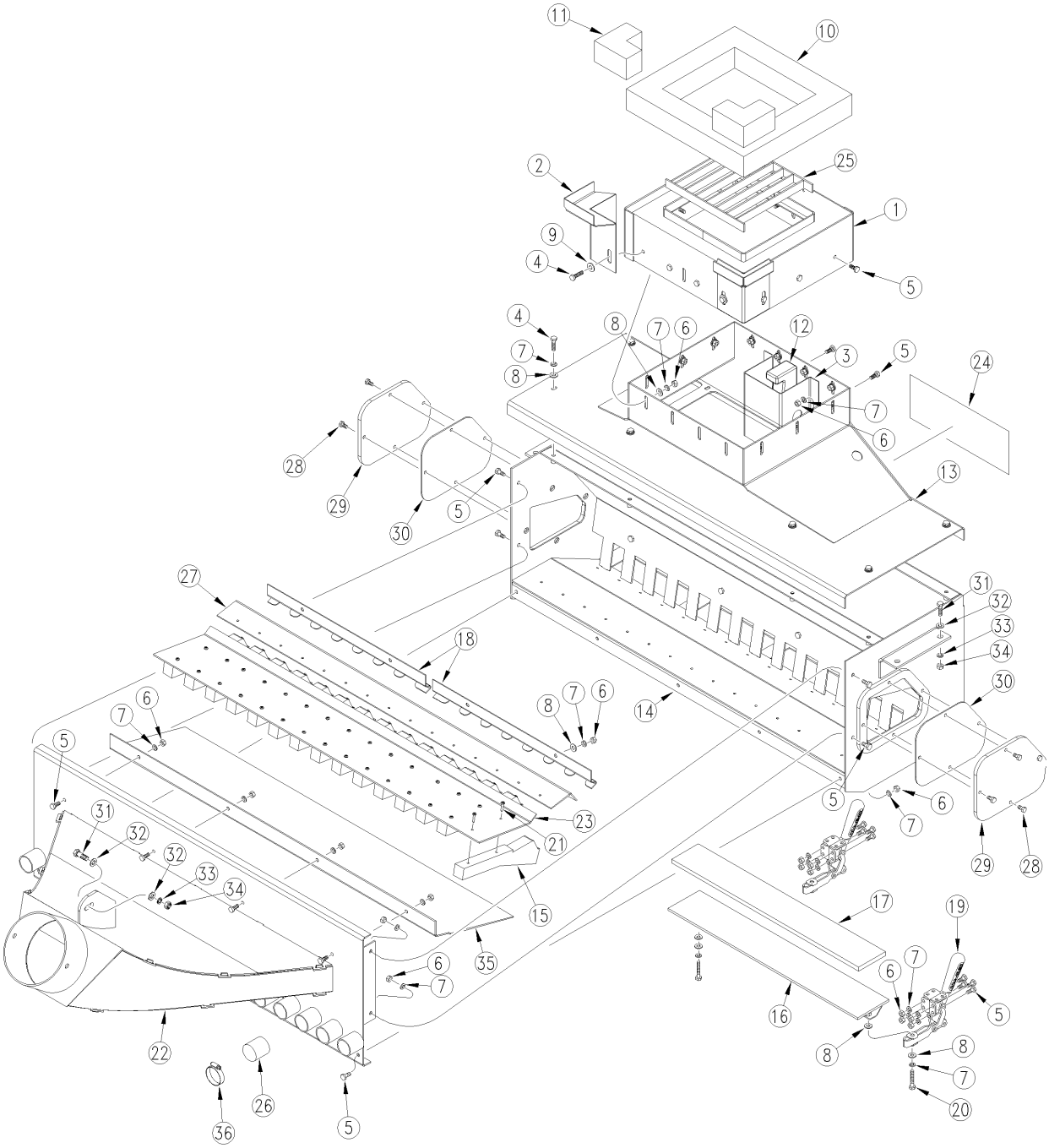

27171

Air Box

(Applies to YP40 only)

Ref.	Part No.	Part Description	Comments	Revision
	dwg27171	Image No.		
1.	403-165H	SEAL HOLDER WELDMENT		
2.	403-166H	CORNER SEAL MOUNT WLDMNT		
3.	403-248D	HOPPER LEVEL SENSOR SHROUD		
4.	802-005C	HHCS 1/4-20X1 GR5		
5.	802-078C	HHCS 1/4-20X5/8 GR5		
6.	803-006C	NUT-HEX 1/4-20 PLT		
7.	804-006C	WASHER LOCK SPRING 1/4 PLT		
8.	804-007C	WASHER FLAT 1/4 SAE PLT		
9.	804-075C	WASHER FLAT 1/4 USS PLT		
10.	816-478C	AUX METER TOP SEAL		
11.	816-479C	SEAL TOP CORNER		
12.	833-235C	D-J HOPPER LEVEL SENSOR		
13.	403-239H	WIDE FILL TOP WELDMENT		
14.	403-237H	RICE MANIFOLD MAIN WELDMENT		
15.	403-396D	RICE MANIFOLD SPACER SEPERATOR		
16.	403-186H	MANIFOLD UNLOAD DOOR		
17.	816-502C	DOOR SEAL, PLANTER MANIFOLD		
18.	403-317D	SEED CHAMBER DIVIDER LH		
18.	403-318D	SEED CHAMBER DIVIDER RH		
19.	800-179C	DESTACO HOLD DOWN ACTION CLAMP		
20.	802-167C	HHCS 1/4-20X1 1/2 GR5		
21.	801-187C	SCREW SPAX #8X3/4 PAN HEAD		
22.	403-236H	MANIFOLD INLET WIDE YP		
23.	403-177D	MANIFOLD TOP SLAT COVER		
24.	838-822C	DECAL TALC LUBRICANT YP		
25.	403-189H	SEED STRAINER GRATE WLDMNT		
26.	817-457C	CAP PLUG 1 1/2 O.D. TUBE		
27.	403-178D	MANIFOLD SLAT MOUNT PLT		
28.	802-705C	HHCS 5/16-18X5/8		
29.	403-345D	YP MANIFOLD ACCESS DOOR		
30.	816-548C	YP MANIFOLD ACCESS DOOR GASKET		
31.	802-079C	HHCS 3/8-16X1 1/4 GR5		
32.	804-011C	WASHER FLAT 3/8 USS PLT		
33.	804-013C	WASHER LOCK SPRING 3/8 PLT		
34.	803-014C	NUT HEX 3/8-16 PLT		
35.	403-402D	AIR FLOW UPPER GUIDE		
36.	800-124C	CLAMP WRM DRV #24 SS (1.06-2)		

Pro Box to Frame

(Applies to YP40 only)

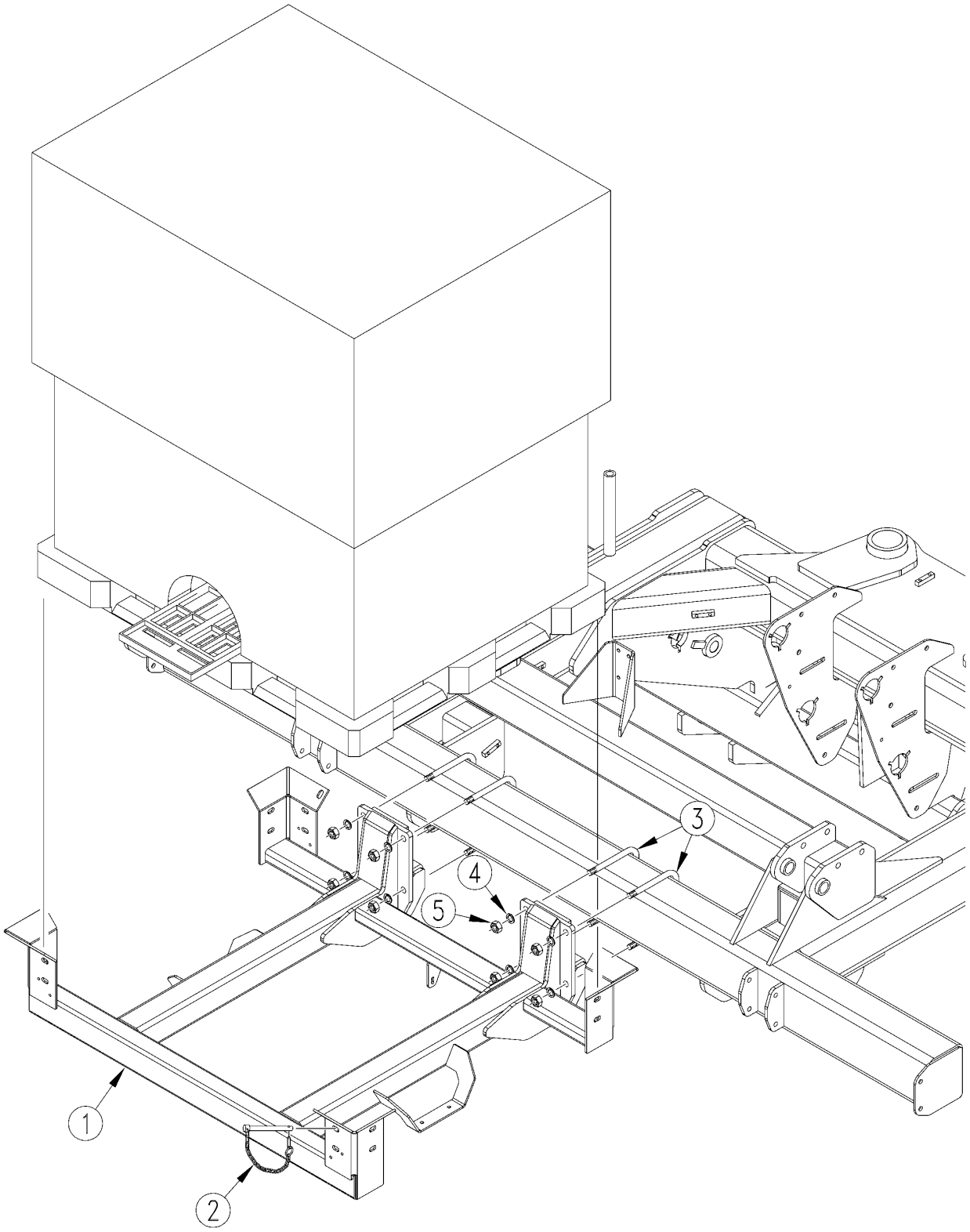

29176

Pro Box to Frame

(Applies to YP40 only)

Ref.	Part No.	Part Description	Comments	Revision
	dwg 29176	Image No.		
1.	403-229H	YP HOPPER SUPPORT FRAME		
2.	805-034C	PIN HITCH 1/2 X 6 1/4 W CHAIN		
3.	806-055C	U-BOLT 3/4-10 X 7 1/32 X 7		
4.	804-023C	WASHER LOCK SPRING 3/4 PLT		
5.	803-027C	NUT HEX 3/4-10 PLT		

150 BU Bulk Hopper

(Applies to YP40 only)

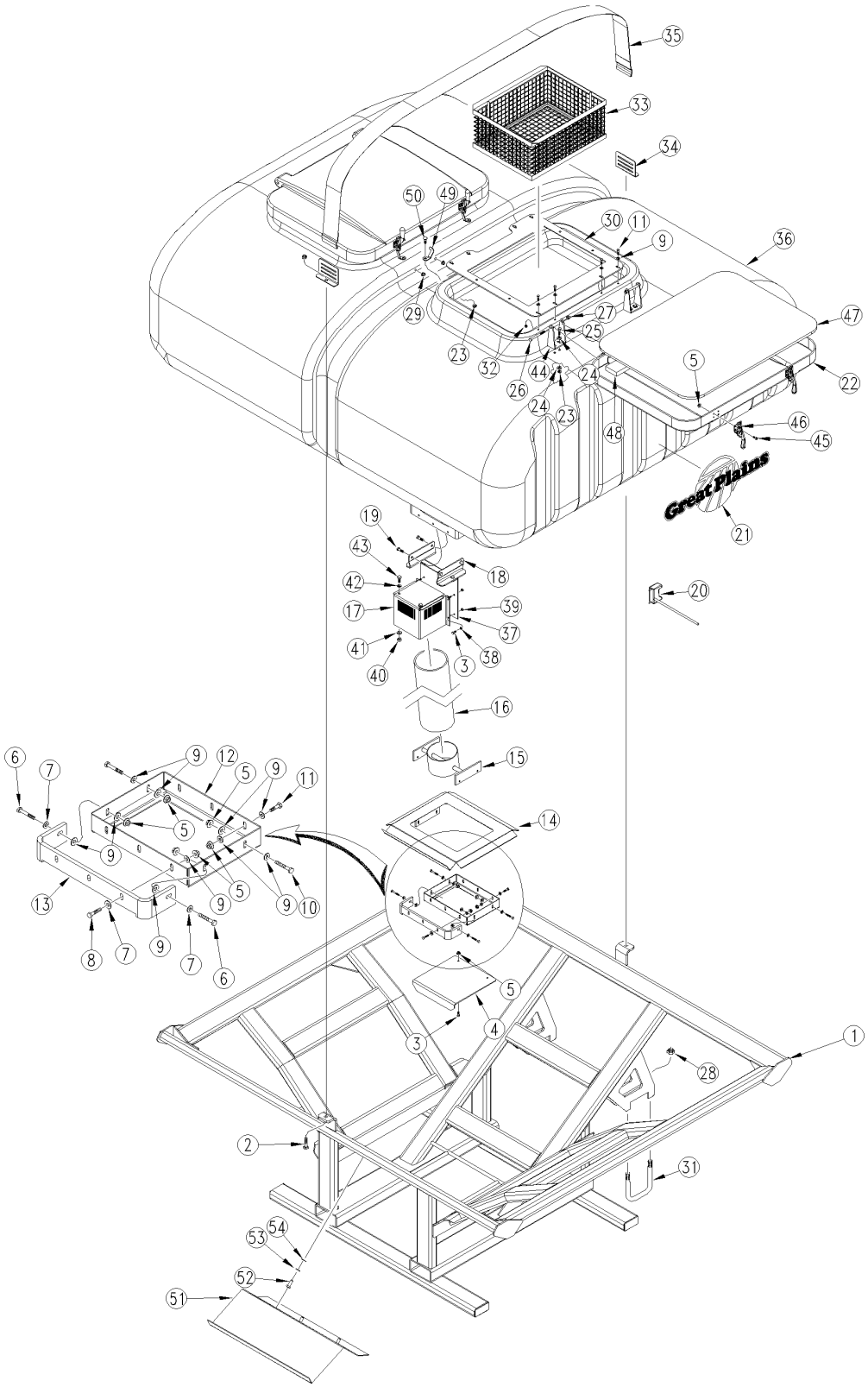

29171

150 BU Bulk Hopper

(Applies to YP40 only)

Ref.	Part No.	Part Description	Comments	Revision
	dwg29171	Image No.		
1.	401-554H	150 HOPPER SUPPORT WLDMT PH2		
2.	802-250C	RHSNB 1/2-13X2 1/4 GR5		
3.	802-004C	HHCS 1/4-20X3/4 GR5		
4.	403-234D	BULK HOPPER UNLOAD DOOR		
5.	803-088C	NUT HEX LOCK 1/4-20 FLG		
6.	802-370C	HHCS 1/4-20X1 3/4 GR5		
7.	804-075C	WASHER FLAT 1/4 USS PLT		
8.	802-224C	HHCS 1/4-20X1 1/4 GR5		
9.	804-007C	WASHER FLAT 1/4 SAE PLT		
10.	802-167C	HHCS 1/4-20X1 1/2 GR5		
11.	802-005C	HHCS 1/4-20X1 GR5		
12.	403-159H	BULK HOPPER UNLOAD DOOR GUIDE		
13.	816-477C	HOPPER DOOR TOP SEAL		
14.	403-188H	HOPPER WATER GUARD WLDMNT		
15.	403-241H	LOWER AIR PIPE SUPPORT 82 YP		
16.	403-427D	150 BU AIR PRESSURE PIPE		
17.	403-242S	UPPER PIPE SUPPORT WELDMENT		
18.	403-409D	BRACKET ANGLE WITH HOLES		
19.	802-079C	HHCS 3/8-16X1 1/4 GR5		
20.	833-235C	DJ HOPPER LEVEL SENSOR		
21.	838-229C	DECAL GREAT PLAINS ON LOGO LRG		
22.	817-558C	LID, BULK PLANTER SEED HOPPER		
23.	803-177C	NUT HEX FLG TP LK 5/16-18ZNYCR		
24.	804-010C	WASHER FLAT 5/16 USS PLT		
25.	802-010C	HHCS 5/16-18X1 1/4 GR5		
26.	802-026C	HHCS 3/8-16X3 3/4 GR5		
27.	803-078C	NUT LOCK 3/8-16 NYLON INSERT		
28.	803-024C	NUT LOCK 5/8-11 PLT		
29.	803-209C	NUT FLANGE LOCK 3/8-16 PLT		
30.	403-332D	HOPPER STRAINER BASKET SUPPORT		
31.	806-044C	U-BOLT 5/8-11 X 5 1/32 X 6 GR5		
32.	803-230C	NUT HEX FLANGE 1/4-20 PLT		
33.	807-182C	WIRE BASKET		
34.	503-158D	TANK STRAP ATTACHMENT PLATE		
35.	403-303D	4 IN NYLON STRAP FOR 150BU BIN		
36.	817-602C	150 BU SEED HOPPER NO LID		
37.	403-407D	BRACKET		
38.	804-006C	WASHER LOCK SPRING 1/4 PLT		
39.	803-006C	NUT HEX 1/4-20 PLT		
40.	803-015C	NUT HEX 7/16-14 PLT		
41.	804-041C	WASHER FLAT 7/16 SAE PLT		
42.	804-014C	WASHER LOCK 7/16 PLT		
43.	802-080C	HHCS 7/16-14X1 GR5		
44.	403-179H	LID HINGE YP BULK HOPPER		
45.	802-001C	HHCS 1/4-20X3/4 SS		
46.	800-418C	DESTACO 331-R CLAMP ASSEMBLY		
47.	816-725C	BIN LID SEAL		
48.	816-726C	BIN LID SEAL SPACER		
49.	403-789D	150 BIN LID LATCH HOOK PLT		
50.	802-282C	RHSNB 5/16-18X1 GR5		
51.	403-948D	HOPPER RAIN SHIELD		
52.	802-017C	HHCS 3/8-16X1 GR5		
53.	804-013C	WASHER LOCK SPRING 3/8 PLT		
54.	804-012C	WASHER FLAT 3/8 SAE PLT		

Seed Delivery

(Applies to YP40 only)

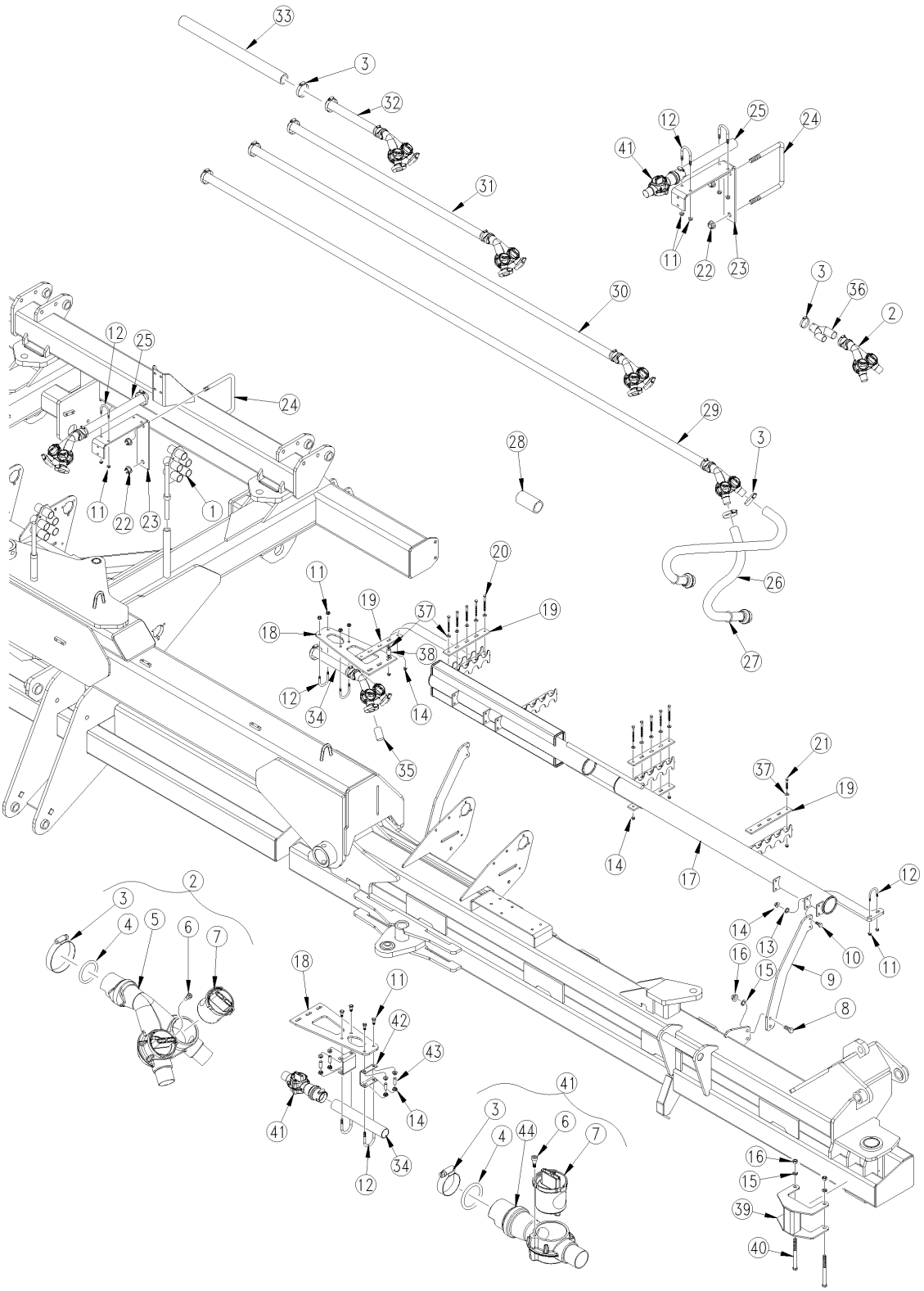

29213

Seed Delivery

(Applies to YP40 only)

Ref.	Part No.	Part Description	Comments	Revision
	dwg29213	Image No.		
1.	401-553H	HOSE GUIDE WLDMT SHORT		
2.	401-251S	PLANTER Y-TRANSITION ASY	Includes items 3-7	
3.	800-124C	CLAMP WRM DRV #24 SS (1.06-2)		
4.	816-499C	O-RING 1 1/2 IDX1 7/8 ODX3/16		
5.	401-719D	AIR PLANTER HOSE SPLITTER		
6.	802-481C	SHOULDER BOLT 1/4X1/4X10-24		
7.	817-595C	Y-TUBE GATE		
8.	802-034C	HHCS 1/2-13X1 1/4 GR5		
9.	403-553D	BRACKET AIR TUBES SUPPORT		
10.	802-159C	HHCS 5/16-18X1 GR5		
11.	803-177C	NUT HEX FLG TP LK 5/16-18ZNYCR		
12.	806-192C	U-BOLT 5/16-18X1 1/2X2 1/2 RND		
13.	804-009C	WASHER LOCK SPRING 5/16 PLT		
14.	803-008C	NUT HEX 5/16-18 PLT		
15.	804-015C	WASHER LOCK SPRING 1/2 PLT		
16.	803-020C	NUT HEX 1/2-13 PLT		
17.	401-552H	WING AIR PIPE SUPPPORT 16		
18.	403-354D	AUX SUPPORT PLATE INNER		
19.	401-800D	BRACKET SEED TUBE SUPPORT (4)		
20.	802-578C	HHCS 5/16-18X5 GR5		
21.	802-197C	HHCS 5/16-18X2 3/4 GR5		
22.	803-263C	NUT HEX FLANGE LOCK 5/8-11 PLT		
23.	403-361D	AIR TUBE HOLDER CENTER		
24.	806-053C	U-BOLT 5/8-11 X 7 1/32 X 6 1/2		
25.	827-099C	SEED DELIVERY TUBE 014.5 AL		
26.	817-613C	SEED DISCHARGE HOSE 42		
27.	817-610C	HOSE BOOT LOCK RING		
28.	403-306D	HOSE COUPLER 30 IN YP		
29.	827-078C	SEED DELIVERY TUBE 114 AL		
29.	827-077C	SEED DELIVERY TUBE 144 AL	Used on 3215 Spacing Only	
30.	827-079C	SEED DELIVERY TUBE 84 AL		
31.	827-080C	SEED DELIVERY TUBE 54 AL		
32.	827-081C	SEED DELIVERY TUBE 24 AL		
33.	990-230R	HOSE 1 1/2 HI-TECH UFD-AP		
34.	827-084C	TUBE SEED DELIVERY 10 AL		
35.	817-622C	TUBE CAP 1 1/4 ID TB X 3 LG		
36.	403-246H	TUBE SPLITTER 1.5/1.25/1.5		
37.	804-010C	WASHER FLAT 5/16 USS PLT		
38.	402-420D	IDLER SPACER		
39.	401-870H	YP30/40 WING LOCK OFFSET		
40.	802-047C	HHCS 1/2-13X6 GR5		
41.	401-955S	AIR PLANTER HOSE ADPTR W/GATE	Includes items 3, 4, 6, 7 & 44	
42.	403-830D	OFFSET HOSE SUPPORT BRACKET		
43.	817-614C	CAPLUG, VC-281-16		
44.	421-134D	AIR PLANTER HOSE ADPTR W/GATE		

Walkboard and Ladder

(Applies to YP40 only)

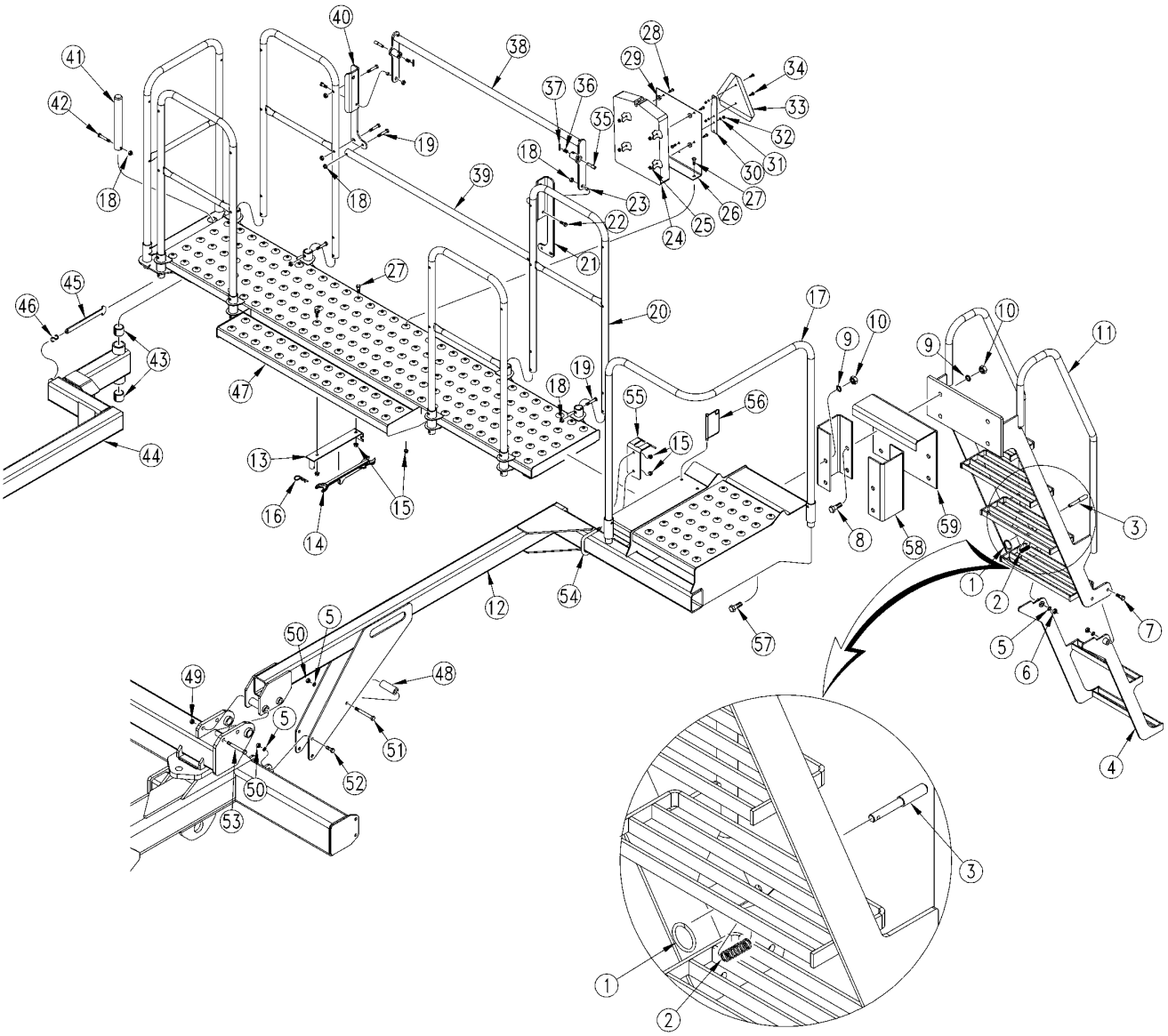

31362

Walkboard and Ladder

(Applies to YP40 only)

Ref.	Part No.	Part Description	Comments	Revision
	dwg31362	Image No.		
1.	800-051C	RING, SPLIT 1-1/4 I.D.		
2.	807-087C	SPRING COMP 1/2 OD X .052 W		
3.	166-690D	PLUNGER LOCK PIN		
4.	401-438H	FLIP DOWN LADDER		
5.	804-015C	WASHER LOCK SPRING 1/2 PLT		
6.	803-020C	NUT HEX 1/2-13 PLT		
7.	802-128C	HHCS 1/2-13X2 GR5		
8.	802-392C	HHCS 3/4-10X1 3/4 GR5		
9.	804-023C	WASHER LOCK SPRING 3/4 PLT		
10.	803-027C	NUT HEX 3/4-10 PLT		
11.	401-427H	YP24 REAR LADDER WELDMENT		
12.	401-557H	WALKBOARD END SUPT WLDMNT		
13.	403-175H	WRENCH HOLDER		
14.	403-265D	SPRING AND WHEEL WRENCH		
15.	803-209C	NUT FLANGE LOCK 3/8-16 PLT		
16.	805-088C	PIN, HAIR COTTER 3/16 WIRE DIA		
17.	411-518D	HANDRAIL CORNER PLATFORM		
18.	803-013C	NUT LOCK 3/8-16 PLT		
19.	802-143C	HHCS 3/8-16X2 GR5		
20.	401-255H	HOOP HANDRAIL WELDMENT		
21.	401-743D	RAIL PIVOT MOUNT LH		
22.	802-079C	HHCS 3/8-16X1 1/4 GR5		
23.	119-278D	WALKBOARD LADDER PIVOT BUSHING		
24.	817-516C	MANUAL PAK 1" W/ GASKET		
25.	803-293C	NUT HEX FLG TL 1/4-20 ZNYCR		
26.	401-697D	YP SMV MANUAL PAK HANGER		
27.	802-388C	HFS 3/8-16X1 GR5		
28.	802-005C	HHCS 1/4-20X1 GR5		
29.	817-042C	MINI END WHEEL PRESS WHEEL		
30.	890-153C	SMV MOUNTING BLADE		
31.	804-009C	WASHER LOCK SPRING 5/16 PLT		
32.	803-008C	NUT HEX 5/16-18 PLT		
33.	818-055C	DECAL SLOW MOVING-GALV. BACKED		
34.	801-018C	SCREW RD HD 1/4-20 X 5/8		
35.	172-201D	6 BOLT LOCKOUT PLUNGER		
36.	807-096C	SPRING COMP 1/2 OD X 1 LG		
37.	805-062C	PIN ROLL 3/16 X 2 1/2 LG. PTL.		
38.	401-256H	UPPER RAIL WLDMNT		
39.	401-742D	TOP RAIL MIDDLE SECTION		
40.	401-744D	RAIL PIVOT MOUNT RH		
41.	113-797D	MARKER PIVOT PIN		
42.	802-216C	HHCS 3/8-16X2 3/4 GR5		
43.	890-264C	BUSHING 1 3/4 X 1 1/2 X 1 1/2		
44.	401-556H	WALKBOARD HINGE SUPT WLDMNT		
45.	411-462D	LATCH WALKBOARD HOLD OPEN		
46.	800-041C	S-HOOK #772 .177 X 1 1/8 PLT		
47.	401-253H	YP WALKBOARD WLDMMT		
48.	120-293D	TUBE RND DOM. 1 OD X 7/32WX3.0		
49.	803-024C	NUT LOCK 5/8-11 PLT		
50.	803-023C	NUT HEX JAM 5/8-11 PLT		
51.	802-413C	HHCS 1/2-13X4 1/2 GR5		
52.	802-091C	HHCS 1/2-13X1 1/2 GR5		
53.	802-335C	HHCS 5/8-11X6 1/2 GR5		
54.	806-138C	U-BOLT 3/8-16 X 4 1/32 X 3 3/4		
55.	411-587D	GUIDE PLATE RAIL TUBE		
56.	805-178C	PIN WIRE SNAP LOCK 3/8 X 3 1/2		
57.	802-184C	HHCS 3/4-10X1 1/2 GR5	Used with Hi Float tires only	

Walkboard and Ladder (continued)

(Applies to YP40 only)

Ref	Part No.	Part Description	Comments	Revision
58.	411-682D	LADDER SETBACK CHANNEL	Used with Hi Float tires only	
59.	411-514D	PLATE LADDER MOUNT FORMED	Used with Hi Float tires only	

Walkboard and Ladder (continued)

(Applies to YP40 only)

This Page Intentionally Left Blank

Fan to Frame

(Applies to YP40 only)

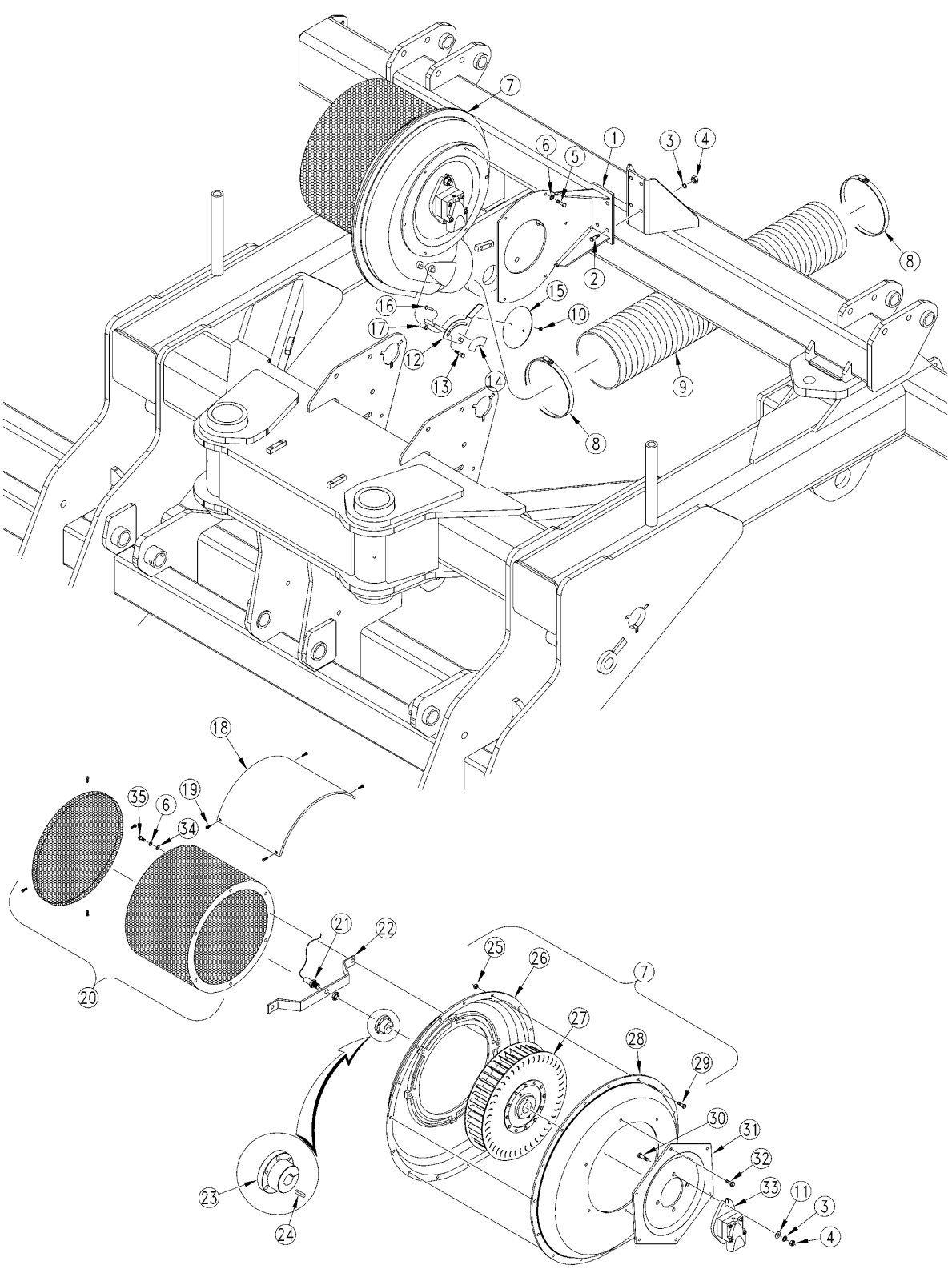

29181

Fan to Frame

(Applies to YP40 only)

Ref.	Part No.	Part Description	Comments	Revision
	dwg29181	Image No.		
1.	401-203H	YP FAN MOUNT WLDMNT		
2.	802-017C	HHCS 3/8-16X1 GR5		
3.	804-013C	WASHER LOCK SPRING 3/8 PLT		
4.	803-014C	NUT HEX 3/8-16 PLT		
5.	802-224C	HHCS 1/4-20X1 1/4 GR5		
6.	804-006C	WASHER LOCK SPRING 1/4 PLT		
7.	891-131C	6 HYD FAN W/CASE DRAIN MOTOR		
8.	800-151C	CLAMP WRM DRV #96SS (4.75-6.5)		
9.	816-409C	HOSE 6.0 ID DUCTING X 3.3 FT		
10.	803-268C	NUT HEX NYLOCK 10-24 PLT		
11.	804-012C	WASHER FLAT 3/8 SAE PLT		
12.	401-363H	CRARY FAN SHUTTER		
13.	802-167C	HHCS 1/4-20X1 1/2 GR5		
14.	848-020C	DECAL FAN BAFFLE INDEX		
15.	411-030D	CRARY FAN SHUTTER DISK		
16.	801-055C	SCREW RD HD 10-24 X 1 PLT		
17.	403-338D	METER SPACER TUBE		
18.	817-624C	FAN INLET RAIN SHIELD		
19.	802-800C	HWH #12-14X3/4		
20.	890-624C	SCREEN FAN COVER		
21.	466970014S1	DJ FAN RPM SENSOR THRD HALL		
22.	401-537D	DJ FAN SENSOR MOUNT BRKT		
23.	890-891C	BUSHING, JA X 20 MM		
24.	800-373C	SQ KEY 6MM X 35MM		
25.	803-230C	NUT HEX FLANGE 1/4-20 PLT		
26.	21121	6 FAN HOUSING RH SIDE		
27.	17089	13 FAN IMPELLER		
28.	23320	6 FAN HOUSING LH SIDE		
29.	802-167C	HHCS 1/4-20X1 1/2 GR5		
30.	802-079C	HHCS 3/8-16X1 1/4 GR5		
31.	890-899C	VOLVO HYD MOTOR MOUNT PLT		
32.	801-081C	SCREW HEX SELF TAP 1/4-20X3/4		
33.	810-556C	PARKER F-11 FAN MOTOR		
34.	804-075C	WASHER FLAT 1/4 USS PLT		
35.	802-005C	HHCS 1/4-20X1 GR5		

Lift Switch Mount (S/N B1057A-)

(Applies to YP40 only)

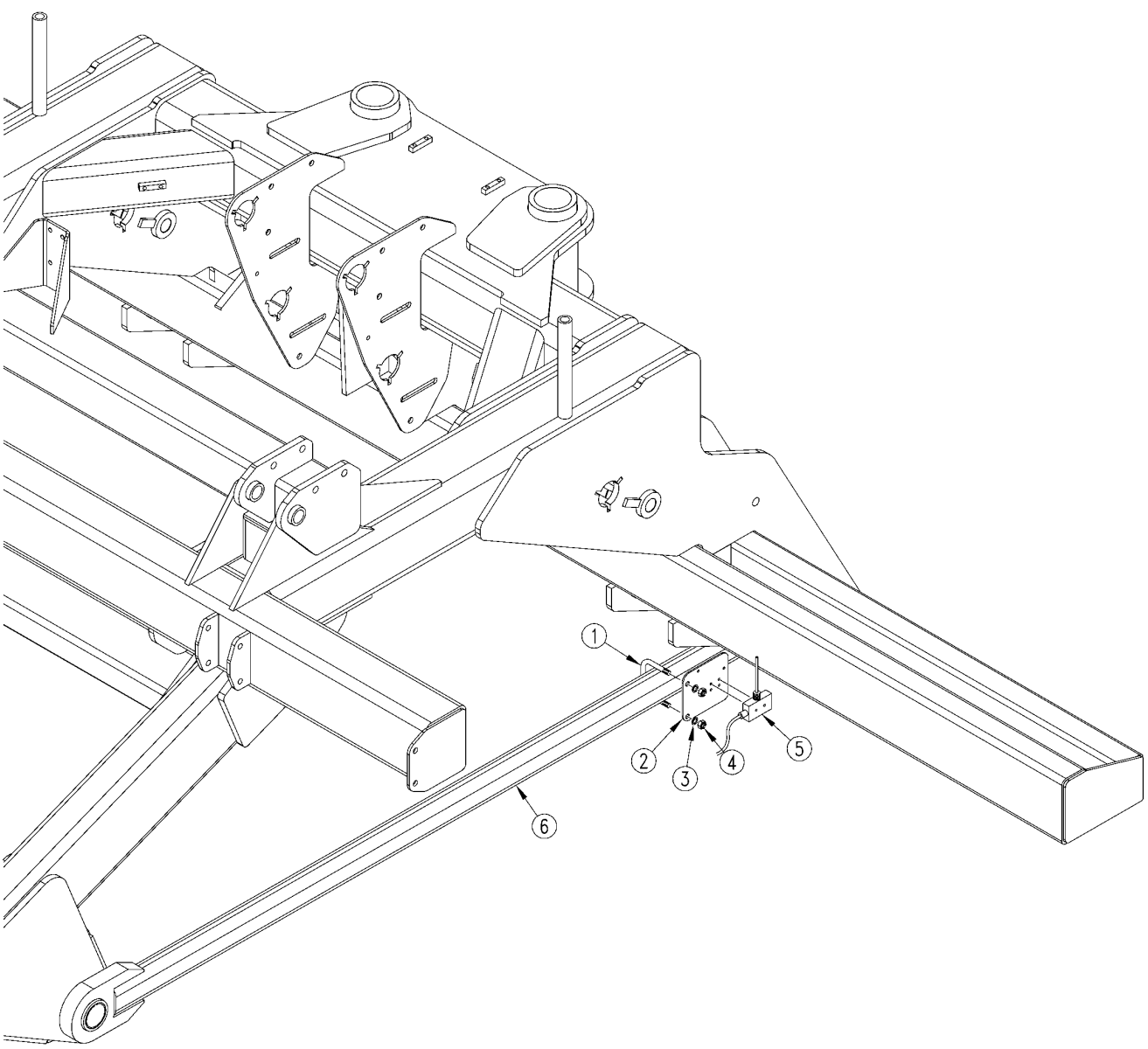

29180

Lift Switch Mount (S/N B1057A-)

(Applies to YP40 only)

Ref.	Part No.	Part Description	Comments	Revision
	dwg29180	Image No.		
1.	806-132C	U-BOLT 3/8-16 X 3 1/32 X 2 3/4		
2.	411-337D	LIFT SWITCH MOUNT PLATE YP24		
2.	411-602D	LIFT SWITCH MOUNT PLT 7_5	Use with 7 1/2" & 8" spacing	
3.	804-013C	WASHER LOCK SPRING 3/8 PLT		
4.	803-014C	NUT HEX 3/8-16 PLT		
5.	464820520S1	DJ SWITCH SPDT W/WISKER & WIRE		
6.	401-431H	YP24 LIFT ASSIST LINK	Use with 10" spacing	
6.	401-558H	LIFT LINK OFFSET NARROW ROW	Use with 15", 20", 30" & 30"TR spacing	
6.	401-590H	7.5 AXLE LINK WLDMT YP	Use with 7 1/2" & 8" spacing	

Lift Switch Mount (S/N B1058A+)

(Applies to YP40 only)

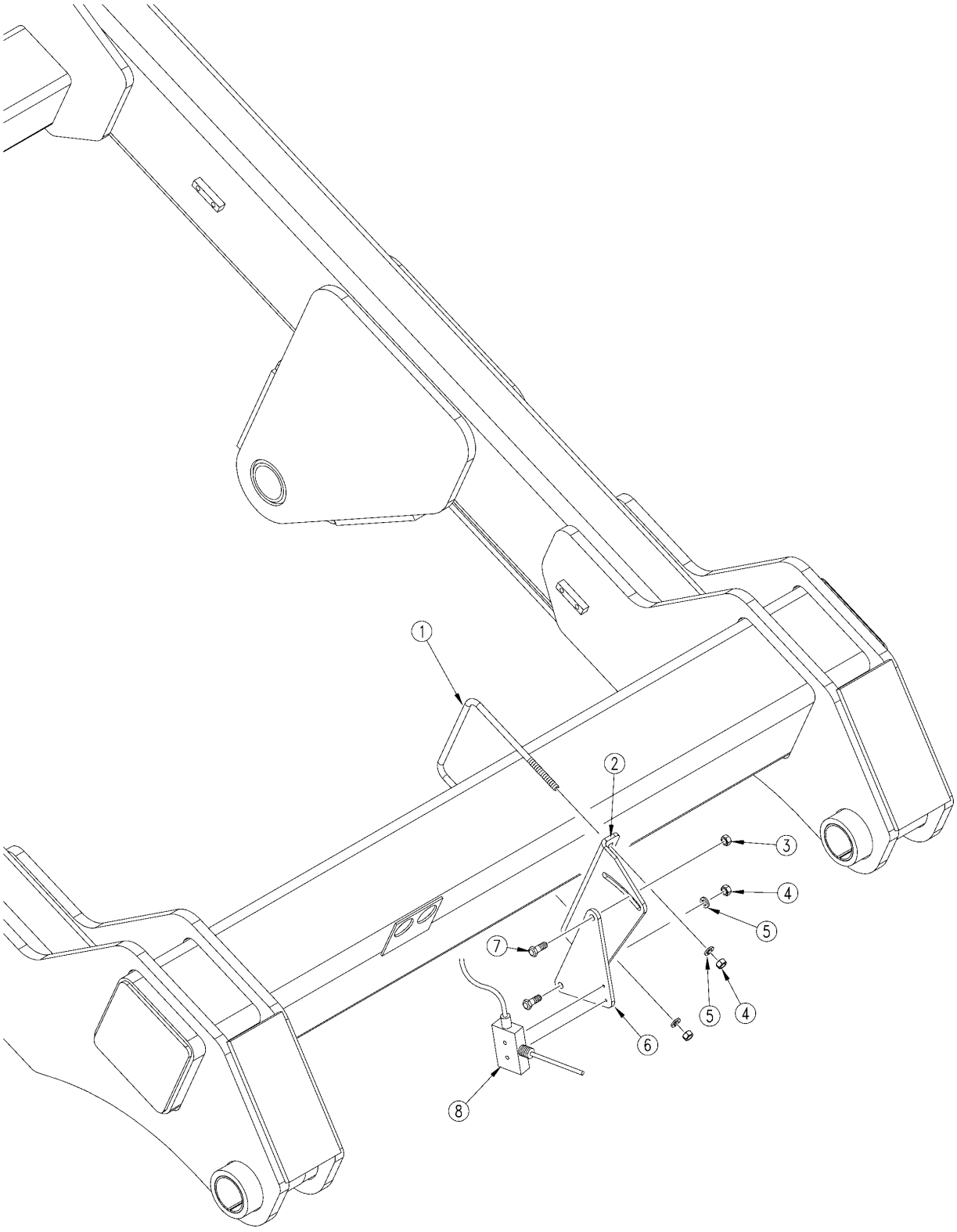

32352

Lift Switch Mount (S/N B1058A+)

(Applies to YP40 only)

Ref.	Part No.	Part Description	Comments	Revision
	dwg32352	Image No.		
1.	806-073C	U-BOLT 3/8-16 X 7 1/32 X 7 7/8		
2.	411-780D	LIFT SWITCH MNT PLT		
3.	803-209C	NUT FLANGE LOCK 3/8-16 PLT		
4.	803-014C	NUT HEX 3/8-16 PLT		
5.	804-014C	WASHER LOCK 7/16 PLT		
6.	411-781D	LIFT SWITCH MNT ADJ PLT		
7.	802-017C	HHCS 3/8-16X1 GR5		
8.	464820520S1	DJ SWITCH SPDT W/WISKER & WIRE		

Row-Pro and Tru-Count Compressor Mounting

(Applies to YP40 only)

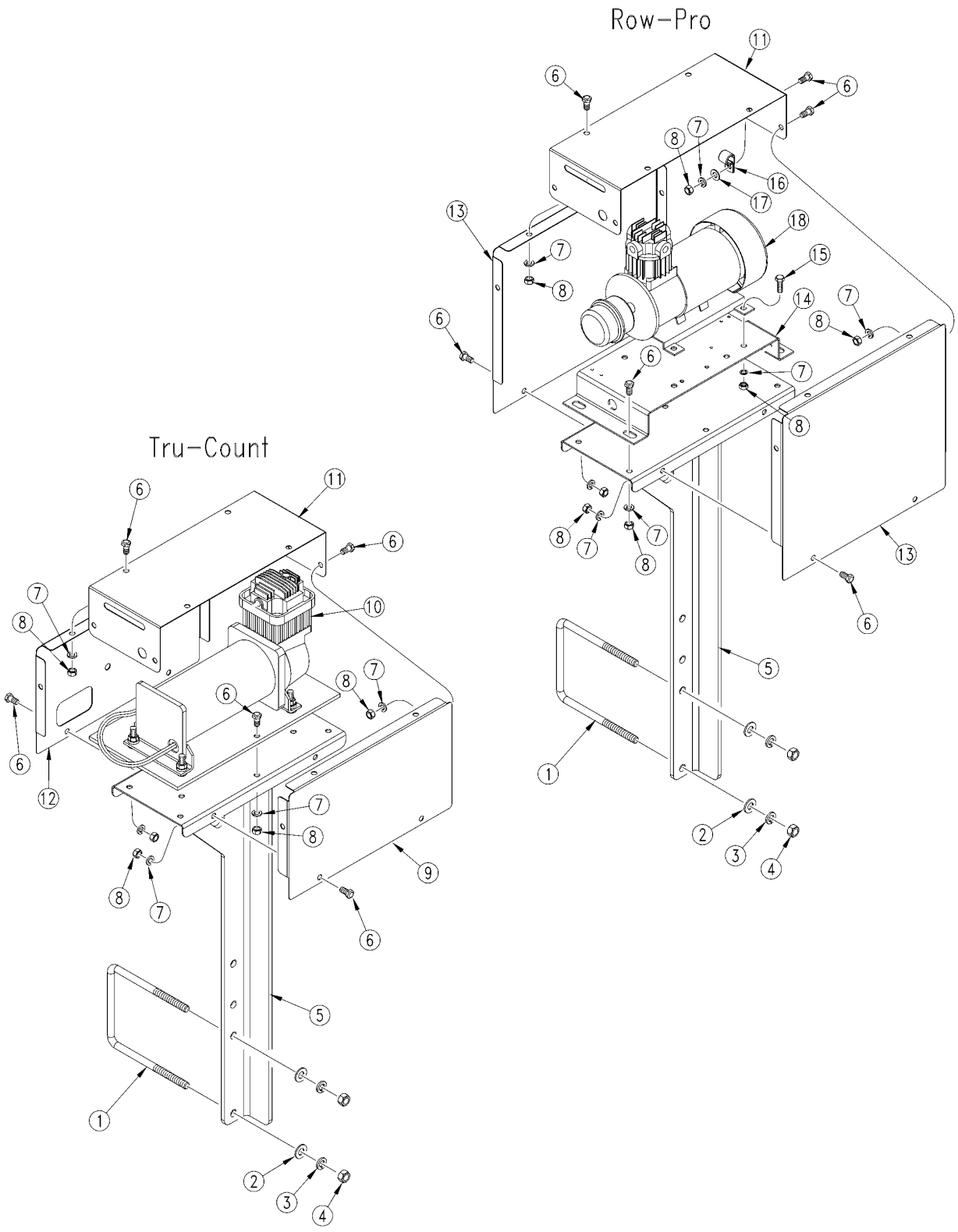

34090

Row-Pro and Tru-Count Compressor Mounting

(Applies to YP40 only)

Ref.	Part No.	Part Description	Comments	Revision
	dwg34090	Image No.		
1.	806-060C	U-BOLT 1/2-13 X 6 1/32 X 7 1/4		
2.	804-016C	WASHER FLAT 1/2 SAE PLT		
3.	804-015C	WASHER LOCK SPRING 1/2 PLT		
4.	803-020C	NUT HEX 1/2-13 PLT		
5.	404-861H	12V COMP MOUNT WELDMENT		
6.	802-014C	HHCS 3/8-16X3/4 GR5		
7.	804-013C	WASHER LOCK SPRING 3/8 PLT		
8.	803-014C	NUT HEX 3/8-16 PLT		
9.	404-227D	TC COMPRESSOR COVER SIDE L		
10.	823-330C	TRU-COUNT COMPRESSOR ASSEMBLY		
11.	404-225D	12 COMPRESSOR COVER TOP		
12.	404-226D	TC COMPRESSOR COVER SIDE R		
13.	404-224D	RP COMPRESSOR COVER SIDE		
14.	404-209D	COMPRESSOR MOUNT		
15.	802-017C	HHCS 3/8-16X1 GR5		
16.	800-052C	HOSE CLIP 5/8 I.D.		
17.	804-012C	WASHER FLAT 3/8 SAE PLT		
18.	831-088C	12V AIR COMPRESSOR		
19.	002-102ST	EXTREME AIR FILTER HOUSING	Not shown. Air filter for 831-088C.	

Lights

(Applies to YP40 only)

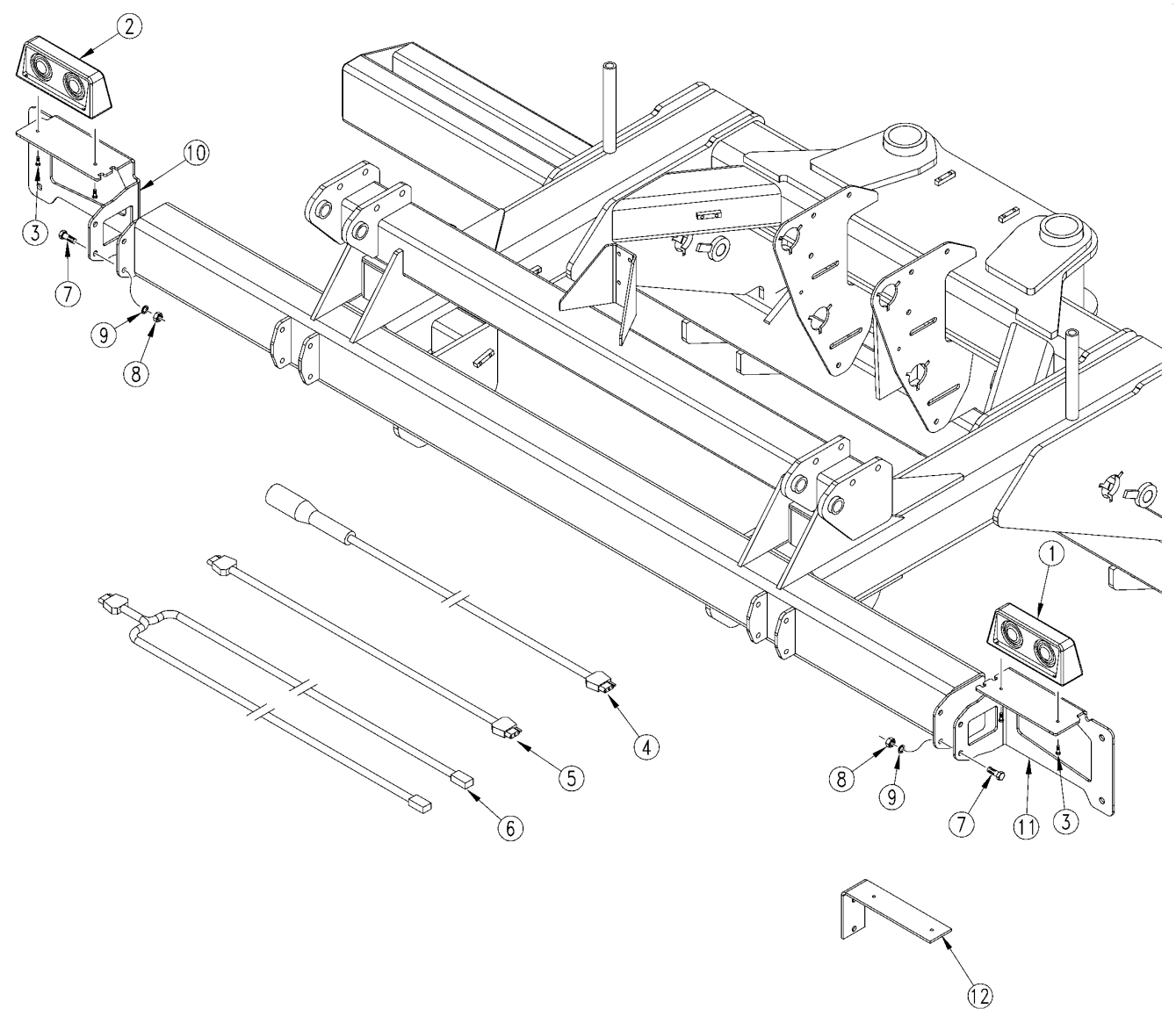

29863

Lights

(Applies to YP40 only)

Ref.	Part No.	Part Description	Comments	Revision
	dwg29863	Image No.		
1.	890-312C	DUAL AG LIGHTS RH		
2.	890-311C	DUAL AG LIGHTS LH		
3.	801-151C	SCR HEX SELF TAP 1/4-20X1TYPEF		
4.	890-431C	LIGHT HARNESS, 35' LEAD		
5.	890-600C	AG LIGHT HARNESS, EXT-15'		
6.	890-430C	LIGHT HARNESS, 20' WISHBONE		
7.	802-091C	HHCS 1/2-13X1 1/2 GR5		
8.	803-020C	NUT HEX 1/2-13 PLT		
9.	804-015C	WASHER LOCK SPRING 1/2 PLT		
10.	403-653D	BRACKET, Y TUBE, LIGHT LH		
11.	403-654D	BRACKET, Y TUBE, LIGHT RH		
12.	586-233D	LIGHT BRACKET	Used with 7 1/2" Spacing	

Gauge Wheels

(Applies to YP40 only)

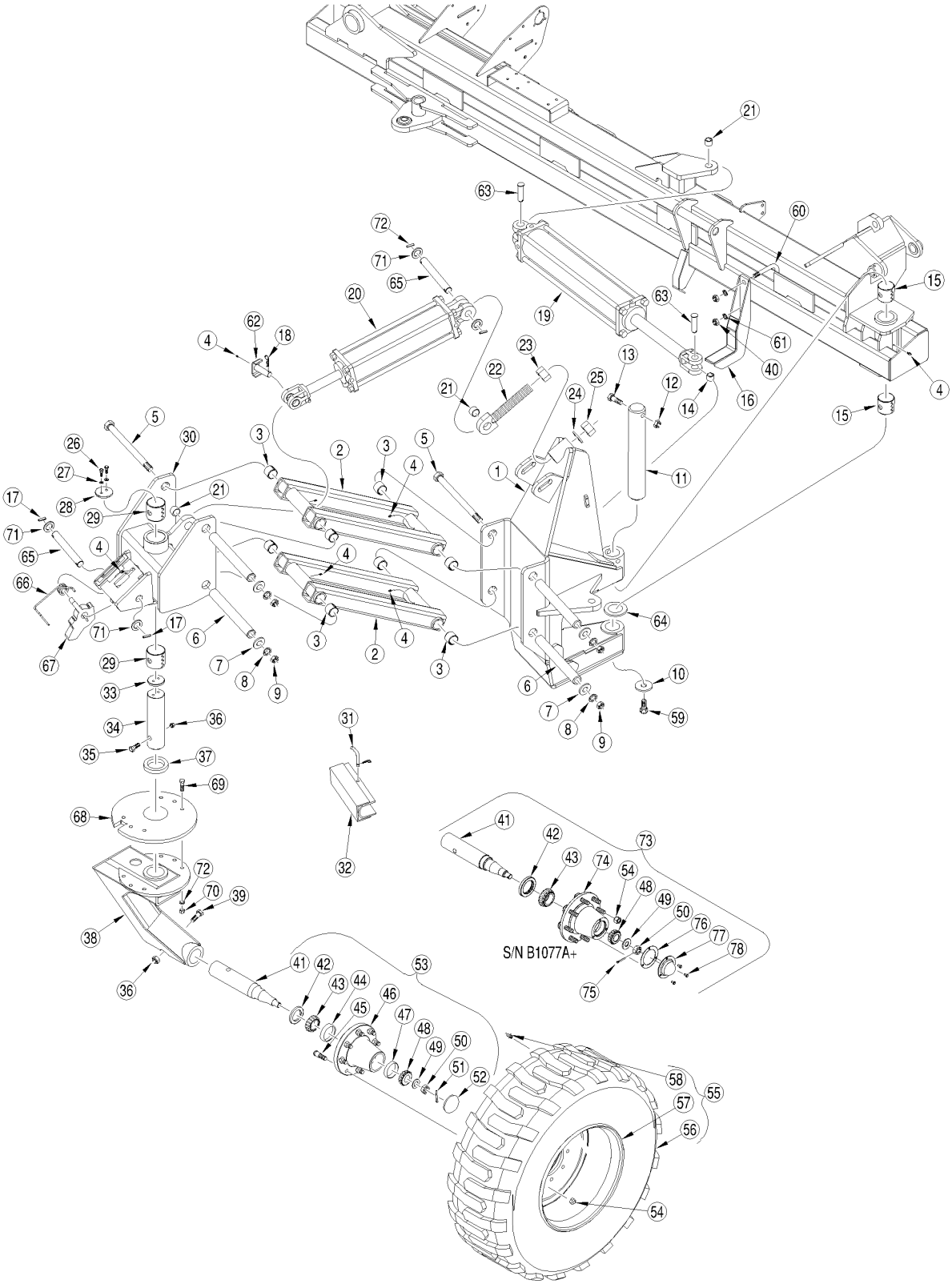

29263

Gauge Wheels

(Applies to YP40 only)

Ref.	Part No.	Part Description	Comments	Revision
	dwg29263	Image No.		
1.	401-551H	16ROW SWIVEL CASTER P2		
2.	402-172H	16R PARALLEL ARM WLDMNT 2		
3.	890-666C	BUSHING 1 7/8X1 5/8X1 1/2 SPLT		
4.	800-001C	GREASE ZERK STRAIGHT 1/4-28		
5.	802-728C	HHCS 1-8X18 GR5		
6.	196-654D	40P CASTER INNER PIVOT TUBE		
7.	804-029C	WASHER FLAT 1 SAE		
8.	804-027C	WASHER LOCK SPRING 1 PLT		
9.	803-031C	NUT HEX 1-8 PLT		
10.	318-508D	WASHER 3.5ODX1.03ID .38THK.		
11.	411-300D	PIVOT PIN 2.50		
12.	803-024C	NUT LOCK 5/8-11 PLT		
13.	802-060C	HHCS 5/8-11X4 GR5		
14.	890-005C	BUSHING CYL 1 1/4 X 1 X 1		
15.	890-725C	BUSHING 3 X 2 1/2 X 2 CONNEX		
16.	401-439H	FRONT TRANSPORT REST WLDMNT		
17.	805-249C	PIN ROLL 3/8 X 2 PLT		
18.	805-060C	PIN COTTER 7/32 X 2		
19.	810-606C	CYL REP 4X24X1 1/2 ROD RH	(RH Cylinder) Refer to "Hydraulic Cylinder (810-606C 4x24x1.5 Rod)" for breakdown	
19.	810-674C	CYL REP 4X24X1 1/2 ROD LH	(LH Cylinder) Refer to "Hydraulic Cylinder (810-674C 4x24x1.5 Rod)" for breakdown	
20.	810-651C	CYL REP 4.75X14X1.5 R TIE SPCL	(S/N B1057A-) Refer to "Hydraulic Cylinder (810-651C 4.75x14x1.5 Rod)" for breakdown	
20.	810-834C	CYL REP 4.5 X14.38X1.5 R (TIE)	(S/N B1058A+) Refer to "Hydraulic Cylinder (810-834C 4.5x14.38x1.5 Rod)" for breakdown	
20.	810-497C	CYL REP 4.75X16X1.5 ROD (TIE)	(S/N B1057A-) (Used with Hi Float tires only) Refer to "Hydraulic Cylinder (810-497C 4.75x16x1.5 Rod)" for breakdown	
20.	810-745C	CYL REP 4.5X16.38X1.5 ROD (TIE	(S/N B1057A-) (Used with Hi Float tires only) Refer to "Hydraulic Cylinder (810-745C 4.5x16.38x1.5 Rod)" for breakdown	
21.	890-011C	BUSHING SPINDLE 1 1/2X1 1/4X1		
22.	196-293H	EYEBOLT WELDMENT		
23.	803-073C	NUT HEX 1 1/2-6 PLT		
24.	804-197C	WASHER LOCK 1 1/2 PLT		
25.	803-063C	NUT HEX JAM 1 1/2-6 PLT		
26.	802-034C	HHCS 1/2-13X1 1/4 GR5		
27.	804-015C	WASHER LOCK SPRING 1/2 PLT		
28.	161-231D	NTA CASTER RETAINER CAP		
29.	890-193C	STEEL BUSHING 3 1/4X3IDX3LONG		
30.	402-367H	16R CASTER LOWER SWIVEL 3	Used with Standard tires (S/N B1058A+)	
30.	402-264H	CASTER LOWER SWIVEL LOCKING	Used with Hi Float or Standard tires (S/N B1057A-)	
31.	805-001C	PIN 3/8 X 3 USABLE LW/PIN	Formerly 805-152C	
32.	401-798H	TRANSPORT LOCK 1 1/2X19 3/8	Used with standard tires only	
32.	196-289H	CYLINDER LOCK CHANNEL 1 1/2X16	Used with Hi Float tires only	
33.	401-686D	CASTER PIVOT PIN SHIM WASHER		
34.	402-302D	BULK SEED CASTER VERT SHAFT		
35.	802-069C	HHCS 3/4-10X5 GR5		
36.	803-026C	NUT LOCK 3/4-10 PLT		

Gauge Wheels (continued)

(Applies to YP40 only)

Ref	Part No.	Part Description	Comments	Revision
37.	804-102C	PIVOT THRUST WASHER		
38.	401-432H	CASTER YP24 GAGEWHEEL LOWER		
39.	802-069C	HHCS 3/4-10X5 GR5		
40.	803-027C	NUT HEX 3/4-10 PLT		
41.	815-099C	SPINDLE SGL 2.73X15.97		
42.	816-019C	8-BOLT HUB SEAL		
43.	822-036C	BRG CONE 2.00IDX1.18WD #3780	(S/N B1076A-)	
44.	822-037C	BRG CUP 3.67ODX.93WD #3720	(S/N B1076A-)	
45.	802-182C	HUB STUD 5/8-18X2 1/2 GR5	(S/N B1076A-)	
46.	200-006D	8-BOLT WHEEL HUB MACH.	(S/N B1076A-)	
47.	822-039C	BRG CUP 3.00ODX.75WD #2720		
48.	822-038C	BRG CONE 1.31IDX1.01WD #2790		
49.	181-064D	7/8 SPINDLE WASHER, HARDENED		
50.	803-029C	NUT HEX SLOTTED 7/8-14 PLT		
51.	805-016C	PIN COTTER 3/16 X 1 1/4 PLT	(S/N B1076A-)	
52.	890-032C	HUB CAP	(S/N B1076A-)	
53.	815-103C	HUB & SPINDLE ASY 8 BOLT 5790#	(S/N B1076A-) Includes items: 41-52	
54.	803-219C	NUT LUG 5/8-18 X 90 DEG PLT		
55.	196-272K	RH TIRE/RIM 395/55B16.5 SKID 8	(S/N B1075A-) Includes items: 56-58	
55.	196-539K	RH TIRE/RIM395/55B16.5SKID8 BK	(S/N B1076A+) Includes items: 56-58	
55.	814-327C	TIRE/WHEEL ASY 15-19.5	(S/N B1075A-) Used with Hi Float tire kit; Includes items: 56-58	
55.	814-527C	TIRE/WHEEL ASY15-19.5 BKSN	(S/N B1076A+) Used with Hi Float tire kit; Includes items: 56-58	
56.	814-206C	TIRE SKID ST 395/55B16.5 NHS		
56.	814-325C	TIRE 15-19.5 NHS 12 PLY	Used with Hi Float tire kit	
57.	814-208C	RIM 16.5X12, 8 BLT 6 PILT 8 BC	(S/N B1075A-)	
57.	814-549C	RIM16.5X12 8BLT 6PILT 8BC BKSN	(S/N B1076A+)	
57.	814-324C	WHEEL 19.5 X 12.25 8-BOLT	(S/N B1076A+) Used with Hi Float tire kit	
57.	814-507C	WHEEL 19.5 X 12.25 8-BOLT BKSN	(S/N B1076A+) Used with Hi Float tire kit	
58.	814-210C	VALVE STEM METAL TR-575 TUBLES		
58.	816-035C	VALVE STEM TR415X.625X1 1/4 LG	Used with Hi Float tire kit	
59.	802-798C	HHCS 1-8X1 3/4 GR5 NYL		
60.	806-203C	U-BOLT 3/4-10 X 5 1/32 X 4 1/2		
61.	804-023C	WASHER LOCK SPRING 3/4 PLT		
62.	196-409H	CYL PIN NR 1.25X3.09X2.63 W/GR		
63.	805-196C	PIN CLEVIS 1 1/4 X 3 3/8 GR5		
64.	411-338D	WASHER HARD 4.0X2.56X10GA		
65.	805-420C	PIN 1 1/4X8.25 USBL HARD PLT		
66.	194-274D	3S TORSION SPRING HANDLE RH		
67.	402-511D	LOCK PLATE CASTER SWIVEL		
68.	402-513D	SWIVEL LOCK STOP PLATE		
69.	802-053C	HHCS 5/8-11X1 3/4 GR5		
70.	803-021C	NUT HEX 5/8-11 PLT		
71.	804-039C	WASHER FLAT 1 1/4 SAE PLT		
72.	804-022C	WASHER LOCK SPRING 5/8 PLT		
73.	815-627C	HUB & SPINDLE ASY 8 BOLT 5790#	(S/N B1077A+) Includes items: 41-43, 48-50, 54 & 74-78	
74.	815-628C	HUB 8 BOLT 5790# W/CUPS&STUDS	(S/N B1077A+)	
75.	805-104C	PIN COTTER 3/16 X 1 1/2 PLT	(S/N B1077A+)	
76.	815-631C	GASKET, HUB CAP 3 X 3.688	(S/N B1077A+)	
77.	815-630C	HUB CAP 3 X 3.688	(S/N B1077A+)	
78.	802-630C	HHCS 5/16-18X1/2 GR5	(S/N B1077A+)	

Gauge Wheels (continued)

(Applies to YP40 only)

This Page Intentionally Left Blank

Transport Wheels

(Applies to YP40 only)

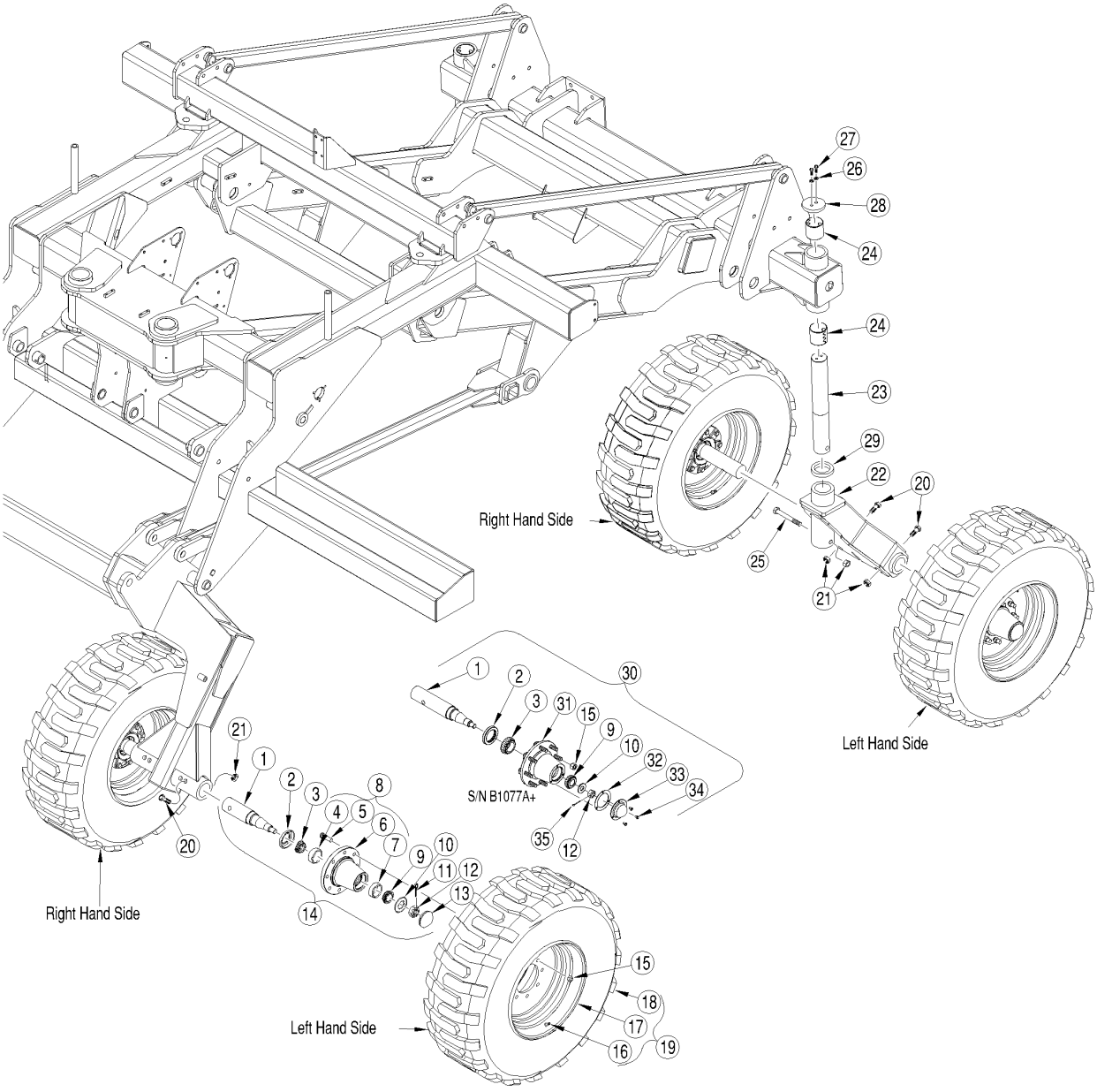

29265

Transport Wheels

(Applies to YP40 only)

Ref.	Part No.	Part Description	Comments	Revision
	dwg29265	Image No.		
1.	815-099C	SPINDLE SGL 2.73X15.97		
2.	816-019C	8-BOLT HUB SEAL		
3.	822-037C	BEARING CUP #3720		
4.	822-036C	BEARING CONE #3780		
5.	802-182C	HUB STUD 5/8-18X2 3/8 GR5		
6.	200-006D	8-BOLT WHEEL HUB MACH.	(S/N B1076A-)	
7.	822-038C	BEARING CONE #2790		
8.	815-101C	HUB 8 BOLT 5790# W/CUPS&STUDS	(S/N B1076A-) Includes 4-7	
9.	822-039C	BEARING CUP #2720		
10.	181-064D	7/8 SPINDLE WASHER, HARDENED		
11.	805-016C	PIN COTTER 3/16 X 1 1/4 PLT	(S/N B1076A-)	
12.	803-029C	NUT HEX SLOTTED 7/8-14 PLT		
13.	P502001	GREASE CAP	(S/N B1076A-)	
14.	815-103C	HUB & SPINDLE ASY 8 BOLT 5790#	(S/N B1076A-) Includes 1-13, 15	
15.	803-219C	NUT LUG 5/8-18 X 90 DEG PLT		
16.	816-035C	VALVE STEM TR415X.625X1 1/4 LG		
17.	814-208C	RIM 16.5X12, 8 BLT 6 PILT 8 BC	(S/N B1075A-)	
17.	814-549C	RIM16.5X12 8BLT 6PILT 8BC BKSN	(S/N B1076A+)	
17.	814-324C	WHEEL 19.5 X 12.25 8-BOLT	(S/N B1075A-) Used with Hi Float tire kit	
17.	814-507C	WHEEL 19.5 X 12.25 8-BOLT BKSN	(S/N B1076A+) Used with Hi Float tire kit	
18.	814-206C	TIRE SKID ST 395/55B16.5 NHS		
18.	814-325C	TIRE 15-19.5 NHS 12 PLY	Used with Hi Float tire kit	
19.	196-272K	RH TIRE/RIM 395/55B16.5 SKID 8	(S/N B1075A-) RH, Includes 16-18	
19.	196-539K	RH TIRE/RIM395/55B16.5SKID8 BK	(S/N B1076A+) RH, Includes 16-18	
19.	814-326C	TIRE/WHEEL ASY 15-19.5 RH	(S/N B1075A-) RH, Includes 16-18, Used with Hi Float tire kit	
19.	814-526C	TIRE/WHEEL ASSY 15-19.5 BKSN	(S/N B1076A+) RH, Includes 16-18, Used with Hi Float tire kit	
19.	196-273K	LH TIRE/RIM 395/55B16.5 SKID 8	(S/N B1075A-) LH, Includes 16-18	
19.	196-540K	LH TIRE/RIM395/55B16.5SKID8 BK	(S/N B1076A+) LH, Includes 16-18	
19.	814-327C	TIRE/WHEEL ASY 15-19.5 LH	(S/N B1075A-) LH, Includes 16-18, Used with Hi Float tire kit	
19.	814-527C	TIRE/WHEEL ASY15-19.5 BKSN	(S/N B1076A+) LH, Includes 16-18, Used with Hi Float tire kit	
20.	802-069C	HHCS 3/4-10X5 GR5		
21.	803-026C	NUT LOCK 3/4-10 PLT		
22.	402-241H	DUAL CASTER SUPT BOLT IN SHAFT	Shown	
23.	402-444D	SHAFT YP24 REAR CASTER STRPF		
24.	890-193C	STEEL BUSHING 3 1/4X3IDX3LONG		
25.	802-070C	HHCS 3/4-10X6 GR5		
26.	804-015C	WASHER LOCK SPRING 1/2 PLT		
27.	802-629C	HHCS 1/2-13X1 1/2 GR8		
28.	161-231D	NTA CASTER RETAINER CAP		
29.	804-102C	PIVOT THRUST WASHER		
30.	815-627C	HUB & SPINDLE ASY 8 BOLT 5790#	(S/N B1077A+)Includes items: 1-3, 9, 10, 12, 15 & 31-35	
31.	815-628C	HUB 8 BOLT 5790# W/CUPS&STUDS	(S/N B1077A+)	
32.	815-631C	GASKET, HUB CAP 3 X 3.688	(S/N B1077A+)	
33.	815-630C	HUB CAP 3 X 3.688	(S/N B1077A+)	
34.	802-630C	HHCS 5/16-18X1/2 GR5	(S/N B1077A+)	
35.	805-104C	PIN COTTER 3/16 X 1 1/2 PLT	(S/N B1077A+)	

Mainframe Hydraulic Drive

(Applies to YP40 only)

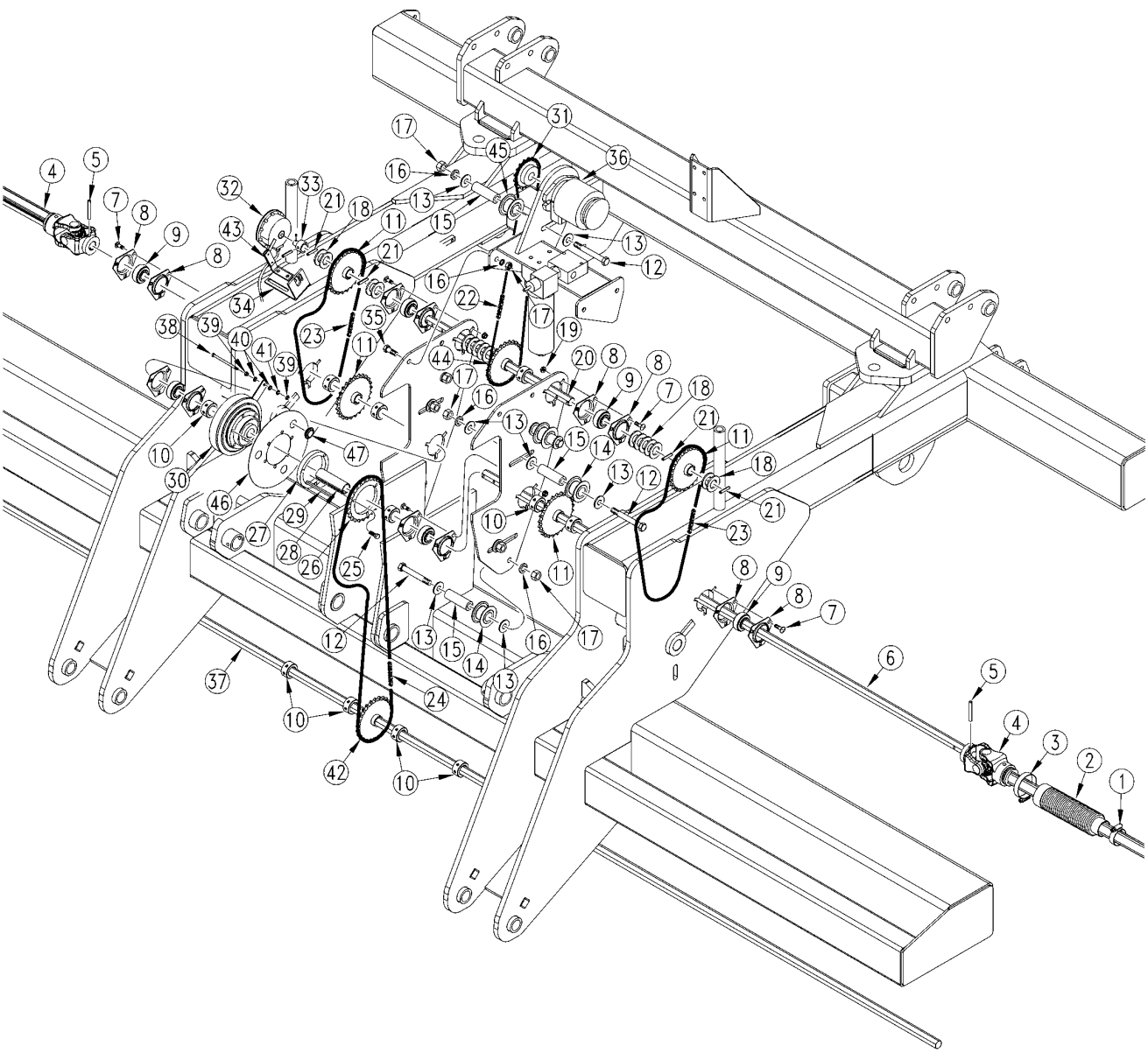

29259

Mainframe Hydraulic Drive

(Applies to YP40 only)

Ref.	Part No.	Part Description	Comments	Revision
	dwg29259	Image No.		
1.	800-257C	CLAMP WRM DRV #20SS (.81-1.75)		
2.	816-587C	DRIVE SHAFT BELLOWS - LONG		
3.	800-125C	CLAMP WRM DRV#28 SS(1.31-2.25)		
4.	826-502C	DRIVESHAFT 3PYP PLANTER		
5.	805-146C	PIN ROLL 1/4 X 2 LG PL		
6.	402-377D	SHAFT 7/8 HEX X 73.37		
7.	802-282C	RHSNB 5/16-18X1 GR5		
8.	822-175C	FLANGETTE 52 3-BOLT PLT		
9.	822-195C	BRG.7/8HEX 52MM SPHR OD PEER		
10.	402-025S	LOCK COLLAR, 7/8 HEX W/ SET SC		
11.	808-309C	SPKT 50C25 X 7/8 HEX BORE		
12.	802-041C	HHCS 1/2-13X3 1/2 GR5		
13.	804-113C	WASHER FLAT 1/2 USS HARD PLT		
14.	817-456C	IDLER SPOOL #50 2.38X1.01X1.31		
15.	120-306D	TUBE RND 1 OD X 7/32W X 2.13		
16.	804-015C	WASHER LOCK SPRING 1/2 PLT		
17.	803-020C	NUT HEX 1/2-13 PLT		
18.	804-061C	WASHER MACH 1.50 X 1.00 X 18GA		
19.	803-177C	NUT HEX FLG TP LK 5/16-18ZNYCR		
20.	402-378D	SHAFT 7/8 HEX X 20.38		
21.	805-180C	PIN ROLL 1/4 X 1 1/2 LG PLT		
22.	136-247D	CHAIN RL #60 41 PITCHES		
23.	136-244D	CHAIN RL #50 68 PITCHES		
24.	136-236D	CHAIN RL #50 82 PITCHES		
25.	802-775C	HSHCS M8X1.25X30 GR8.8 PLT		
26.	808-357C	SPKT 50A25 CLUTCH METRIC BORE		
27.	196-876D	CLUTCH SPROCKET SPACER		
28.	196-877D	BUSHING 1 1/8 ODX7/8 HEX BORE		
29.	839-956C	KEY 1/4 X 3/16 X 3.80		
30.	823-231C	OGURA CLUTCH		
31.	808-388C	SPKT 60B16 X 1 BORE W/KWAY, SS		
32.	464360176S1	APPLICATION RATE SENSOR		
33.	110040305	AR SENSOR MOUNTING HARDWARE		
34.	411-001D	BRACKET DIRECTION SENSOR		
35.	802-203C	HFSS 1/2-13X1 1/2 GR5		
36.	810-603C	MOTOR 8.8 CU IN FC6 MNT KEYED		
37.	402-460D	SHAFT HEX 7/8 X 165 1/2		
37.	401-632D	SHAFT 7/8 HEX X 172	Used with 35cm rows	
38.	802-893C	HHCS 1/4-20X6 GR5 PLT		
39.	803-006C	NUT HEX 1/4-20 PLT		
40.	804-007C	WASHER FLAT 1/4 SAE PLT		
41.	804-006C	WASHER LOCK SPRING 1/4 PLT		
42.	808-319C	SPKT 50C30 X 7/8 HEX BORE		
43.	110040179	AR SENSOR MOUNTING HARDWARE		
44.	808-387C	SPKT 60C22 X 7/8 HEX BORE		
45.	817-770C	IDLER SPOOL #60 2.38X1.01X1.68		
46.	402-507D	CLUTCH OIL SHIELD		
47.	817-813C	BUTTON PLUG 7/8 ROUND HOLE		

Hydraulic Drive 10" Spacing

(Applies to YP40 only)

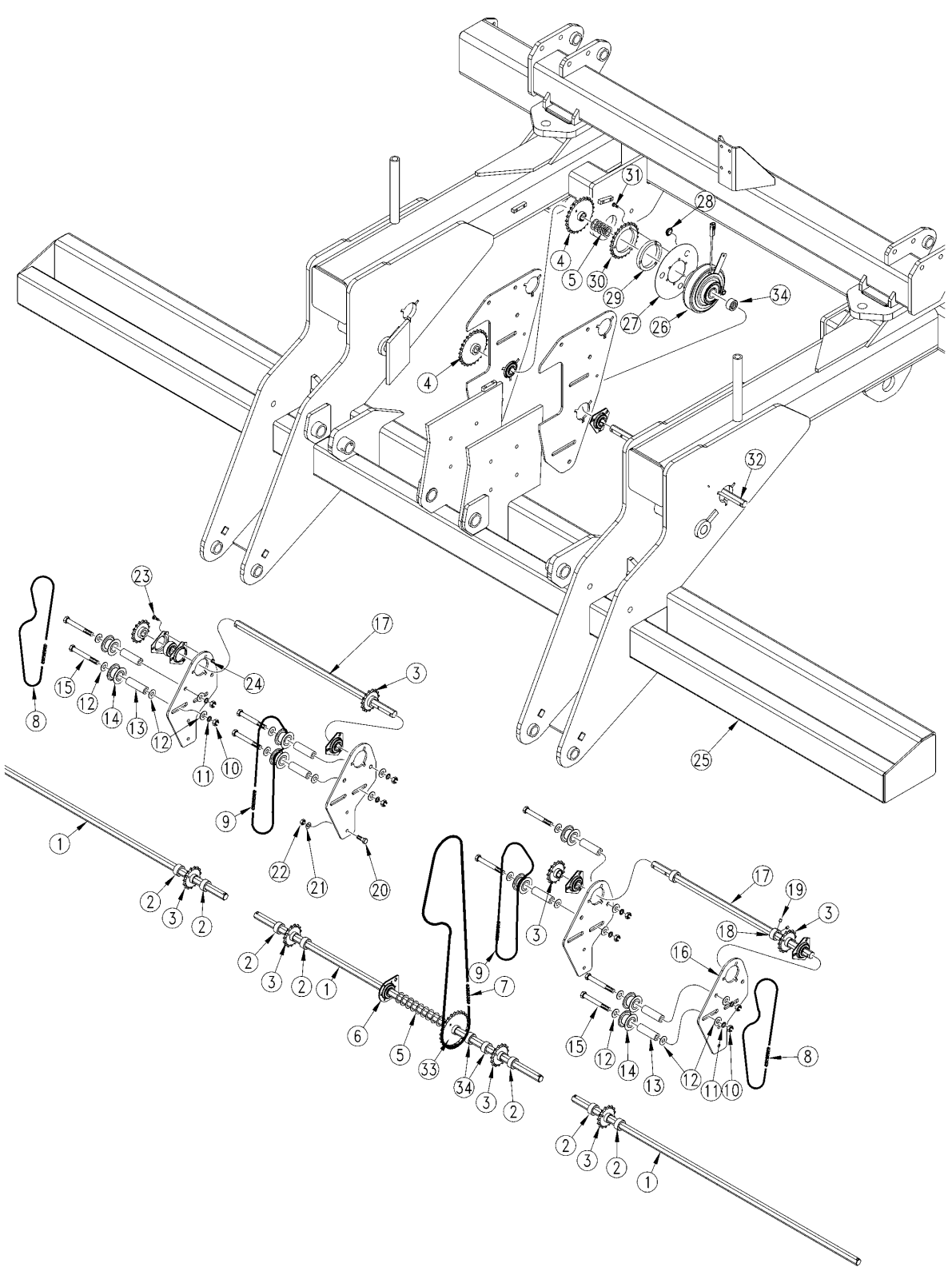

29260

Hydraulic Drive 10" Spacing

(Applies to YP40 only)

Ref.	Part No.	Part Description	Comments	Revision
	dwg29260	Image No.		
1.	402-055D	SHAFT COUNTER 8-30		
2.	402-025S	LOCK COLLAR, 7/8 HEX W/ SET SC		
3.	808-302C	SPKT 50C15 X 7/8 HEX BORE		
4.	808-309C	SPKT 50C25 X 7/8 HEX BORE		
5.	804-061C	WASHER MACH 1.50 X 1.00 X 18GA		
6.	822-239C	PEER 7/8 HEX BRG AND MNT		
7.	803-319C	NUT HEX TOP LOCK 9/16-12 ZNYCR		
8.	136-241D	CHAIN RL #50 64 PITCHES		
9.	136-203D	CHAIN RL #50 62 PITCHES		
10.	803-020C	NUT HEX 1/2-13 PLT		
11.	804-015C	WASHER LOCK SPRING 1/2 PLT		
12.	804-113C	WASHER FLAT 1/2 USS HARD PLT		
13.	120-313D	TUBE RND 1 OD X 7/32W X 3.31		
14.	817-456C	IDLER SPOOL #50 2.38X1.01X1.31		
15.	802-041C	HHCS 1/2-13X3 1/2 GR5		
16.	402-509D	NARROW ROW MID SHAFT BRACKET		
17.	195-189D	POWER SHAFT 7/8 HEX LH		
18.	402-058D	COLLAR LOCK 7/8 HEX		
19.	801-035C	SCREW SET 5/16-18 SKT KP X 3/8		
20.	802-017C	HHCS 3/8-16X1 GR5		
21.	804-011C	WASHER FLAT 3/8 USS PLT		
22.	803-014C	NUT HEX 3/8-16 PLT		
23.	802-082C	HHCS 1/2-13X1 3/4 GR5		
24.	803-177C	NUT HEX FLG TP LK 5/16-18ZNYCR		
25.	401-560H	CENTER FRAME WELDMNT		
26.	823-231C	OGURA CLUTCH		
27.	402-507D	CLUTCH OIL SHIELD		
28.	817-813C	BUTTON PLUG 7/8 ROUND HOLE		
29.	196-876D	CLUTCH SPROCKET SPACER		
30.	808-357C	SPKT 50A25 CLUTCH METRIC BORE		
31.	802-775C	HSHCS M8X1.25X30 GR8.8 PLT		
32.	401-699D	SHAFT 7/8 HEX 25.12 LONG		
33.	808-319C	SPKT 50C30 X 7/8 HEX BORE		
34.	402-429S	7/8 HEX LOCK COLLAR, 1/2 WIDE		

Wing Drive

(Applies to YP40 only)

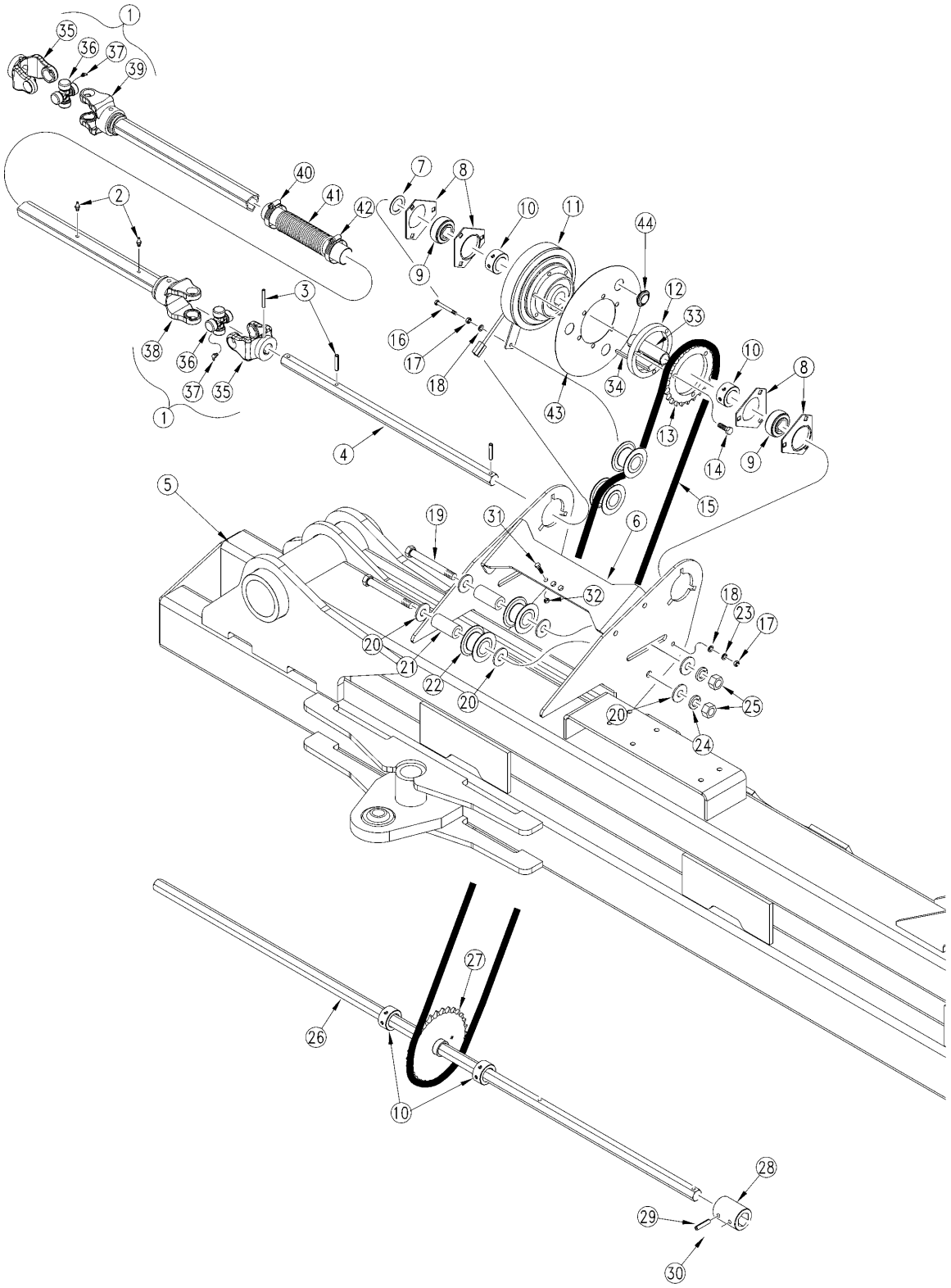

29261

Wing Drive

(Applies to YP40 only)

Ref.	Part No.	Part Description	Comments	Revision
	dwg29261	Image No.		
1.	826-502C	DRIVESHAFT 3PYP PLANTER		
2.	6560007	M6X1X3.5MM THD ZERK 826-501-2		
3.	805-146C	PIN ROLL 1/4 X 2 LG PL		
4.	401-747D	SHAFT 7/8 HEX 19.13 LONG		
5.	401-408H	YP24 LEFT WING FRAME WELDMNT		
5.	401-409H	YP24 RIGHT WING FRAME WELDMNT		
6.	401-563D	DRIVE PLATES BRACE		
7.	804-061C	WASHER MACH 1.50 X 1.00 X 18GA		
8.	822-175C	FLANGETTE 52 3-BOLT PLT		
9.	822-195C	BRG.7/8HEX 52MM SPHR OD PEER		
10.	402-025S	LOCK COLLAR, 7/8 HEX W/ SET SC		
11.	823-231C	OGURA CLUTCH		
12.	196-876D	CLUTCH SPROCKET SPACER		
13.	808-357C	SPKT 50A25 CLUTCH METRIC BORE		
14.	802-775C	HSHCS M8X1.25X30 GR8.8 PLT		
15.	136-236D	CHAIN RL #50 82 PITCHES		
16.	802-893C	HHCS 1/4-20X6 GR5 PLT		
17.	803-006C	NUT HEX 1/4-20 PLT		
18.	804-007C	WASHER FLAT 1/4 SAE PLT		
19.	802-041C	HHCS 1/2-13X3 1/2 GR5		
20.	804-113C	WASHER FLAT 1/2 USS HARD PLT		
21.	120-306D	TUBE RND 1 OD X 7/32W X 2.13		
22.	817-456C	IDLER SPOOL #50 2.38X1.01X1.31		
23.	804-006C	WASHER LOCK SPRING 1/4 PLT		
24.	804-015C	WASHER LOCK SPRING 1/2 PLT		
25.	803-020C	NUT HEX 1/2-13 PLT		
26.	173-173D	SHAFT 7/8 HEX X 149.625 LONG	LH Wing	
26.	402-056D	SHAFT DRILL 6-30	RH Wing	
27.	808-319C	SPKT 50C30 X 7/8 HEX BORE		
28.	402-052D	COUPLER SHEAR		
29.	805-180C	PIN ROLL 1/4 X 1 1/2 LG PLT		
30.	805-021C	PIN COTTER 1/4 X 2 PLT		
31.	802-782C	HHCS M8X1.25X14 GR8.8		
32.	803-278C	NUT HEX NYLOCK M8X1.25 PLT		
33.	196-877D	BUSHING 1 1/8 ODX7/8 HEX BORE		
34.	839-956C	KEY 1/4 X 3/16 X 3.80		
35.	1071001	EC YOKE ASSY		
36.	1001020	EC CROSS ASSEMBLY (U JOINT)		
37.	084099	WS ZERK M8 X 1 X 45 DEG		
38.	1701027	EC OUTER TUBE YOKE		
39.	1701029	EC INNER TUBE YOKE		
40.	800-125C	CLAMP WRM DRV#28 SS(1.31-2.25)		
41.	816-587C	DRIVE SHAFT BELLOWS - LONG		
42.	800-257C	CLAMP WRM DRV #20SS (.81-1.75)		
43.	402-507D	CLUTCH OIL SHIELD		
44.	817-813C	BUTTON PLUG 7/8 ROUND HOLE		

Tru-Count Clutch Assembly

(Applies to YP40 only)

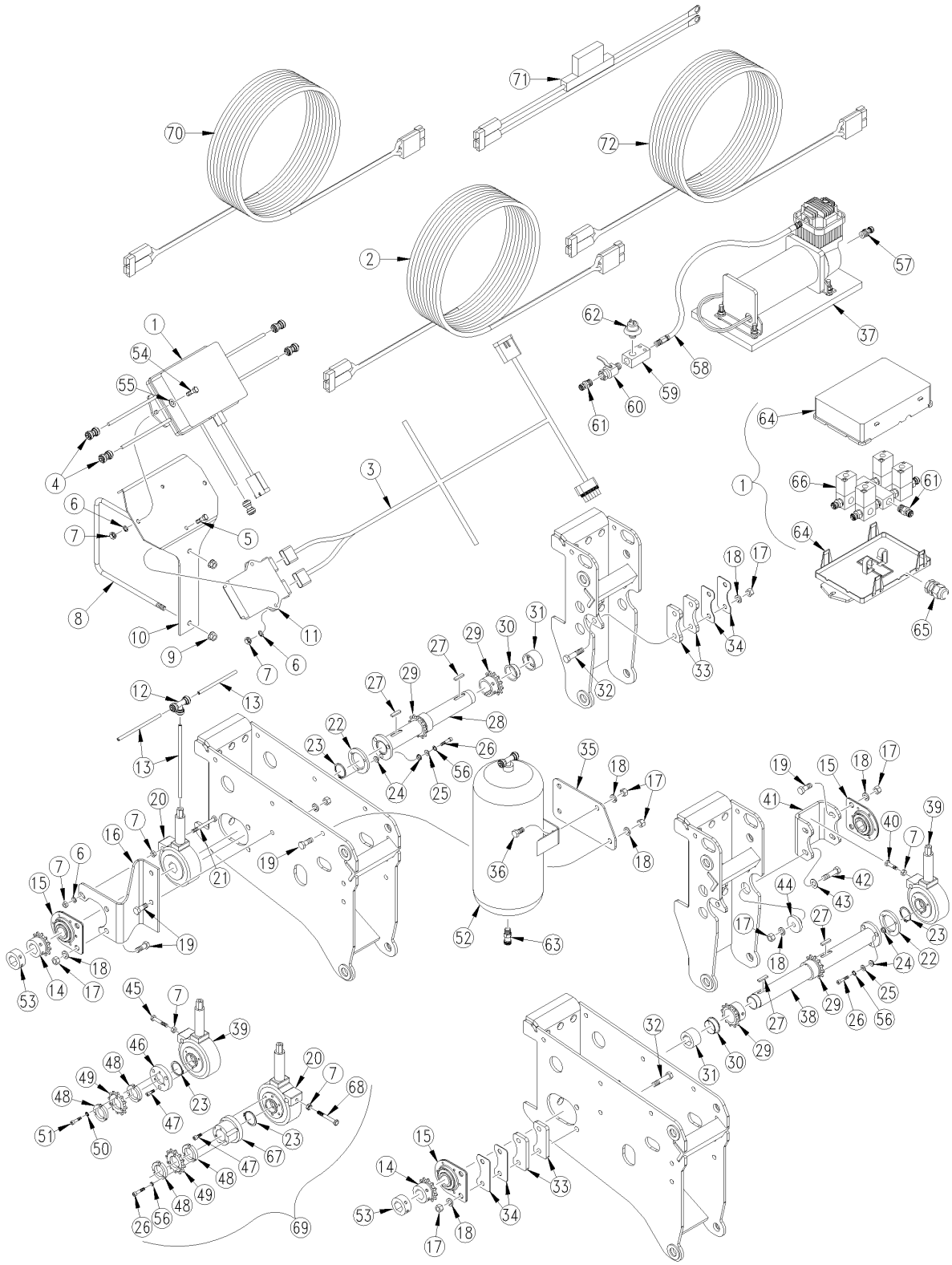

29815

Tru-Count Clutch Assembly

(Applies to YP40 only)

Ref.	Part No.	Part Description	Comments	Revision
	dwg29815	Image No.		
1.	829-140C	TRU-COUNT 75713-00 VALVE ASM		
2.	823-337C	EXTENSION HARNESS 40' 6 PIN WP		
2.	823-336C	EXTENSION HARNESS 25' 6 PIN WP		
3.	467983505	DJIA OUTPUT HARN 8-CH TRU-COUN		
4.	830-383C	CP 1/4 PUSH LOK POLY		
5.	802-224C	HHCS 1/4-20X1 1/4 GR5		
6.	804-006C	WASHER LOCK SPRING 1/4 PLT		
7.	803-006C	NUT HEX 1/4-20 PLT		
8.	806-073C	U-BOLT 3/8-16 X 7 1/32 X 7 7/8		
9.	803-209C	NUT FLANGE LOCK 3/8-16 PLT		
10.	402-533D	TRU-COUNT VALVE MODULE BRACKET		
11.	467982000S1	PLNTR CNTRL OUTPUT MODULE(POM)		
12.	830-405C	TE POLY 1/4 PUSH LOCK		
13.	990-109R	TUBE NYLON 1/4OD X 062WL		
14.	808-395C	SPKT 41C12 W/SS SPCL PLT		
15.	822-239C	PEER 7/8 HEX BRG AND MNT		
16.	402-523D	OFFSET BRG BRACKET	RH Bracket (Shown)	
16.	402-532D	OFFSET BRG BRACKET LH	LH Bracket	
17.	803-014C	NUT HEX 3/8-16 PLT		
18.	804-013C	WASHER LOCK SPRING 3/8 PLT		
19.	802-017C	HHCS 3/8-16X1 GR5		
20.	823-327C	TRUE COUNT RH AIR CLUTCH	RH clutch	
21.	802-097C	HHCS 1/4-20X2 1/2 GR5		
22.	402-525D	TRU-COUNT HUB		
23.	800-004C	SNAP RING EXT BASIC 1 3/16		
24.	816-648C	RUBBER FLG BUSH .189ID.36OD		
25.	804-046C	WASHER FLAT #10 SAE PLT		
26.	802-901C	HSHCS #10-32X1		
27.	402-534D	KEY .250X.125X1.00 RECT		
28.	402-272H	TRU-COUNT 15 IN SPKT TUBE	NO 3PYP	
28.	402-274H	TRU-COUNT 15 IN LH SPKT TUBE	YP40 & YP24	
28.	402-278H	TRU-COUNT TR SPKT TUBE REP	ALL	
29.	808-415C	SPKT 41B12 SPCL		
30.	817-852C	FLG BSHG 30MMX32MMX12MM		
31.	402-524D	ADAPTER 7/8 HEX 1 1/4 RND BORE		
32.	802-023C	HHCS 3/8-16X1 3/4 GR5		
33.	402-527D	SPACER PLATE FRT BEARING		
34.	402-541D	SPACER SHIM FRT BRG TRU COUNT		
35.	402-535D	TRU-COUNT AIR TANK MOUNT PLATE		
36.	802-014C	HHCS 3/8-16X3/4 GR5		
37.	823-330C	TRU-COUNT COMPRESSOR ASSEMBLY		
38.	402-280H	TRU-COUNT TR REVERSE SPKT TUBE		
39.	823-328C	TRU-COUNT LH AIR CLUTCH		
40.	802-005C	HHCS 1/4-20X1 GR5		
41.	402-538D	SUPT BRACKET HEX BRG		
42.	802-022C	HHCS 3/8-16X1 1/2 GR5		
43.	804-012C	WASHER FLAT 3/8 SAE PLT		
44.	402-539D	STEP BUSHING FOR OPENER BRG		
45.	802-167C	HHCS 1/4-20X1 1/2 GR5		Used on single row assembly
46.	402-529D	ADAPTER TC CLUTCH 41A12 SPKT	Used on single row assembly	
47.	802-575C	HSHCS #10-32X5/8		Used on single row assembly
48.	402-530D	TRU-COUNT SPKT RETAINER RING	Used on single row assembly	
49.	402-630D	SPKT 41A12 3HOLE TC		Used on single row assembly
50.	804-032C	WASHER LOCK INTERNAL #10 SS	Used on single row assembly	
51.	802-904C	HSHCS #10-32X7/8		Used on single row assembly
52.	823-329C	TRU-COUNT AIR TANK ASM		
53.	402-025S	LOCK COLLAR, 7/8 HEX W/ SET SC		

Tru-Count Clutch Assembly (continued)

(Applies to YP40 only)

Ref	Part No.	Part Description	Comments	Revision
54.	802-004C	HHCS 1/4-20X3/4 GR5		
55.	804-007C	WASHER FLAT 1/4 SAE PLT		
56.	804-054C	WASHER LOCK #10		
57.	823-368C	68935 TRU CNT FIT.1/4MNPTX1/4		
58.	823-367C	68932 TRU CNT HOSE FOR COMPRES		
59.	823-370C	69045 TRU CNT MAN CMP 350/450C		
60.	823-365C	69151 TRU COUNT MINI BALL VALV		
61.	823-375C	69002-10S (10PK)TRU CNT TB FIT		
62.	823-374C	77621 TRU CNT SWTCH 85-105PSI		
63.	823-372C	68892 TRU CNT BRSS TNK DRN 1/4		
64.	823-366C	72376-00 TRU CNT VALV ENCLOSUR		
65.	823-373C	73814 TRU CNT STRN RELIEF LIQ		
66.	823-371C	68842 TRU COUNT AIR VALVE SING		
67.	402-591D	SPACER EXTENDED SNGL CLUTCH TC		
68.	802-152C	HHCS 1/4-20X2 GR5		
69.	402-329K	TRU-COUNT SHORT ROW SINGLE ASM	Only used on YP30. Includes items: 7, 20, 23, 26, 47-49, 56, & 67-68	
70.	823-389C	75166 TRIMBLE 11' EXT. HARN		
71.	823-388C	75165 TRIMBLE BATT LEAD CAB		
72.	823-390C	75167 TRIMBLE 8' EXT. HARN		

Tru-Count Clutch Assembly (continued)

(Applies to YP40 only)

This Page Intentionally Left Blank

(Applies to YP40 only)

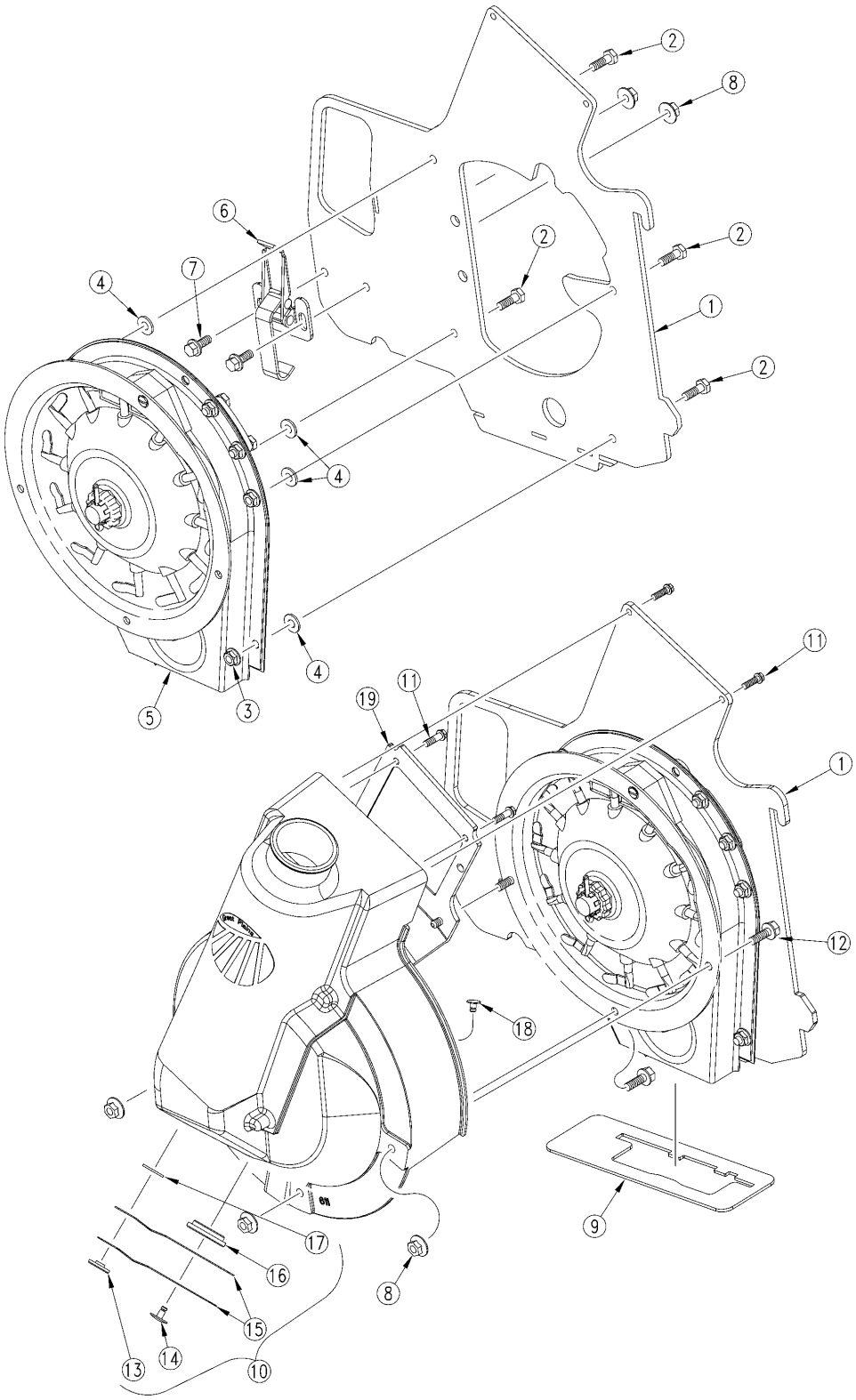

22709

25 Series Corn Meter (6FP 403-169K) (12FP 403-158K) (12 FP Sunflower 403-203K)

(Applies to YP40 only)

Ref	Part No.	Part Description	Comments	Revision
	dwg22709	Image No.		
1.	403-233D	25BF FINGER PICKUP BACKING PLT		
2.	802-004C	HHCS 1/4-20X3/4 GR5		
3.	803-194C	NUT HEX WHIZ 1/4-20 PLT		
4.	804-007C	WASHER FLAT 1/4 SAE PLT		
5.	890-857C	PRECISION PL 6FP CORN METER	Refer to page (6FP Corn Meter (890-857C) for breakdown	
5.	890-856C	PRECISION PL 12FP CORN METER	Refer to page (12FP Corn Meter (890-856C) 12FP Sunflower Meter (890-912C) for breakdown	
5.	890-912C	PREC PL 12FP SUNFLOWER METER	Refer to page (12FP Corn Meter (890-856C) 12FP Sunflower Meter (890-912C) for breakdown	
6.	800-137C	OVER CENTER LATCH		
7.	802-257C	HFSS 1/4-20X3/4 GR5		
8.	803-088C	NUT HEX LOCK 1/4-20 FLG		
9.	817-565C	FINGER PICKUP METER DUST FLAP		
10.	403-157S	25S BULK FILL COVER SUB ASY		
11.	801-195C	SCREW HI-LOW #10 X .63 HEX HD		
12.	802-257C	HFSS 1/4-20X3/4 GR5		
13.	403-150D	CLEANOUT SPRING BUSHING		
14.	800-220C	RIVET POP 3/16 .062-.251 LF		
15.	403-149D	METER CLEANOUT COVER SPRING		
16.	817-607C	CORN METER CLEANOUT COVER		
17.	804-206C	WASHER FENDER 3/16 X 3/4		
18.	800-230C	RIVET POP 3/16 .251-.375 LF		
19.	817-612C	OB RPBY 403-157S		

25 Series Singulating Meter (403-156K)

(Applies to YP40 only)

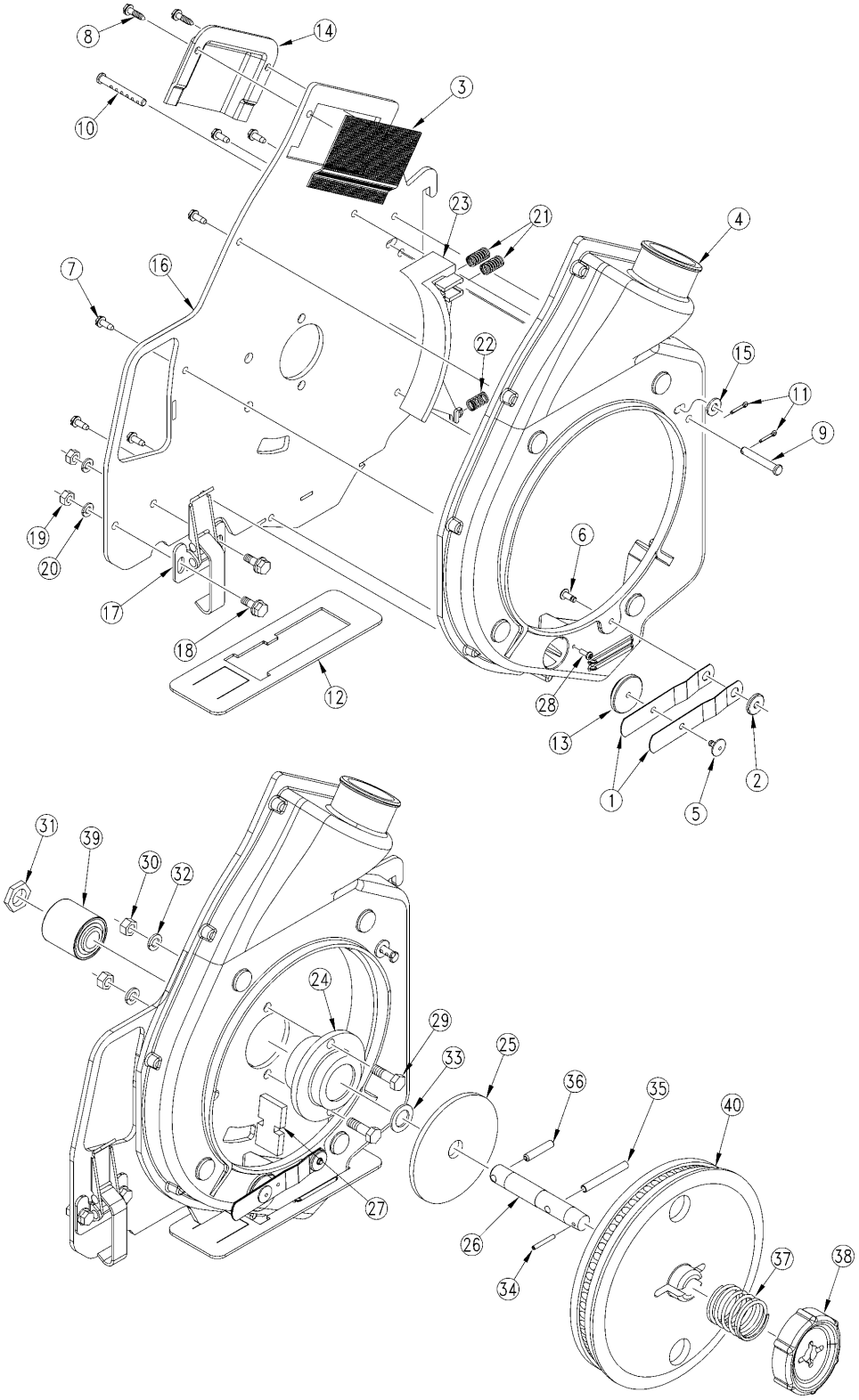

22744

25 Series Singulating Meter (403-156K)

(Applies to YP40 only)

Ref.	Part No.	Part Description	Comments	Revision
	dwg22744	Image No.		
1.	403-149D	METER CLEANOUT COVER SPRING		
2.	403-150D	CLEANOUT SPRING BUSHING		
3.	403-152D	SINGULATOR COVER SCREEN FORMED		
4.	403-232D	25BF SINGULATOR METER COVER		
5.	800-220C	RIVET POP 3/16 .062-.251 LF		
6.	800-227C	RIVET POP 3/16 .251-.375		
7.	801-002C	SCREW HEX SLT10-16X1/2P.THD CT		
8.	801-172C	SCREW HEX SLT 10-16X3/4PTHD CT		
9.	805-296C	PIN CLEVIS 1/4X1 31/64 USBL		
10.	805-298C	PIN CLEVIS 1/4 X 2 ADJUSTABLE		
11.	805-307C	PIN COTTER 3/32 X 1/2		
12.	817-564C	PRECISION METER DUST FLAP		
13.	817-568C	METER CLEANOUT COVER		
14.	817-569C	25BF PRECISION VENT COVER		
15.	804-007C	WASHER FLAT 1/4 SAE PLT		
16.	403-154D	25S BF SINGULATR METER BACK PL		
17.	800-137C	OVER CENTER LATCH		
18.	802-257C	HFSS 1/4-20X3/4 GR5		
19.	803-006C	NUT-HEX 1/4-20 PLT		
20.	804-006C	WASHER LOCK SPRING 1/4 PLT		
21.	807-186C	SPRING COMP .39ODX.75LGX.047W		
22.	807-194C	SPRING COMP .39ODX.69LX.043WSS		
23.	817-405C	METER SEED CUTOFF SLIDE		
24.	403-056D	PSS METER HUB		
25.	403-058D	PSS METER WHEEL SUPPORT PLATE		
26.	403-117D	PSS METER Q/C DRIVE SHAFT		
27.	403-153D	METER WHEEL SCRAPER		
28.	801-106C	CRPH TAPPING SCREW #6 X 3/8		
29.	802-159C	HHCS 5/16-18X1 GR5		
30.	803-008C	NUT HEX 5/16-18 PLT		
31.	803-345C	NUT HEX THIN 5/8-18 X 3/16 PLT		
32.	804-009C	WASHER LOCK SPRING 5/16 PLT		
33.	804-111C	WASHER MACH 1.00 X .625 X 14GA		
34.	805-080C	PIN ROLL 1/8 X 1LG. PLT.		
35.	805-146C	PIN ROLL 1/4 X 2 LG PL		
36.	805-208C	PIN, ROLL 1/4 X 1 1/4 LONG		
37.	807-187C	SPRING COMP 1.46ODX1.5X.112W		
38.	817-425C	KNOB		
39.	822-170C	BRG .63ID PRESS WHL ASY		
40.	403-127D	CORN RND 1400-1900 28CELL-GRN		
40.	403-128D	CORN RND 1700-2200 28CELL-GRN		
40.	403-129D	CORN RND 1400-1700 42CELL-GRN		
40.	403-130D	CORN RND 1700-2000 42CELL-GRN		
40.	403-131D	CORN FLT 1500-1675 28CELL-GRN		
40.	403-132D	CORN FLT 1625-1800 28CELL-GRN		
40.	403-133D	COTTON WHEEL 4000-4600-GRN		
40.	403-134D	COTTON WHEEL 4600-5200-GRN		
40.	403-135D	COTTON WHEEL 5200-6000-GRN		
40.	403-136D	MILO WHEEL 51 CELL-GRN		
40.	403-137D	MILO WHEEL 102 CELL-GRN		
40.	403-138D	MILO WHEEL 135 CELL-GRN		
40.	403-139D	MILO WHEEL 270 CELL-GRN		
40.	403-140D	MILO WHEEL 135 CELL-GRN		
40.	403-141D	MILO WHEEL 270 CELL-GRN		
40.	403-122D	SOYBEAN WHEEL 1700-2200-GRN		
40.	403-123D	SOYBEAN WHEEL 2200-2700-GRN		
40.	403-124D	SOYBEAN WHEEL 2700-3200-GRN		

25 Series Singulating Meter (403-156K) (continued)

(Applies to YP40 only)

Ref	Part No.	Part Description	Comments	Revision
40.	403-125D	SOYBEAN WHEEL 3100-3800-GRN		
40.	403-126D	SOYBEAN WHEEL 3600-4000-GRN		
40.	403-118D	WHEAT WHEEL-GRN		
40.	403-119D	WHEAT WHEEL-HIGH RATE-GRN		
40.	403-120D	VOLUMETRIC #3-GRN		

(Applies to YP40 only)

This Page Intentionally Left Blank

20 Series Singulating Meter

(Applies to YP40 only)

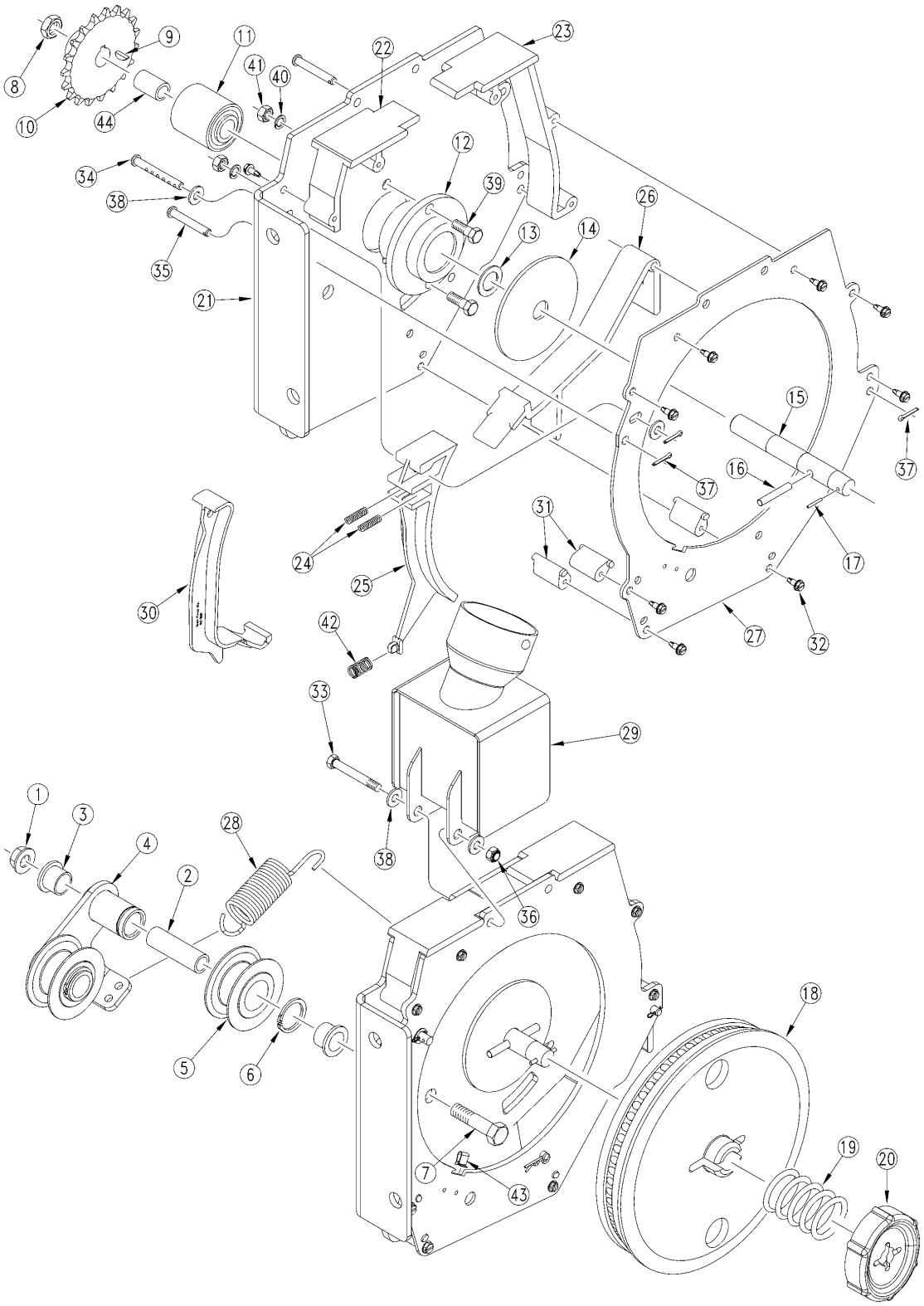

27323

20 Series Singulating Meter

(Applies to YP40 only)

Ref.	Part No.	Part Description	Comments	Revision
	dwg27323	Image No.		
1.	803-229C	NUT HEX FLANGE LOC 7/16-14 PLT		
2.	402-282D	PSS IDLER INNER PIVOT TUBE		
3.	817-083C	PRESS WHEEL ARM PIVOT BUSHING		
4.	402-149H	PSS METER IDLER BRACKET WLDMT		
5.	817-406C	IDLER 1 PC 2.38X1.01X1.062		
6.	800-085C	SNAP RING EXT 1 HEAVY		
7.	802-315C	HHCS 7/16-14X2 3/4 GR5		
8.	803-302C	NUT HEX JAM NYLOCK 5/8-18 PLT		
9.	800-046C	WOODRUFF KEY #606		
10.	808-277C	SPKT 41B19 X 5/8 BORE W/KYWAY		
11.	822-170C	BEARING PRESS WHEEL ASSEMBLY		
12.	403-056D	PSS METER HUB		
13.	804-111C	WASHER MACH 1.00 X .625 X 14GA		
14.	403-058D	PSS METER WHEEL SUPPORT PLATE		
15.	403-057D	PSS METER SHAFT SHORT		
15.	403-063D	BM PSS METER SHAFT		
16.	805-146C	PIN ROLL 1/4 X 2 LG PL		
17.	805-080C	PIN ROLL 1/8 X 1LG. PLT.		
18.	403-061D	PSS SOYBEAN WHEEL 2700-3200		
18.	403-066D	PSS SOYBEAN WHEEL 3100-3800		
18.	403-068D	PSS SOYBEAN WHEEL 3600-4000		
18.	403-070D	PSS SOYBEAN WHEEL 2200-2700		
18.	403-071D	PSS SOYBEAN WHEEL 1700-2200		
18.	403-142D	PSS MED RATE RICE-RIBBON		
18.	403-095D	PSS HIGH RATE RICE-RIBBON		
18.	403-089D	PSS RICE WHEEL-MED RATE 2002		
18.	403-107V	PSS RICE WHEEL W/ RIVETS		
18.	403-092D	PSS MILO WHEEL 51 POCKETS		
18.	403-093D	PSS MILO WHEEL 102 POCKETS		
18.	403-081D	PSS MILO WHEEL 135 POCKETS		
18.	403-082D	PSS MILO WHEEL 270 POCKETS		
18.	403-090D	PSS MILO WHEEL 135 POCKETS		
18.	403-091D	PSS MILO WHEEL 270 POCKETS		
18.	403-085D	PSS WHEAT WHEEL-HIGH RATE		
18.	403-060D	PSS WHEAT WHEEL		
18.	403-094D	PSS VOLUMETRIC #3		
18.	403-076D	PSS COTTON WHEEL 5200-6000		
18.	403-077D	PSS COTTON WHEEL 4600-5200		
18.	403-078D	PSS COTTON WHEEL 4000-4600		
18.	403-083D	PSS CORN RNDS 1400-1900 28CELL		
18.	403-096D	PSS CORN RNDS 1700-2200 28CELL		
18.	403-098D	PSS CORN RNDS 1700-2000 42CELL		
18.	403-097D	PSS CORN RNDS 1400-1700 42CELL		
18.	403-084D	PSS CORN RNDS 1400-1900 56CELL		
18.	403-075D	CORN WHL FLAT&RND -OBSOLETE-		
18.	403-086D	PSS CORN FLAT 1500-1675 28CELL		
18.	403-088D	PSS CORN FLAT 1625-1800 28CELL		
18.	403-425D	PSS LOW RATE RICE-RIBBON		
18.	403-426D	LOW RATE RICE-RIBBON-GRN		
19.	807-187C	SPRING COMP 1.46ODX1.5X.112W		
20.	817-425C	KNOB		
21.	403-053D	PSS METER MOUNT PLATE FORMED		
22.	817-403C	METER FRONT CAP		
23.	817-404C	METER REAR CAP		
24.	807-186C	SPRING COMP .39ODX.75LGX.047W		
25.	817-405C	METER SEED CUTOFF SLIDE		
26.	817-402C	METER CLEANOUT DOOR		

20 Series Singulating Meter (continued)

(Applies to YP40 only)

Ref	Part No.	Part Description	Comments	Revision
27.	403-054D	PSS METER COVER PLATE		
28.	807-185C	SPRING EX 1ODX3.5LX.105 OFFSET		
29.	403-247H	SEED TUBE VENT WLMT		
30.	817-529C	FLOW GATE		
31.	817-407C	METER SPACER .5X.161X1.062		
32.	801-160C	HWHSTS #10-24X1/2 TYPE F SCREW		
33.	802-152C	HHCS 1/4-20X2 GR5		
34.	805-298C	PIN CLEVIS 1/4 X 2 ADJUSTABLE		
35.	805-296C	PIN CLEVIS 1/4 X 1 31/64 USBL		
36.	803-255C	NUT HEX NYLOCK 1/4-20		
37.	805-297C	PIN COTTER 5/64 X 1/2		
38.	804-007C	WASHER FLAT 1/4 SAE PLT		
39.	802-007C	HHCS 5/16-18X3/4 GR5		
40.	804-009C	WASHER LOCK SPRING 5/16 PLT		
41.	803-008C	NUT HEX 5/16-18 PLT		
42.	807-194C	SPRING COMP .39ODX.69LX.043WSS		
43.	800-319C	CLIP, U-TYPE .156 PANEL X .63W		
44.	403-064D	BM METER SHAFT SPACER		

20 Series Singulating Meter (continued)

(Applies to YP40 only)

This Page Intentionally Left Blank

12FP Corn Meter (890-856C) 12FP Sunflower Meter (890-912C)

(Applies to YP40 only)

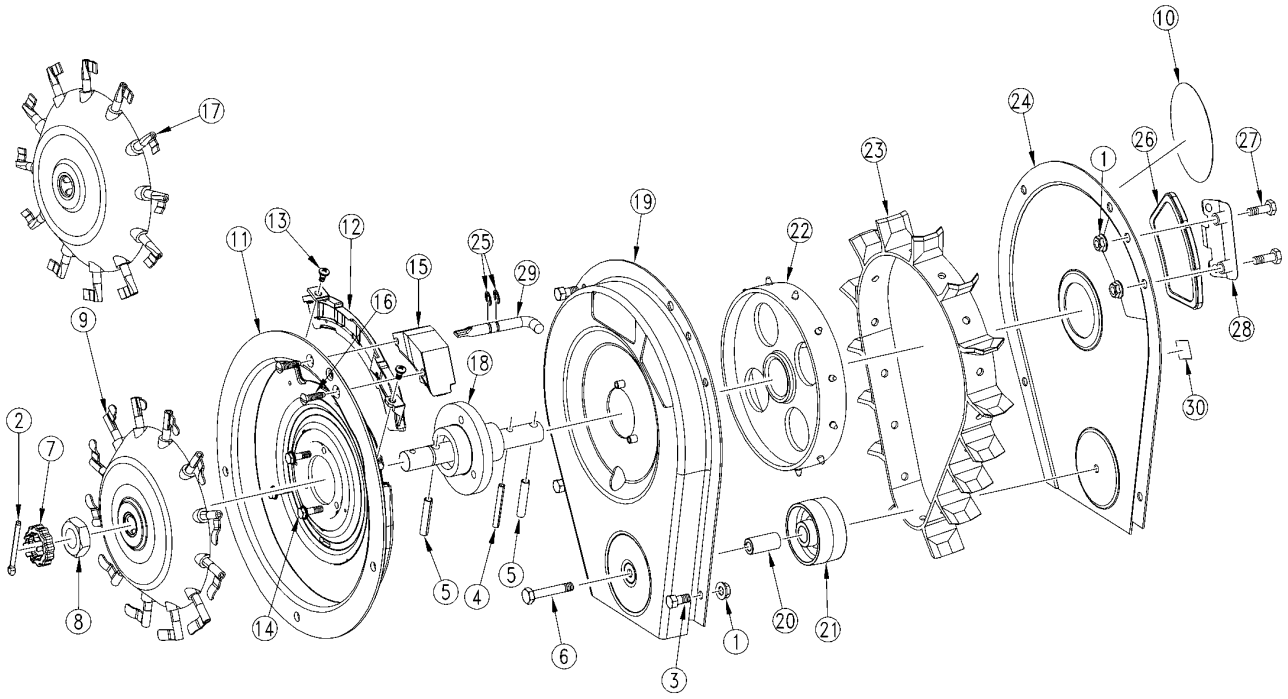

Note:

If meter is disassembled for service or repair it must be properly re-assembled and have the finger assembly torqued into place. Refer to operators manual for instructions.

21992

12FP Corn Meter (890-856C) 12FP Sunflower Meter (890-912C)

(Applies to YP40 only)

Ref.	Part No.	Part Description	Comments	Revision
	dwg21992	Image No.		
1.	803-194C	NUT HEX WHIZ 1/4-20 PLT		
2.	805-089C	PIN COTTER 5/32 X 1 1/2 LONG		
3.	802-283C	HHCS 1/4-20X1/2 GR2		
4.	805-024C	PIN ROLL 3/16X 1 1/2 PLT		
5.	805-208C	PIN, ROLL 1/4 X 1 1/4 LONG		
6.	802-221C	HHCS 1/4-20X1 1/2 GR2		
7.	343021	METER NUT COVER		
8.	31114H1041	5/8 METER NUT		
9.	343029	FINGER ASSEMBLY 12 FINGER	Corn only	
10.	900M08	METER STICKER	Corn only	
11.	342103	POP MAX II BACK PLATE A INSERT	Corn only	
11.	342111	SUNFLOWER POPMAX PLATE ASSBY	Sunflower only	
12.	342110	INSERT A	(Option) See your GP dealer for application. (Standard insert for Corn)	
12.	342107	B INSERT FOR POPMAX II	(Option) See your GP dealer for application.	
12.	342108	C INSERT FOR POPMAX II	(Option) See your GP dealer for application. (Standard insert for sunflower)	
13.	31128864	8-32 X 5/16 PAN HEAD SCREW		
14.	31121H1295	SCREW .19 X 5/8		
15.	343052	ADJ BRUSH KIT	Corn only	
15.	343091	BLANK BRUSH	Sunflower only	
16.	343032	FINGER PICKUP BRUSH SCREW		
17.	343067	FINGER ASSEMBLY 12 FINGER	Sunflower only	
18.	343011	PRECISION BRG W/HOUSING		
19.	343002	BELT HOUSING		
20.	343006	BUSHING		
21.	343001	ROLLER IDLER		
22.	343062	DRIVE WHEEL PREC. PLANTING		
23.	343066	SURE FIRE BELT	Must be oriented as shown	
24.	343005	METER COVER		
25.	343089	PRECISION E CLIP	Corn only	
26.	343073	2007 SKIP STOP PAD		
27.	802-005C	HHCS 1/4-20X1 GR5		
28.	343092	HDWE FOR(4)2007 SKIP STOP PADS		
29.	343060	REPLACED BY PRE160011	Corn only	
30.	848-118C	DECAL 12 FINGER CORN		

6FP Corn Meter (890-857C)

(Applies to YP40 only)

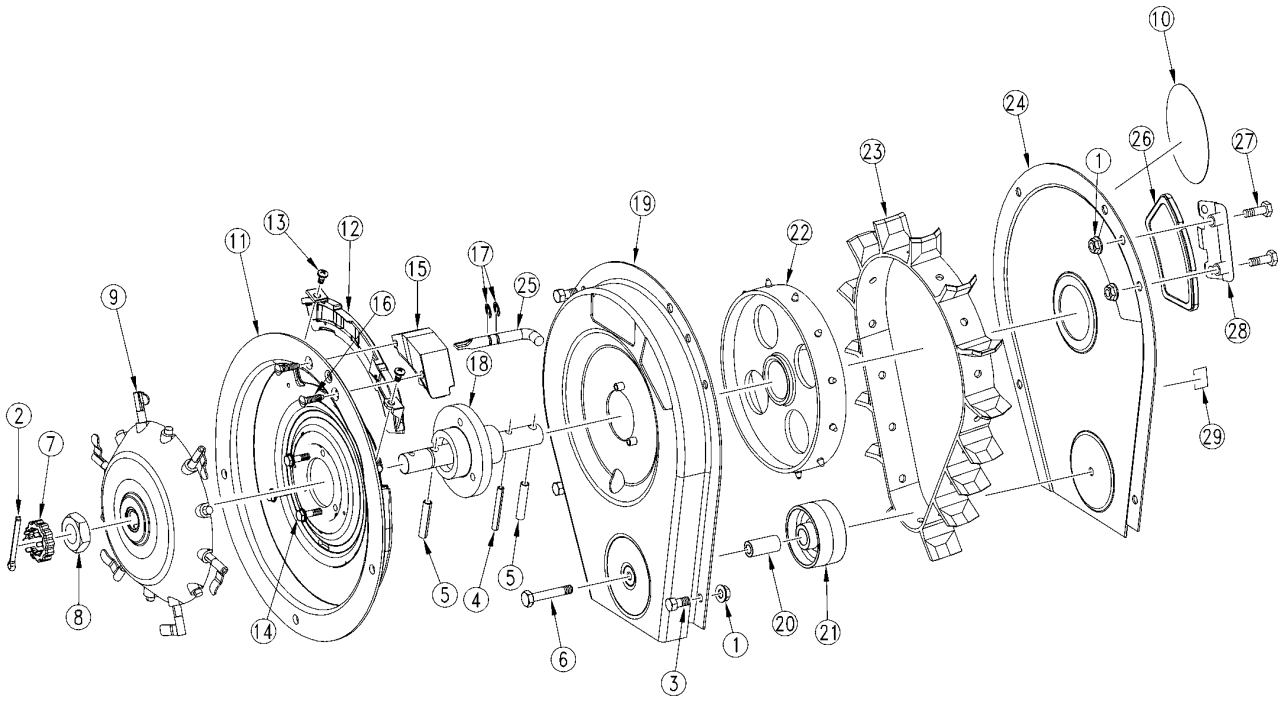

Note:

If meter is disassembled for service or repair it must be properly re-assembled and have the finger assembly torqued into place. Refer to operators manual for instructions.

21991

6FP Corn Meter (890-857C)

(Applies to YP40 only)

Ref.	Part No.	Part Description	Comments	Revision
	dwg21991	Image No.		
1.	803-194C	NUT HEX WHIZ 1/4-20 PLT		
2.	805-089C	PIN COTTER 5/32 X 1 1/2 LONG		
3.	802-283C	HHCS 1/4-20X1/2 GR2		
4.	805-024C	PIN ROLL 3/16X 1 1/2 PLT		
5.	805-208C	PIN, ROLL 1/4 X 1 1/4 LONG		
6.	802-221C	HHCS 1/4-20X1 1/2 GR2		
7.	343021	METER NUT COVER		
8.	31114H1041	5/8 METER NUT		
9.	343053	FINGER ASSEMBLY 6 FINGER CORN		
10.	900MO8	STICKER		
11.	342103	POP MAX II BACK PLATE A INSERT		
12.	342110	INSERT A	(Option) See your GP dealer for application. (Standard insert for Corn)	
12.	342107	B INSERT FOR POPMAX II	(Option) See your GP dealer for application.	
12.	342108	C INSERT FOR POPMAX II	(Option) See your GP dealer for application. (Standard insert for sunflower)	
13.	31128864	8-32 X 5/16 PAN HEAD SCREW		
14.	31121H1295	SCREW .19 X 5/8		
15.	343052	ADJ BRUSH KIT		
16.	343032	FINGER PICKUP BRUSH SCREW		
17.	343089	PRECISION E CLIP		
18.	343011	PRECISION BRG W/HOUSING		
19.	343002	BELT HOUSING		
20.	343006	BUSHING		
21.	343001	ROLLER IDLER		
22.	343062	DRIVE WHEEL PREC. PLANTING		
23.	343066	SUREFIRE SEED BELT	Must be oriented as shown	
24.	343005	METER COVER		
25.	343060	REPLACED BY PRE160011		
26.	343073	2007 SKIP STOP PAD		
27.	802-005C	HHCS 1/4-20X1 GR5		
28.	343092	HDWE FOR(4)2007 SKIP STOP PADS		
29.	848-119C	DECAL 6 FINGER CORN		

20 Series Opener Arms & Mounts

(Applies to YP40 only)

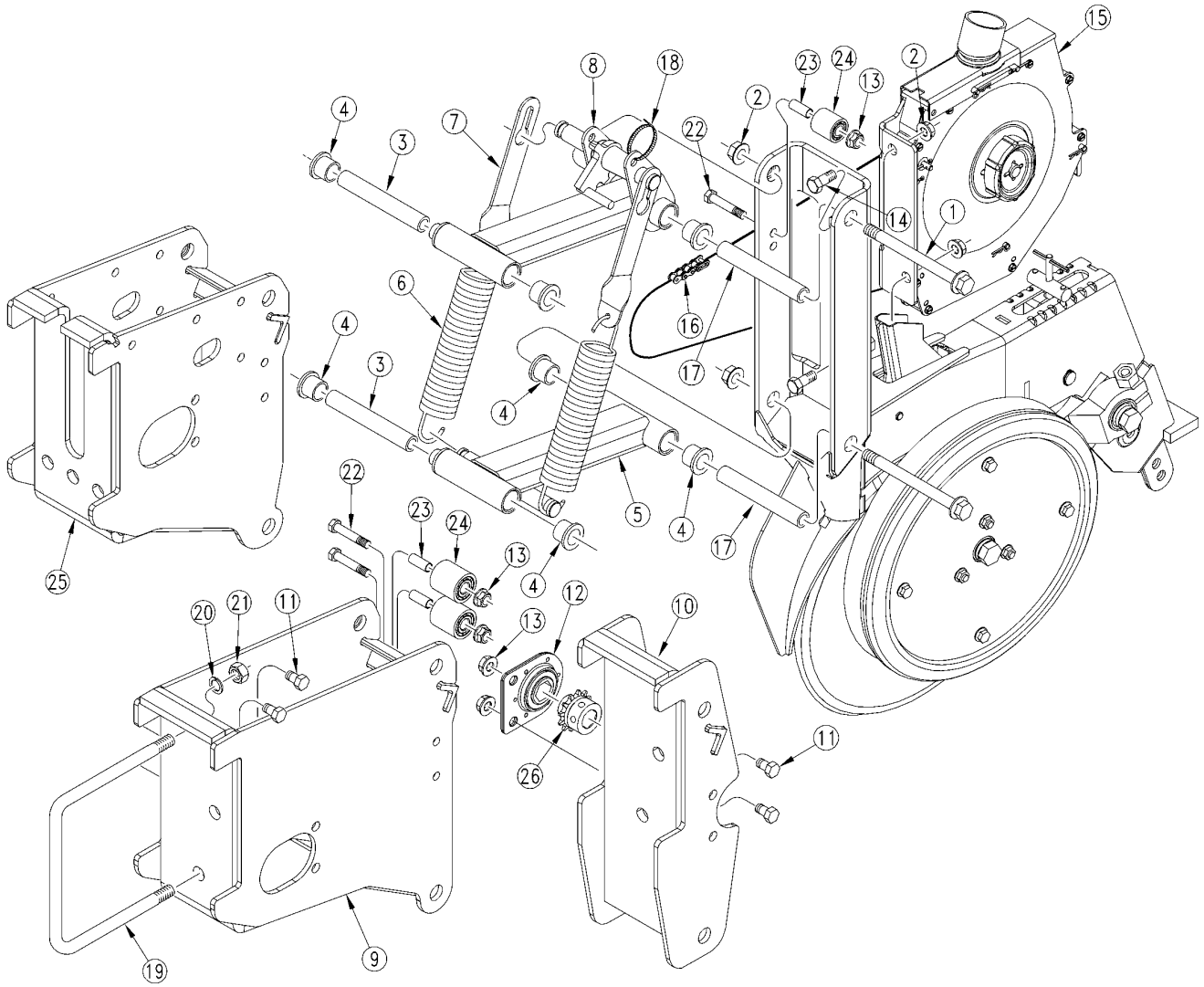

22695

20 Series Opener Arms & Mounts

(Applies to YP40 only)

Ref.	Part No.	Part Description	Comments	Revision
	dwg22695	Image No.		
1.	802-419C	HFS 1/2-13 X 5 3/4		
2.	803-169C	NUT HEX FLG. LOCK 1/2-13 PLT.		
3.	198-246D	SING OPENER INNER PIVOT TUBE		
4.	817-084C	PARALLEL ARM PIVOT BUSHING		
5.	198-619H	SING OPENER LOWER ARM WELDMENT		
6.	807-116C	SPRING EXT 1 5/8OD X 6.6X.177	Used with 1x12 Press Wheels	
6.	807-076C	SPRING EXT 1.575O.D.X.225 WIRE	Used with 1x10 Press Wheels	
7.	198-239D	6 13/16 SPRING STRAP	Used with 807-116 (1x12 Press Wheels)	
7.	198-240D	3 13/32 SPRING STRAP	Used with 807-076C (1x10 Press Wheels)	
8.	198-618H	SING OPENER UPPER ARM WELDMENT		
9.	198-614H	PSS OPENER MOUNT REAR WLDMT		
10.	198-613H	PSS OPENER MOUNT FRONT WLDMT		
11.	802-017C	HHCS 3/8-16X1 GR5		
12.	403-059D	SPKT 41B12 7/8 HEX W/BEARING	2008-	
12.	822-239C	PEER 7/8 HEX BRG AND MNT	2009+	
13.	803-209C	NUT FLANGE LOCK 3/8-16 PLT		
14.	802-258C	HHCS 1/2-13X1 GR5		
15.	403-104K	PSS METER ASSEMBLY		
16.	136-160D	CHAIN RL #41 81 PITCHES	Front Openers	
16.	136-159D	CHAIN RL #41 124 PITCHES	Rear Openers	
17.	198-247D	20 SER SING FRT INNER PIVOT TB		
18.	800-303C	CABLE TIE 2 DIA MIN - BLK	Used with monitor seed tubes	
19.	806-053C	U-BOLT 5/8-11 X 7 1/32 X 6 1/2		
20.	804-022C	WASHER LOCK SPRING 5/8 PLT		
21.	803-021C	NUT HEX 5/8-11 PLT		
22.	802-114C	HHCS 3/8-16X2 1/2 GR5		
23.	198-257D	IDLER SPACER TUBE 1/2OD X 1.56		
24.	817-480C	IDLER SPOOL 1.44OD X.53B X1.5L		
25.	298-651H	PSS CEN OPNR MOUNT REAR WLDMT		
26.	808-395C	SPKT 41C12 W/SS SPCL PLT	2009+	

20 Series Opener Body

(Applies to YP40 only)

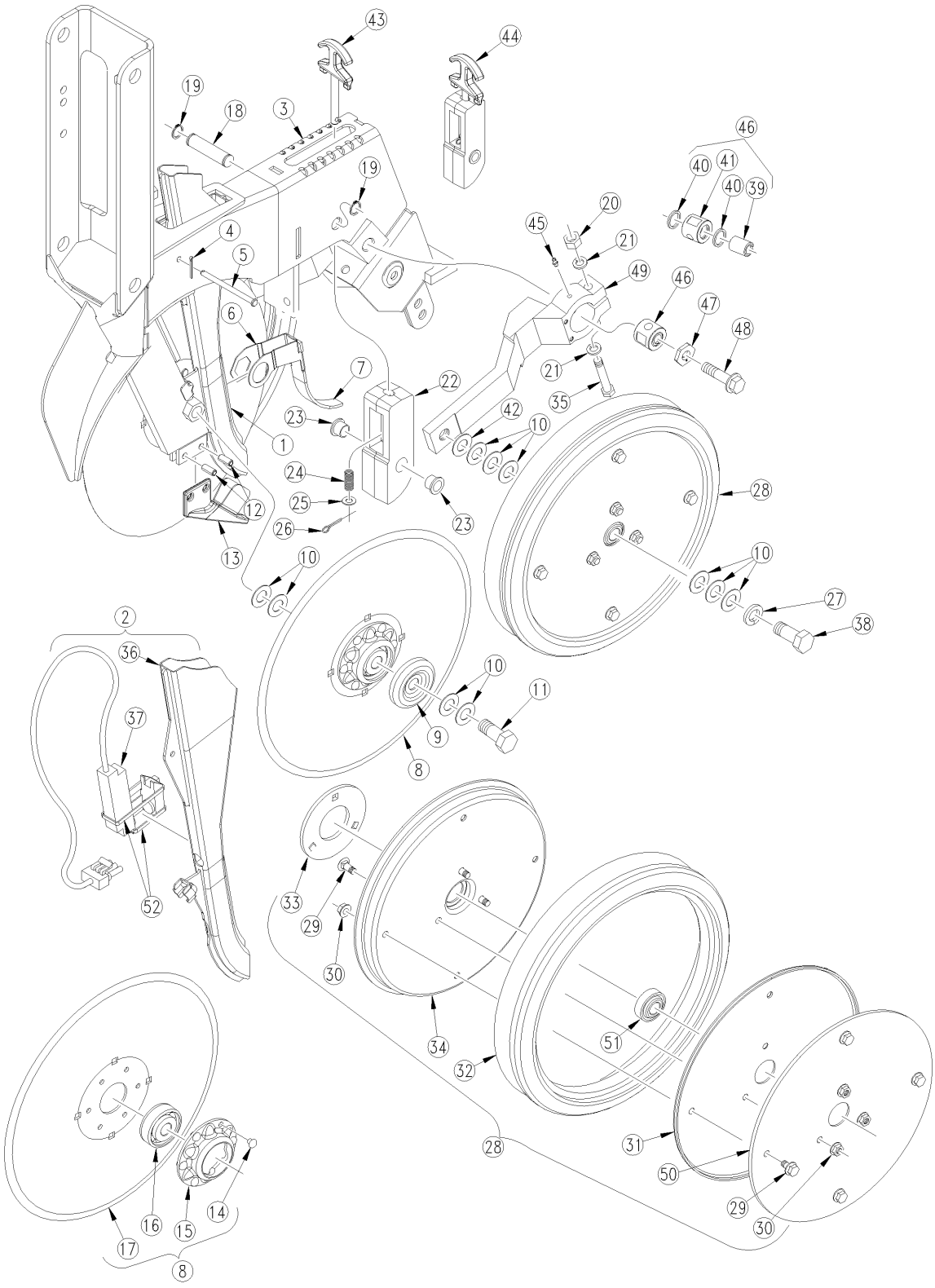

20407

20 Series Opener Body

(Applies to YP40 only)

Ref.	Part No.	Part Description	Comments	Revision
	dwg20407	Image No.		
1.	817-413C	SEED DROP TUBE NO SENSOR HOLE		
2.	198-738S	SEED TUBE W/DJ SENSOR 10&20		
3.	198-615H	20 SERIES SINGULATING OPENER		
4.	805-063C	PIN COTTER 3/32 X 1 LONG		
5.	805-296C	PIN CLEVIS 1/4X1 31/64 USBL		
6.	198-241D	SEED FLAP MOUNTING CLIP, SING		
7.	816-302C	SEED FLAP, RUBBER, SEED-LOK	Used with Seed-Lok (Shown)	
7.	817-349C	SEED FLAP, UHMW, LONG	Used without Seed-Lok	
8.	107-138S	DD W/205 BRG-PLD FLNG-4MM	Includes items 14-17	
9.	107-111D	DD BRG FLANGE DUST COVER		
10.	804-040C	WASHER MACH 1.19 X .63 X 18GA		
11.	802-228C	HHCS 5/8-11X1 1/2 GR5 NYL		
12.	805-335C	PIN ROLL 5/16 X 5/8 PLT		
13.	198-491H	SCRAPER-SPREADER 10-20 SER		
14.	800-213C	RIVET,BUTTON HEAD 1/4 X 1/2		
15.	890-466C	HSG RIBB FLG 6BOLT PLT		
16.	188-001V	BEARING AA205DD		
17.	820-256C	FLAT DISK BLADE-4MM THICK		
18.	198-202D	20 SER OPNR CAM PIN		
19.	800-118C	SNAP RING EXT 5/8 .050 T		
20.	803-307C	NUT HEX 7/16-20 GR8		
21.	804-014C	WASHER LOCK 7/16 PLT		
22.	198-201D	20 SER OPNR PW CAM		
23.	817-083C	PRESS WHEEL ARM PIVOT BUSHING		
24.	807-172C	SPRING COMP 5/8 OD X 1 3/4 LG		
25.	804-012C	WASHER FLAT 3/8 SAE PLT		
26.	805-067C	PIN COTTER 1/8 X 3/4		
27.	804-022C	WASHER LOCK SPRING 5/8 PLT		
28.	198-057S	2X13 DEPTH WHEEL ASSY	Includes items 29-34,50	
29.	802-092C	RHSNB 5/16-18X3/4 GR5		
30.	803-043C	NUT HEX WHIZ 5/16-18 PLT		
31.	814-082C	2X13 D.W. OUTER RIM HALF		
32.	814-083C	2X13 SIDE DEPTH TIRE		
33.	198-183D	20 SER SIDE DEPTH WL STIFF PLT		
34.	814-081C	2X13 D.W. INNER RIM HALF		
35.	802-694C	HHCS 7/16-20 2 3/4 GR8		
36.	817-396C	SEED DROP TUBE W/ SENSOR HOLE		
37.	843-191C	DJ STYLE WIDE SEED SENSOR		
38.	802-430C	HHCS 5/8-11x2 GR5 NYL		
39.	198-266D	20P DEPTH WHL ECCENTRIC BUSHNG		
40.	816-723C	U CUP SEAL		
41.	298-001D	20P DEPTH WHL OUTER BUSHING		
42.	804-195C	WASHER FLAT 1.31ODX.65IDX.188T		
43.	812-302C	CASTING - STAINLESS T-HANDLE		
44.	198-956K	20 SER OPENER T-HANDLE SUBASSY	Includes 22-26,43	
45.	800-001C	GREASE ZERK STRAIGHT 1/4-28		
46.	198-998S	20P ELIMINATOR BUSHING ASSY	Includes item 39-41	
47.	812-328C	20P ECCENTRIC HEX ADJUSTER		
48.	802-729C	HFS 5/8-11X2 1/2 GR8 PLT		
49.	198-265D	20P SIDE DEPTH WHEEL ARM		
50.	198-305D	WHEEL REINFORCING PLATE		
51.	822-095C	BRG INS .63IDX1.57OD DBL LIP		
52.	800-244C	CABLE TIE .19X15 PANDU BT4S-CO		

20 Series Keeton Seed Firmer (Option)

(Applies to YP40 only)

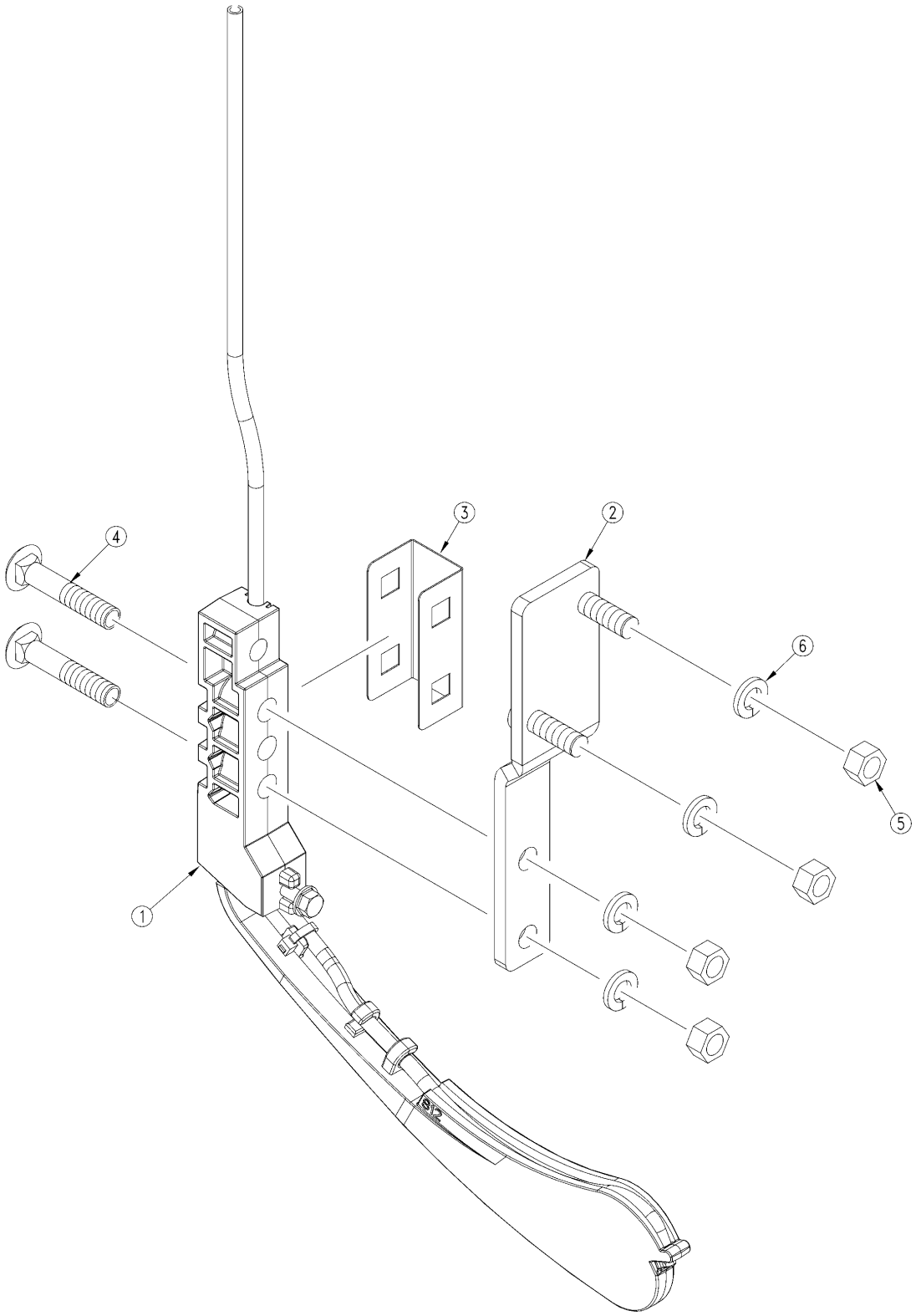

20252

20 Series Keeton Seed Firmer (Option)

(Applies to YP40 only)

Ref.	Part No.	Part Description	Comments	Revision
	dwg20252	Image No.		
1.	120825	KEETON NARROW TAIL		
2.	129001	KEETON BRACKET 10/20 SERIES		
3.	129BXT827	KEETON GUARD		
4.	802-411C	RHSNB 3/8-16X2 GR5		
5.	803-014C	NUT HEX 3/8-16 PLT		
6.	804-013C	WASHER LOCK SPRING 3/8 PLT		

20 Series Seed-Lok (Option)

(Applies to YP40 only)

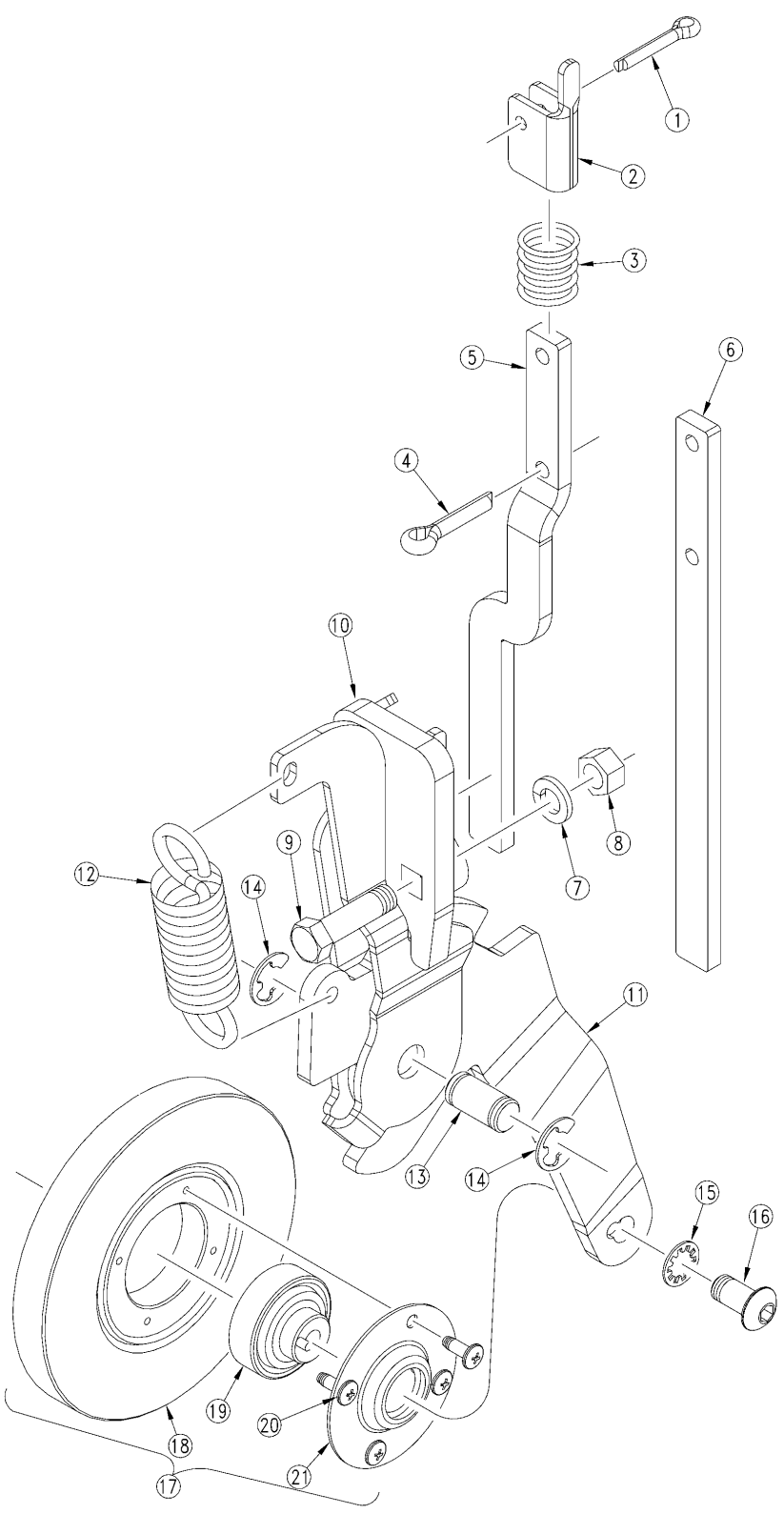

26100

20 Series Seed-Lok (Option)

(Applies to YP40 only)

Ref.	Part No.	Part Description	Comments	Revision
	dwg26100	Image No.		
1.	805-069C	PIN COTTER 3/16 X 1		
2.	122-166D	SEED LOCK LOCK-UP CAM		
3.	807-188C	SPRING COMP .85ODX2.0LGX.067W		
4.	805-020C	PIN COTTER 1/4 X 1 PLT		
5.	122-167D	10 SER SEED LOCK LOCK-UP BAR	Shown	
6.	122-165D	20 SER SEED LOCK LOCK-UP BAR		
7.	804-013C	WASHER LOCK SPRING 3/8 PLT		
8.	803-014C	NUT HEX 3/8-16 PLT		
9.	802-022C	HHCS 3/8-16X1 1/2 GR5		
10.	122-250H	SEED LOCK MOUNT, SINGULATING		
11.	122-164D	SEED LOCK ARM, SINGULATING		
12.	807-101C	SPRING, 1 O.D.X.125WIREX 3 1/2		
13.	122-120D	5 SEED-LOK WHL ARM PIVOT PIN		
14.	800-093C	RING SNAP EXTERNAL '"E"' 1/2		
15.	804-078C	WASHER INTERNAL STAR 3/8 PLT.		
16.	801-078C	SCR HX SKT BUT CP 3/8-16X3/4	20 Series only	
17.	122-201S	SD-LK 203 BEARING WHEEL ASSY		
18.	817-134C	5/8 X 5 SEED FIRMING WHEEL		
19.	188-008V	BEARING 203 SEED-LOK WITH PIN		
20.	801-084C	SCR PH THD FMG #10X1/2 TP ZP		
21.	816-173C	RETAINER W/BONDED SEAL 4BLT		

25 Series Opener Arms & Mounts

(Applies to YP40 only)

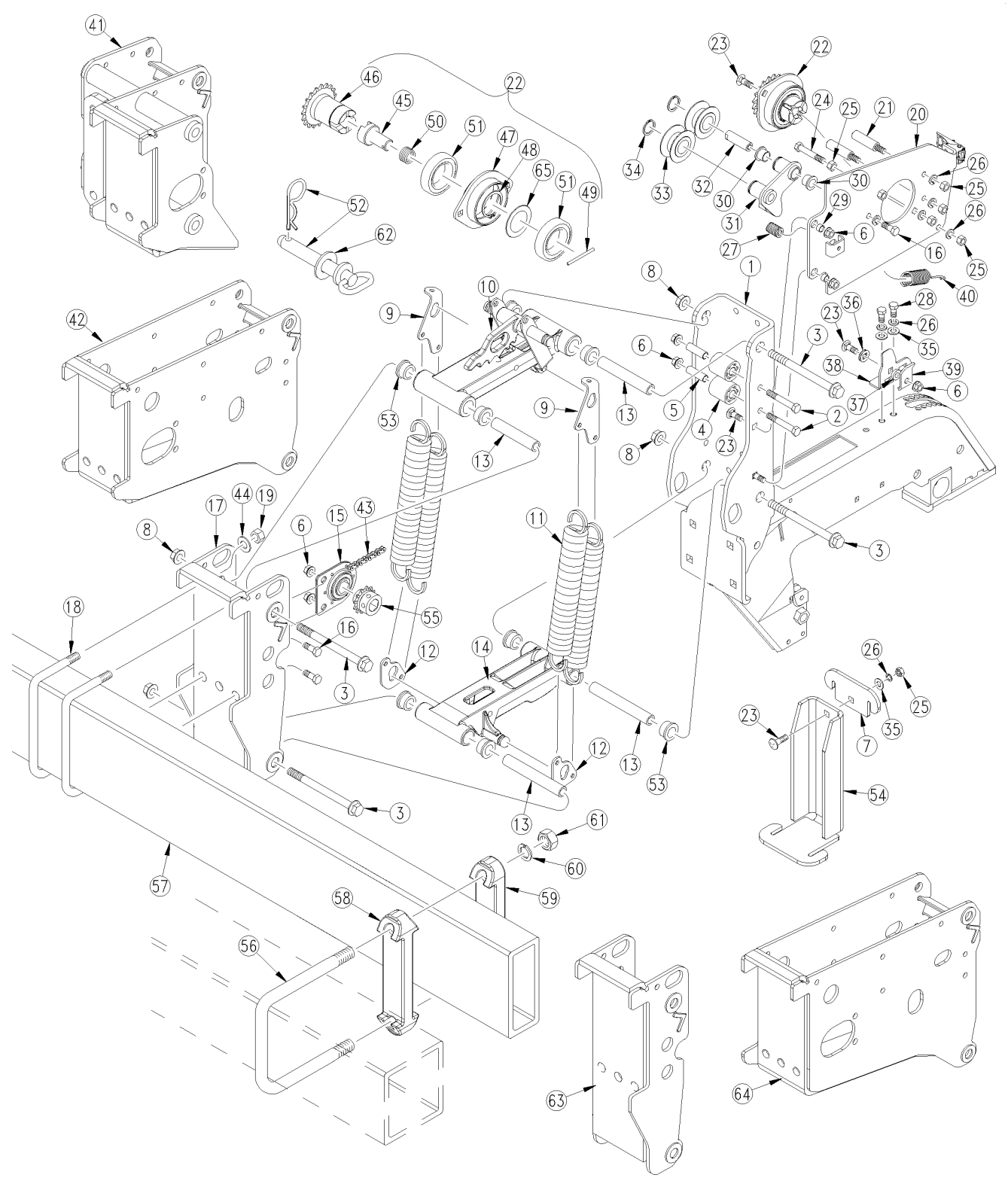

29258

25 Series Opener Arms & Mounts

(Applies to YP40 only)

Ref.	Part No.	Part Description	Comments	Revision
	dwg29258	Image No.		
1.	298-509H	25 SERIES OPENER SHANK WELDMT		
2.	802-114C	HHCS 3/8-16X2 1/2 GR5		
3.	802-745C	HFS 1/2-13X6 GR5 PLT		
4.	817-480C	IDLER SPOOL 1.44OD X.53B X1.5L	Used with Middle and Rear Opener Mount.	
4.	198-333D	1 1/4 LONG PLASTIC CHAIN IDLER	Used with Front Opener Mount.	
5.	198-257D	IDLER SPACER TUBE 1/2OD X 1.56	Used with Middle and Rear Opener Mount.	
5.	198-332D	IDLER SPACER TUBE 1/2OD X 1.31	Used with Front Opener Mount.	
6.	803-209C	NUT FLANGE LOCK 3/8-16 PLT		
7.	198-335D	TWIN ROW SPACER BRACKET UPPER	Twin row only	
8.	803-169C	NUT HEX FLG. LOCK 1/2-13 PLT.		
9.	198-292D	25P UPPER SPRING LINK		
10.	288-374H	25 SERIES UPPER PARALLEL ARM	Shown (S/N B1033A+)	
10.	298-513H	25 SERIES UPPER PARALLEL ARM	(S/N B1032A-)	
11.	807-076C	SPRING EXT 1.575 OD X .225 W		
12.	198-293D	25P LOWER SPRING LINK		
13.	198-295D	25P REAR OPENER INNER PIVOT TB		
14.	403-667D	25 SRS LOWER PARALLEL ARM	Shown (S/N B1033A+)	
14.	298-510H	25 SERIES LOWER PARALLEL ARM	(S/N B10332A-)	
15.	822-239C	PEER 7/8 HEX BRG AND MNT		
16.	802-017C	HHCS 3/8-16X1 GR5		
17.	298-883S	25P FRONT OPENER MOUNT W/BUSH		
18.	806-212C	U-BOLT 5/8-11X7 1/32X4 1/2 GR5		
19.	803-021C	NUT HEX 5/8-11 PLT		
20.	403-113H	DRIVE MOUNT WELDMENT		
21.	403-107D	DRIVE PLATE LINE-UP PIN		
22.	403-117S	DRIVE BEARING ASSEMBLY	Includes items 45-51 & 65	
23.	802-015C	RHSNB 3/8-16X1 GR5		
24.	802-382C	HHCS 3/8-16X2 1/4 GR5		
25.	803-014C	NUT HEX 3/8-16 PLT		
26.	804-013C	WASHER LOCK SPRING 3/8 PLT		
27.	807-232C	SPRING COMP DIE.75X.375X1LX515		
28.	801-078C	SCR HX SKT BUT CP 3/8-16X3/4		
29.	403-182D	9/16 OD DRIVE PLATE SPACER TB		
30.	817-083C	PRESS WHEEL ARM PIVOT BUSHING		
31.	403-115H	IDLER BRACKET WELDMENT		
32.	891-191C	IDLER PIVOT 2.06 LONG		
33.	817-406C	IDLER 1 PC 2.38X1.01X1.062		
34.	800-085C	SNAP RING EXT 1 HEAVY		
35.	804-012C	WASHER FLAT 3/8 SAE PLT		
36.	804-042C	WASHER GRASS SEEDER CUP SHAFT		
37.	403-108D	METER ALIGNMENT BUSHING		
38.	403-112D	METER RETAINER LATCH PLATE		
39.	403-111D	METER RETAINER PLATE		
40.	807-236C	SPRING EXT. 1.0ODX5.OLX.095MW		
41.	288-370H	25P RH OFFSET MOUNT MID 15		
42.	298-887S	25P REAR OPENER MOUNT W/BUSH		
43.	136-214D	CHAIN RL #41 90 PITCHES		
43.	136-215D	CHAIN RL #41 116 PITCHES		
43.	136-216D	CHAIN RL #41 144 PITCHES		
44.	804-022C	WASHER LOCK SPRING 5/8 PLT		
45.	403-104D	DRIVE JAW		
46.	403-112H	19T SPROCKET HUB ASSY		
47.	403-116H	DRIVE BEARING HOUSING		
48.	800-365C	SNAP RING EXT 45MM		
49.	805-117C	PIN ROLL 1/4 X 2 1/2 PLT		

25 Series Opener Arms & Mounts (continued)

(Applies to YP40 only)

Ref	Part No.	Part Description	Comments	Revision
50.	807-174C	SPRING COMP .970ODX.063WX1.25		
51.	822-210C	BRG 45MM ID 75MM OD 16MM		
52.	805-435C	PIN HITCH 5/8 X 5 3/4 USABLE		
53.	817-084C	PARALLEL ARM PIVOT BUSHING		
54.	198-334D	TWIN ROW SPACER BRACKET LOWER	Twin row only	
55.	808-395C	SPKT 41C12 W/SS SPCL PLT		
56.	806-193C	U-BOLT 3/4-10 X 7 1/32 X 9 3/4		
57.	411-481D	16 WING UNIT TUBE	Used with wing 30", 70CM, 15" even LH Wing, 70cmTR & 30"TR	
57.	411-251D	LIFT ARM PIVOT PLATE	Used with Center 30", 15", 70cmTR & 30"TR	
57.	411-567D	TUBE RCT 7X3X1/4X147.5	Used with 10"	
57.	411-391D	TUBE RCT 7X3X1/4X175 1/2	Used with Center 10", 35cm	
57.	411-583D	TUBE RECT 7X3X.25X118.0	Used with wing 35cm	
57.	411-566D	TUBE RCT 7X3X1/4X154	Used with wing, RH, 15" Even row	
58.	812-357C	CAST SPACER 7 IN TUBES MIDDLE		
59.	812-358C	CAST SPACER 7 IN TUBES CAP		
60.	804-023C	WASHER LOCK SPRING 3/4 PLT		
61.	803-027C	NUT HEX 3/4-10 PLT		
62.	804-019C	WASHER FLAT 5/8 USS PLT		
63.	498-228H	25P CLIPPED FRONT MOUNT	Used with Twin Row 30" Spacing only	
64.	498-229H	25P CLIPPED REAR MOUNT	Used with Twin Row 30" Spacing only	
65.	403-312D	BRG SPACER RING		

25 Series Opener Arms & Mounts (continued)

(Applies to YP40 only)

This Page Intentionally Left Blank

25 Series Opener Body

(Applies to YP40 only)

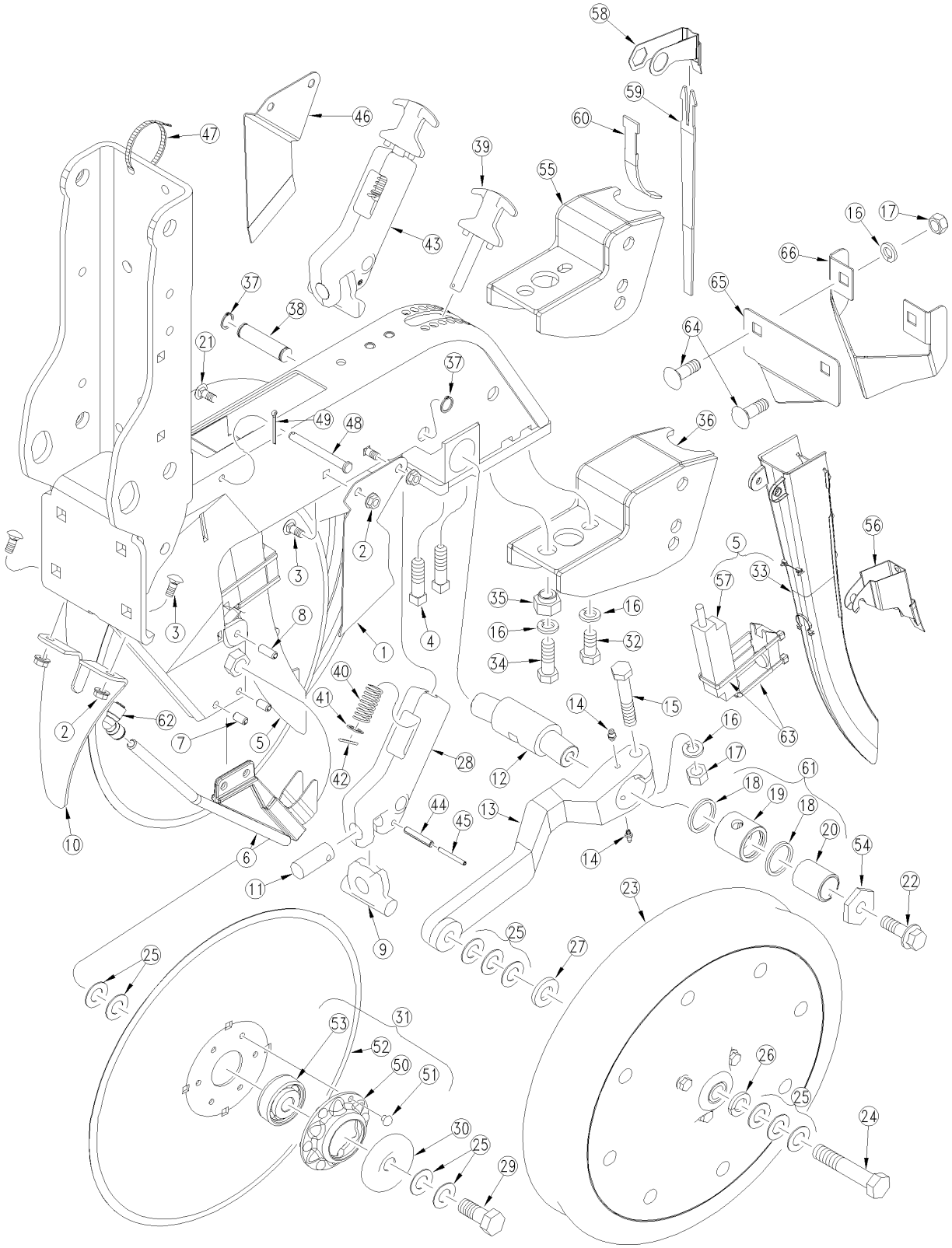

21853

25 Series Opener Body

(Applies to YP40 only)

Ref.	Part No.	Part Description	Comments	Revision
	dwg21853	Image No.		
1.	404-153D	SCRAPER, DISC LH		
2.	803-043C	NUT HEX WHIZ 5/16-18 PLT		
3.	802-092C	RHSNB 5/16-18X3/4 GR5		
4.	801-164C	1/2-13X 1 3/4 SQ HD SS G5 PLTD		
5.	403-214S	SEED TUBE FPU TB,CLIP & SENSOR		
6.	404-796H	25P SCRAPER SEP WLDMT 3/8 FRT		
7.	805-335C	PIN ROLL 5/16 X 5/8 PLT		
8.	805-250C	PIN ROLL 5/16 X 7/8		
9.	404-077D	WALKBEAM		
10.	404-198D	DISK SHIELD		
11.	404-079D	WALKBEAM PIVOT PIN		
12.	404-119D	SPINDLE, GA WHL MNT ADJ	Used on wide 20" & 30" rows	
12.	198-288D	25P SIDE DEPTH WHL ARM SPINDLE	Shown, Used on narrow, twinrow, 15"	
13.	198-289D	25P SIDE DEPTH WHEEL ARM	Shown, Used on, twinrow 15"	
13.	404-155D	ARM, GAUGE WHEEL	Used on 20" & 30" rows	
14.	800-001C	GREASE ZERK STRAIGHT 1/4-28		
15.	802-039C	HHCS 1/2-13X3 GR5		
16.	804-015C	WASHER LOCK SPRING 1/2 PLT		
17.	803-020C	NUT HEX 1/2-13 PLT		
18.	816-686C	U CUP SEAL		
19.	198-360D	OUTER BUSHING INNER CUP SEAL I	Shown, Used on twinrow, 15"	
19.	404-214D	25P O-RING BUSHING	Used on 20" & 30" rows	
20.	198-290D	25P DEPTH WHL ECCENTRIC BUSHNG	Shown, Used on twinrow, 15"	
20.	404-174D	ECCENTRIC BUSHING	Used on 20" & 30" rows	
21.	802-172C	HHCS 5/16-18X2 1/2 GR5		
21.	802-092C	RHSNB 5/16-18X3/4 GR5		
22.	802-663C	HFS 1/2-13 X 1 1/2 GR8 NYL PLT		
23.	814-257C	2.5X16 SIDE DEPTH WHEEL ASSY	Refer to "Side Depth Wheel Assembly" for breakdown	
23.	814-260C	3X16 SIDE DEPTH WHEEL ASSY	Refer to "Side Depth Wheel Assembly" for breakdown	
23.	814-173C	4 X 16 GAUGE TIRE ASSY-PLASTIC	Refer to "Side Depth Wheel Assembly" for breakdown	
24.	802-160C	HHCS 5/8-11X3 1/4 GR5	Used on twinrow only	
24.	802-646C	HHCS 5/8-11 X 3 GR8	Used on 15", 20" & 30" rows	
25.	804-040C	WASHER MACH 1.19 X .63 X 18GA		
26.	804-022C	WASHER LOCK SPRING 5/8 PLT		
27.	804-195C	WASHER FLAT 1.31ODX.65IDX.188T	Used on twinrow only	
28.	404-078D	WALKBEAM MOUNT		
29.	802-228C	HHCS 5/8-11X1 1/2 GR5 NYL		
30.	107-111D	DD BRG FLANGE DUST COVER		
31.	404-121S	4.0 MM 15 DISC W/ 5/8 ASSY	Includes items 50-53	
32.	802-258C	HHCS 1/2-13X1 GR5		
33.	817-715C	SEED TUBE 25S FPU TB&CAP W/ HL		
34.	802-091C	HHCS 1/2-13X1 1/2 GR5		
35.	405-032D	1X12 PW ADJUSTER		
36.	199-141H	LONG PW MOUNT	Used on short (front) row stagger on twin rows. (S/N B1033A+)	
36.	199-108H	RPBY 199-146A	(S/N B1032A-)	
37.	800-118C	SNAP RING EXT 5/8 .050 T		
38.	198-202D	20 SER OPNR CAM PIN		
39.	404-020D	PLANTER HANDLE		
40.	807-119C	SPRING COMP .72 X 1.5 X .072WD		
41.	804-100C	WASHER 3/4 X 17/32 X 18 GA PLT		
42.	805-063C	PIN COTTER 3/32 X 1 LONG		
43.	404-014S	ADJUSTMENT ASSY	Includes items 9, 11, 28, 39-42, 44 & 45	

25 Series Opener Body (continued)

(Applies to YP40 only)

Ref	Part No.	Part Description	Comments	Revision
44.	805-180C	PIN ROLL 1/4 X 1 1/2 LG PLT		
45.	805-290C	PIN ROLL 5/32 X 1 1/2 PLT		
46.	404-152D	SCRAPER, DISC RH		
47.	800-112C	CABLE TIE .19X7.25 1.75D 50LB		
48.	805-278C	PIN CLEVIS 1/4 X 2 1/2 PLT		
49.	805-063C	PIN COTTER 3/32 X 1 LONG		
50.	890-466C	HSG RIBB FLG 6BOLT PLT		
51.	800-213C	RIVET,BUTTON HEAD 1/4 X 1/2		
52.	820-287C	4.0 MM 15 DISK (21 DEG BEVEL)		
53.	188-001V	BEARING AA205DD		
54.	812-327C	25P ECCENTRIC HEX ADJUSTER		
55.	199-141H	25P MID PW MOUNT	Used on rear (long) row stagger rows on twinrow. (S/N B1033A+)	
55.	199-109H	RPBY 199-147A	(S/N B1032A-)	
56.	198-331D	SEED TUBE 25S HOOK CLIP		
57.	843-191C	DJ STYLE WIDE SEED SENSOR		
58.	404-189D	25 SERIES SEED FLAP CLIP		
59.	817-349C	SEED FLAP, UHMW, LONG	S/N B1024A-	
60.	816-302C	SEED FLAP, RUBBER, SEED-LOK	S/N B1025A+	
61.	298-881S	25P WIDE ELIMINATOR BUSHNG ASY	Includes items 18-20. Used with 30" spacing and 4" depth wheels.	
61.	298-882S	25P NARROW ELIMINATOR BUSH ASY	Includes items 18-20. Used with 2 1/2" and 3" depth wheels.	
62.	830-424C	ELBOW PTC 1/4 X 3/8		
63.	800-244C	CABLE TIE .19X15 PANDU BT4S-CO		
64.	802-106C	RHSNB 1/2-13X1 1/2 GR5		
65.	404-255D	TOP COVER		
66.	404-254D	COVER		

25 Series Opener Body (continued)

(Applies to YP40 only)

This Page Intentionally Left Blank

25 Series Keeton Seed Firmer (Option)

(Applies to YP40 only)

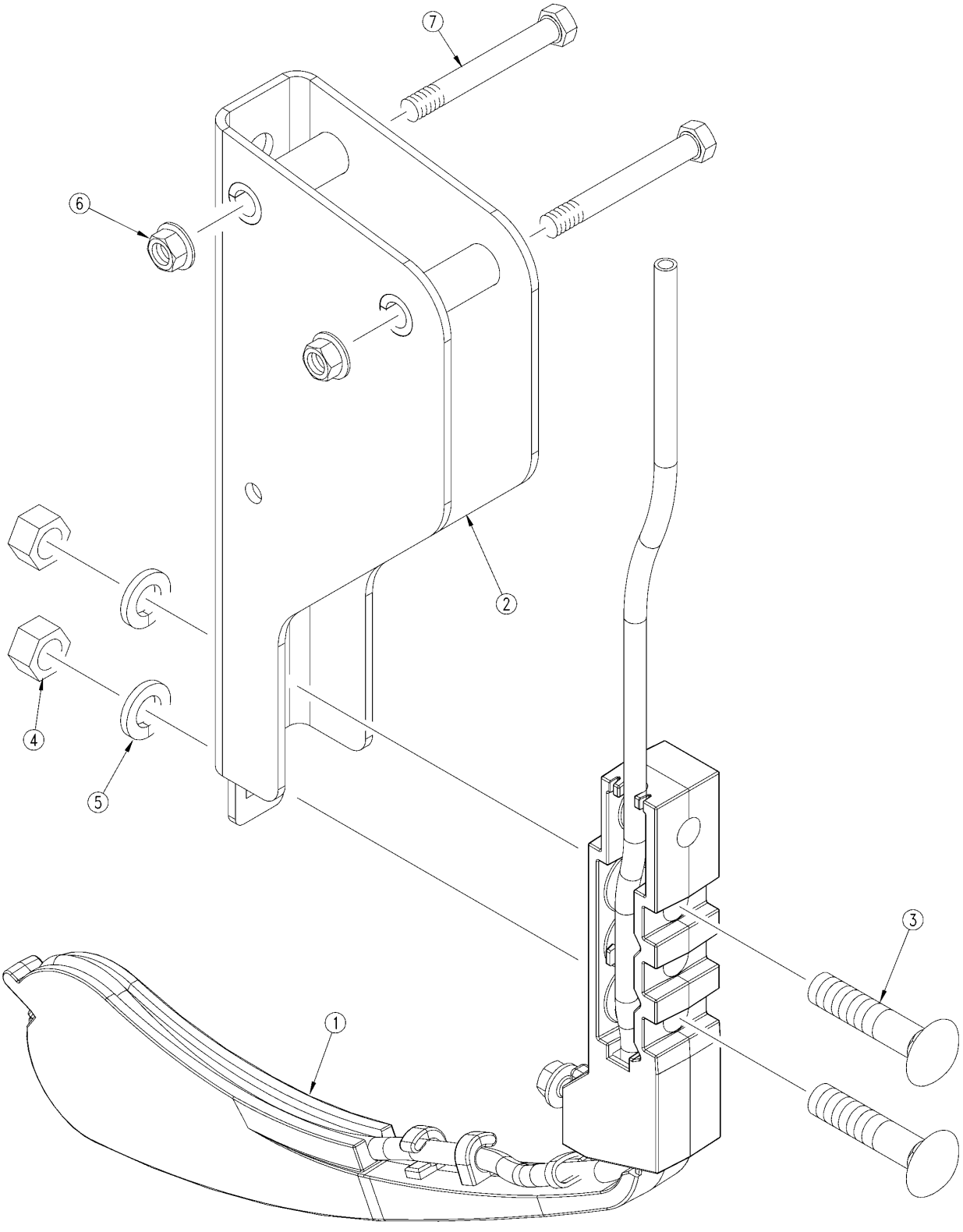

21855

25 Series Keeton Seed Firmer (Option)

(Applies to YP40 only)

Ref.	Part No.	Part Description	Comments	Revision
	dwg21855	Image No.		
1.	120825	KEETON NARROW TAIL		
2.	129BXT822	BRACKET FOR 890-840C REV A&B		
3.	802-252C	RHSNB 3/8-16X1 3/4 GR5		
4.	803-014C	NUT HEX 3/8-16 PLT		
5.	804-013C	WASHER LOCK SPRING 3/8 PLT		
6.	803-043C	NUT HEX WHIZ 5/16-18 PLT		
7.	802-172C	HHCS 5/16-18X2 1/2 GR5		

HD10 Opener Arms And Mounts

(Applies to YP40 only)

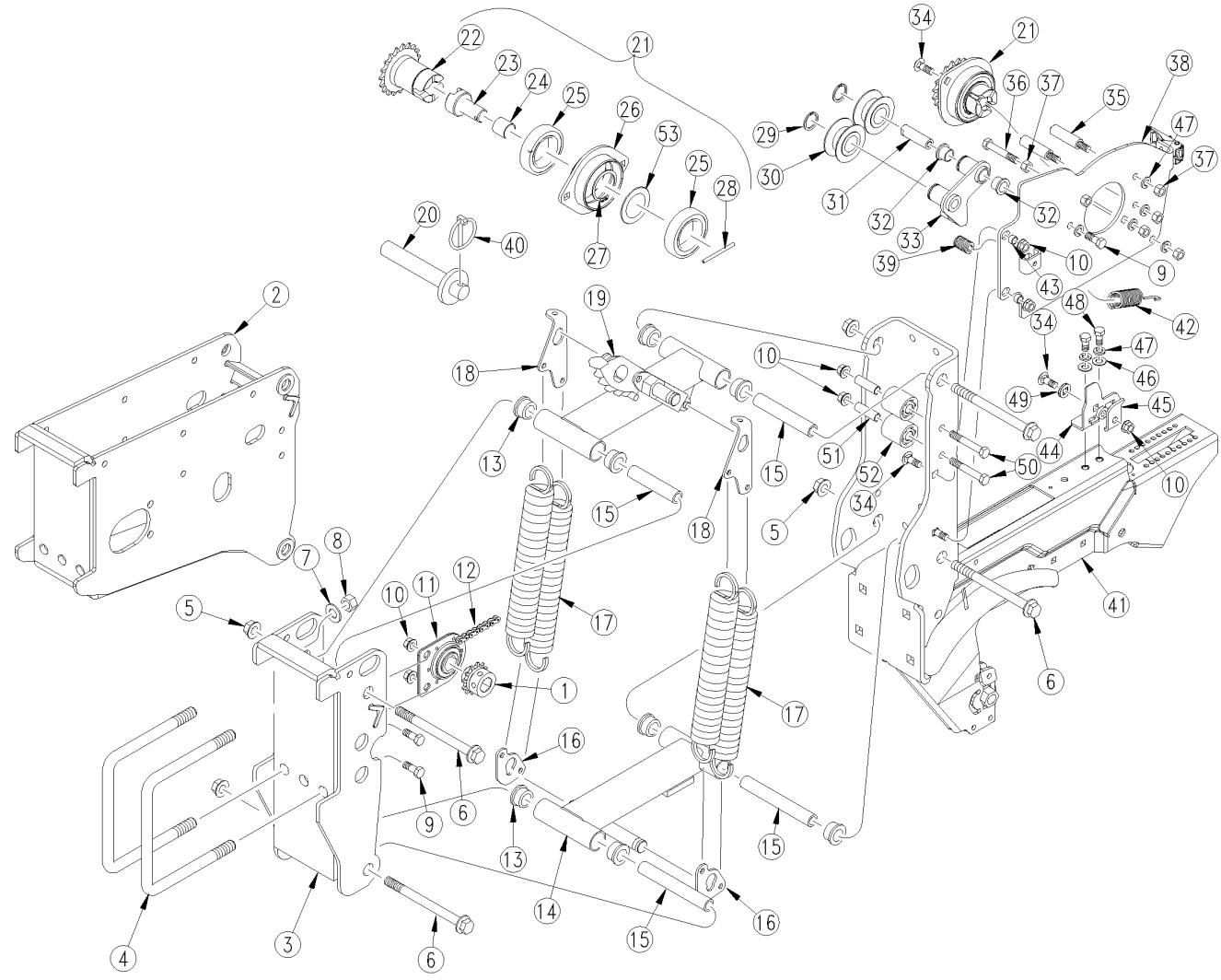

29190

HD10 Opener Arms And Mounts

(Applies to YP40 only)

Ref.	Part No.	Part Description	Comments	Revision
	dwg29190	Image No.		
1.	808-395C	SPKT 41C12 W/SS SPCL PLT		
2.	298-856H	HD10P REAR OPENER MOUNT WELDMT		
3.	298-884H	25P FRONT OPENER MOUNT WELDMT		
4.	806-053C	U-BOLT 5/8-11 X 7 1/32 X 6 1/2		
5.	803-169C	NUT HEX FLG. LOCK 1/2-13 PLT.		
6.	802-745C	HFS 1/2-13X6 1/8GR5 PLT		
7.	804-022C	WASHER LOCK SPRING 5/8 PLT		
8.	803-021C	NUT HEX 5/8-11 PLT		
9.	802-017C	HHCS 3/8-16X1 GR5		
10.	803-209C	NUT FLANGE LOCK 3/8-16 PLT		
11.	403-059D	SPKT 41B12 7/8 HEX W/BRG		
11.	822-239C	PEER 7/8 HEX BRG AND MNT		
12.	136-214D	CHAIN RL #41 90 PITCHES		
12.	136-206D	CHAIN RL #41 132 PITCHES		
13.	817-084C	PARALLEL ARM PIVOT BUSHING		
14.	298-510H	25 SERIES LOWER PARALLEL ARM		
15.	198-295D	25P REAR OPENER INNER PIVOT TB		
16.	198-293D	25P LOWER SPRING LINK		
17.	807-076C	SPRING EXT 1.575 OD X .225 W		
18.	198-292D	25P UPPER SPRING LINK		
19.	298-513H	25 SERIES UPPER PARALLEL ARM		
20.	398-456H	LOCKUP PIN FOR 10HD OPENER		
21.	403-117S	DRIVE BRG ASSEMBLY	Includes items 22-28 & 53.	
22.	403-112H	19T SPROCKET HUB ASSY		
23.	403-104D	DRIVE JAW		
24.	807-174C	SPRING COMP .970ODX.063WX1.25		
25.	822-210C	BRG BALL 45IDX7ODX16W		
26.	403-116H	DRIVE BRG HOUSING		
27.	800-365C	SNAP RING EXT 45MM		
28.	805-062C	PIN ROLL 3/16 X 2 1/2 LG. PTL.		
29.	800-085C	SNAP RING EXT 1 HEAVY		
30.	817-406C	IDLER 1 PC 2.38X1.01X1.062		
31.	891-191C	IDLER PIVOT 2.06 LONG		
32.	817-083C	PRESS WHEEL ARM PIVOT BUSHING		
33.	403-115H	IDLER BRACKET WELDMENT		
34.	802-015C	RHSNB 3/8-16X1 GR5		
35.	403-107D	DRIVE PLATE LINE-UP PIN		
36.	802-382C	HHCS 3/8-16X2 1/4 GR5		
37.	803-014C	NUT HEX 3/8-16 PLT		
38.	403-113H	DRIVE MOUNT WELDMENT		
39.	807-232C	SPRING COMP DIE.75X.375X1LX515		
40.	805-240C	PIN LINCH 3/16 X 1 9/16 LONG		
41.	298-855H	HD10P OPENER WELDMENT		
42.	807-236C	SPRING EXT. 1.0ODX5.OLX.095MW		
43.	403-182D	9/16 OD DRIVE PLATE SPACER TB		
44.	403-112D	METER RETAINER LATCH PLATE		
45.	403-111D	METER RETAINER PLATE		
46.	804-012C	WASHER FLAT 3/8 SAE PLT		
47.	804-013C	WASHER LOCK SPRING 3/8 PLT		
48.	801-078C	SCR HX SKT BUT CP 3/8-16X3/4		
49.	804-042C	WASHER GRASS SEEDER CUP SHAFT		
50.	802-114C	HHCS 3/8-16X2 1/2 GR5		
51.	198-257D	IDLER SPACER TUBE 1/2OD X 1.56		
52.	817-480C	IDLER SPOOL 1.44OD X.53B X1.5L		
53.	403-312D	BRG SPACER RING		

HD10 Opener Body

(Applies to YP40 only)

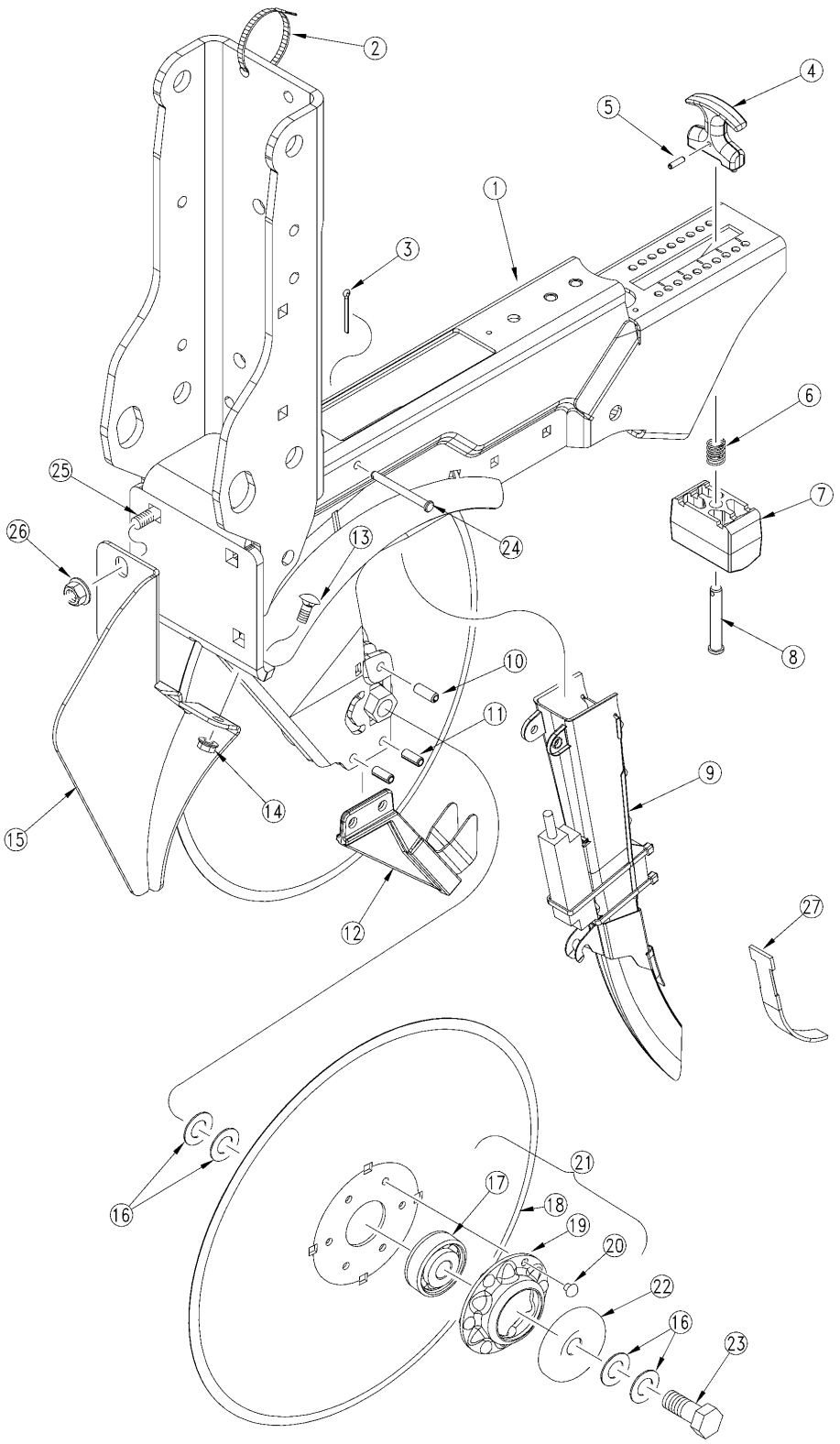

27112

HD10 Opener Body

(Applies to YP40 only)

Ref.	Part No.	Part Description	Comments	Revision
	dwg27112	Image No.		
1.	298-855H	HD10P OPENER WELDMENT		
2.	800-124C	CLAMP WRM DRV #24 SS (1.06-2)		
3.	805-063C	PIN COTTER 3/32 X 1 LONG		
4.	817-328C	T-HANDLE ASSEMBLY		
5.	805-186C	PIN ROLL 5/32 X 5/8 PLT		
6.	807-106C	SPRING .540 O.D.X 1 1/4 X.054W		
7.	817-347C	OPENER TRUNION		
8.	805-154C	PIN CLEVIS 3/8 X 2 1/8 USABLE		
9.	403-214S	SEED TUBE FPU TB,CLIP & SENSOR		
10.	805-250C	PIN ROLL 5/16 X 7/8		
11.	805-335C	PIN ROLL 5/16 X 5/8 PLT		
12.	404-170H	25P SCRAPER SEPARATOR WLDMT		
13.	802-092C	RHSNB 5/16-18X3/4 GR5		
14.	803-043C	NUT HEX WHIZ 5/16-18 PLT		
15.	288-310H	TRASH GUARD WELDMENT		
16.	804-040C	WASHER MACH 1.19 X .63 X 18GA		
17.	188-001V	BEARING AA205DD		
18.	820-287C	4.0 MM 15 DISK (21 DEG BEVEL)		
19.	890-466C	HSG RIBB FLG 6BOLT PLT		
20.	800-213C	RIVET,BUTTON HEAD 1/4 X 1/2		
21.	404-121S	4.0 MM 15 DISC W/ 5/8 ASSY	Includes items 17-20	
22.	107-111D	DD BRG FLANGE DUST COVER		
23.	802-228C	HHCS 5/8-11X1 1/2 GR5 NYL		
24.	805-278C	PIN CLEVIS 1/4 X 2 1/2 PLT		
25.	802-183C	RHSNB 1/2-13X1 GR5 LG		
26.	803-169C	NUT HEX FLG. LOCK 1/2-13 PLT.		
27.	817-349C	SEED FLAP, UHMW, LONG	S/N B1024A-	
27.	816-302C	SEED FLAP, RUBBER, SEED-LOK	S/N B1025A+	

HD10 Series Keeton Seed Firmer (Option)

(Applies to YP40 only)

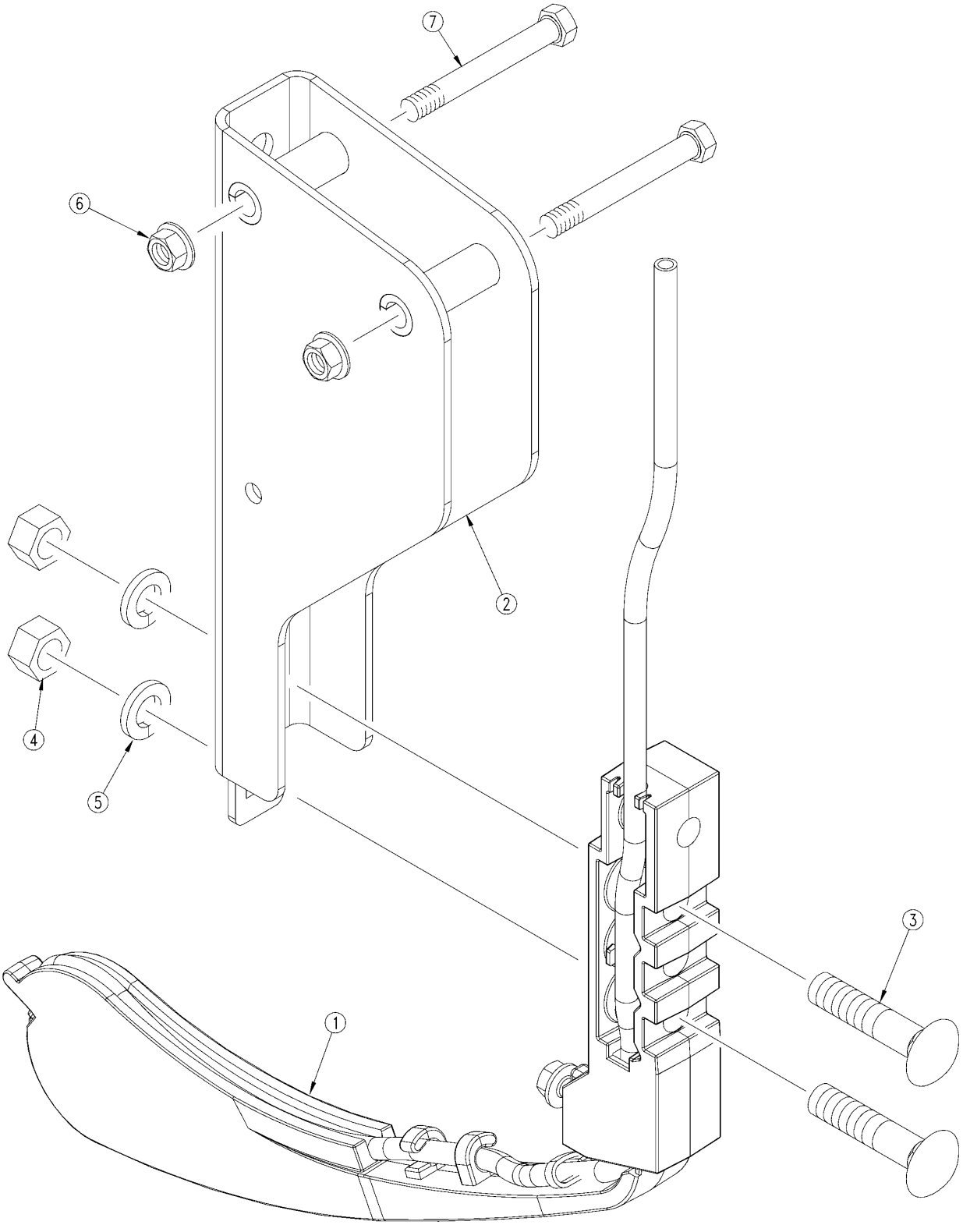

21855

HD10 Series Keeton Seed Firmer (Option)

(Applies to YP40 only)

Ref.	Part No.	Part Description	Comments	Revision
	dwg21855	Image No.		
1.	120825	KEETON NARROW TAIL		
2.	129BXT822	BRACKET FOR 890-840C REV A&B		
3.	802-252C	RHSNB 3/8-16X1 3/4 GR5		
4.	803-014C	NUT HEX 3/8-16 PLT		
5.	804-013C	WASHER LOCK SPRING 3/8 PLT		
6.	803-043C	NUT HEX WHIZ 5/16-18 PLT		
7.	802-172C	HHCS 5/16-18X2 1/2 GR5		

HD10 Series Seed-Lok (Option)

(Applies to YP40 only)

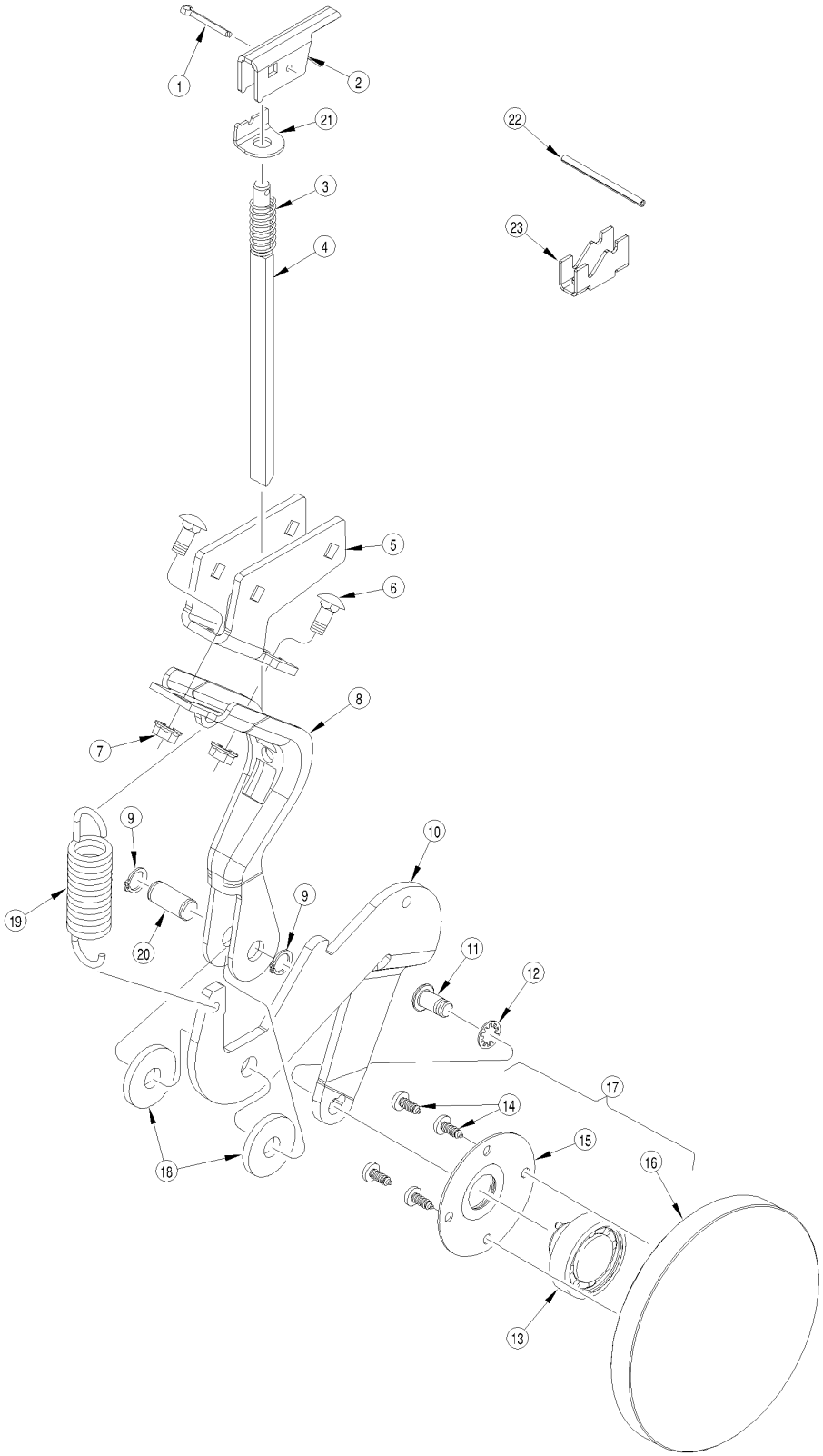

17663

HD10 Series Seed-Lok (Option)

(Applies to YP40 only)

Ref.	Part No.	Part Description	Comments	Revision
	dwg17663	Image No.		
1.	805-045C	PIN COTTER 5/32 X 1 1/4 LG		
2.	404-213D	LEVER, SEED LOK		
3.	807-106C	SPRING .540 O.D.X 1 1/4 X.054W		
4.	404-088H	LOCK ROD WELD		
5.	404-144D	SEED LOK MOUNT		
6.	802-092C	RHSNB 5/16-18X3/4 GR5		
7.	803-043C	NUT HEX WHIZ 5/16-18 PLT		
8.	206-010D	JD KINZE SEED LOK LOWER MOUNT		
9.	800-166C	SNAP RING 1/2 EXTERNAL HEAVY		
10.	404-061D	SEED LOK WHEEL ARM		
11.	801-078C	SCR HX SKT BUT CP 3/8-16X3/4		
12.	804-078C	WASHER INTERNAL STAR 3/8 PLT.		
13.	122-231A	RPBY 188-008V		
14.	801-084C	SCR PH THD FMG #10X1/2 TP ZP		
15.	816-173C	RETAINER W/BONDED SEAL 4BLT		
16.	817-191C	5/8 X 6 SEED LOK WHEEL		
17.	206-014S	6 SEED LOK ASSEMBLY		
18.	804-112C	WASHER 1.5 X .51 X .187		
19.	807-125C	SPRING EXT 1 X 4 X .135 WD		
20.	206-011D	SEED LOK PIVOT PIN		
21.	404-212D	LEVER STOP		
22.	805-191C	PIN ROLL 5/32 X 2 1/2 PLT		
23.	404-348D	LOCK SLIDE		

(Applies to YP40 only)

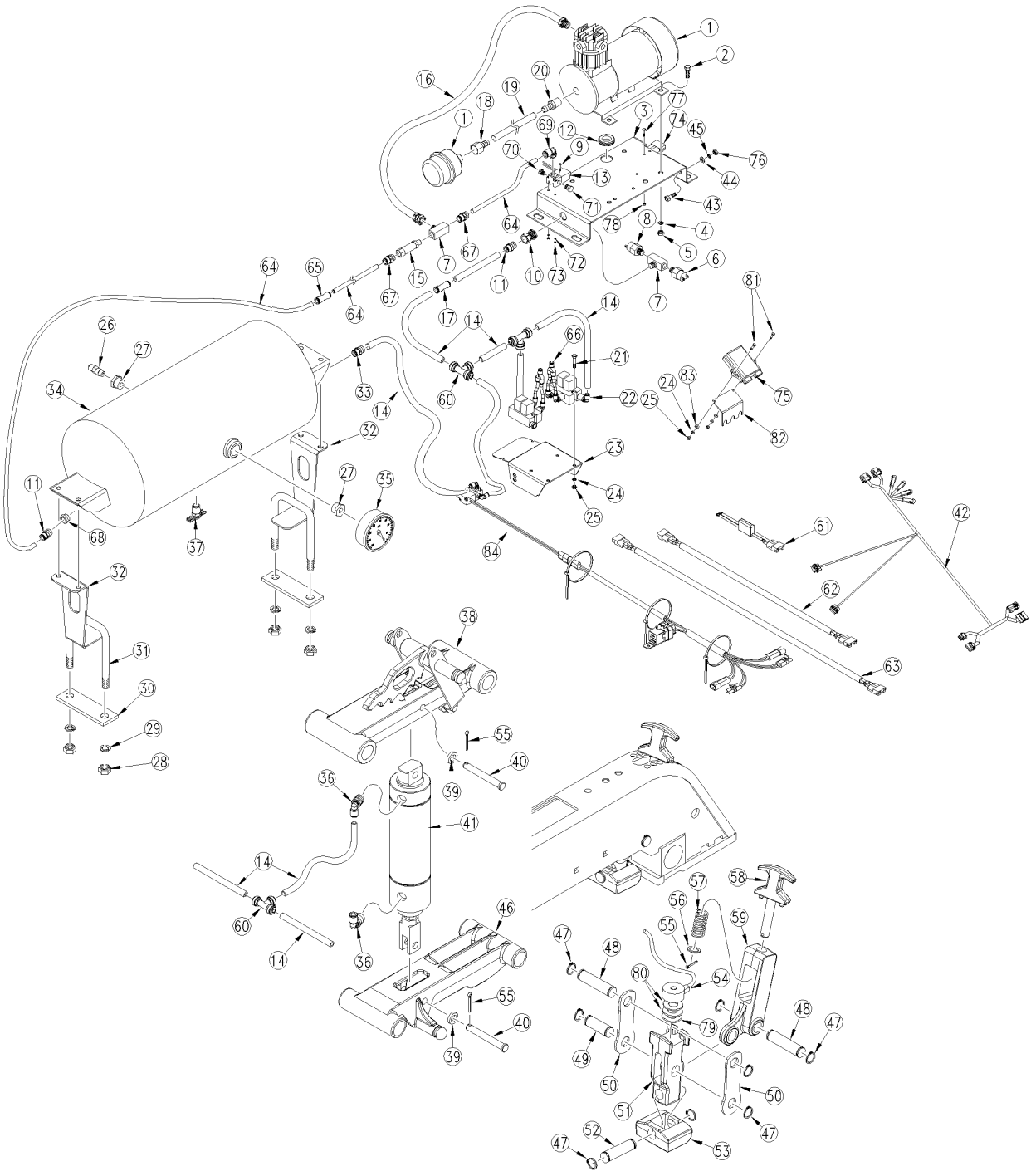

31878

(Applies to YP40 only)

Ref.	Part No.	Part Description	Comments	Revision
	dwg31878	Image No.		
1.	831-088C	12V AIR COMPRESSOR		
2.	802-017C	HHCS 3/8-16X1 GR5		
3.	404-209D	COMPRESSOR MOUNT		
4.	804-013C	WASHER LOCK SPRING 3/8 PLT		
5.	803-014C	NUT HEX 3/8-16 PLT		
6.	833-539C	PRESSURE SWITCH, 150PSIR		
7.	841-503C	TEE 1/4NPT BRASS FXMXF		
8.	833-542C	PRESSURE SWITCH, 135PSIF		
9.	801-233C	SCREW PAN HD #6-32 X 1 PLT		
10.	830-423C	1/4 PIPE BULKHEAD FITTING		
11.	800-367C	AD PUSH 1/4TUBEX1/4MNPT		
12.	816-611C	GROMMET, .75IDX1.25ODX.063		
13.	403-586K	UNLOADER VALVE ASSEMBLY		
14.	990-268R	TUBING NYLON 1/4OD X .17ID GRN		
14.	990-269R	TUBING NYLON 1/4OD X .17ID RED		
15.	830-425C	CHECK VALVE		
16.	891-263C	PTFE HOSE ASM - 1/4 X 36		
17.	830-383C	CP 1/4 PUSH LOK POLY		
18.	830-430C	AD 1/2FNPT X 1/2 BARB BRASS		
19.	990-263R	TUBING 5/8 OD X .5OD BLK NYLON		
20.	830-429C	AD 1/2MNPT X 1/2 BARB BRASS		
21.	802-574C	HSHCS 1/4-20X1 1/2		
22.	833-559C	MAC DA SOLENOID VALVE ASM		
23.	404-220D	MODULE MOUNT		
24.	804-006C	WASHER LOCK SPRING 1/4 PLT		
25.	803-006C	NUT HEX 1/4-20 PLT		
26.	830-431C	RELIEF VALVE		
27.	833-537C	3/4 MNPT X 1/4 FNPT BUSHING		
28.	803-020C	NUT HEX 1/2-13 PLT		
29.	804-015C	WASHER LOCK SPRING 1/2 PLT		
30.	404-208D	TANK MOUNT CAP		
31.	806-144C	U-BOLT 1/2-13 X 3 1/32 X 3		
32.	404-207D	AIR TANK MOUNT		
33.	830-427C	AD 3/8MNPT X 3/8OD TUBE PTC		
34.	891-150C	TANK AIR 1488 CU IN		
35.	829-141C	2 1/2" PRESSURE GAUGE 160 PSI		
36.	830-417C	ELBOW PTC 1/4 X 1/4MNPT		
37.	830-403C	PETCOCK 1/4 BRASS		
38.	288-374H	25 SERIES UPPER PARALLEL ARM		
39.	404-219D	3/8 ID X 5/8 OD X .125 SPCR		
40.	805-385C	PIN CLEVIS 3/8 X 3 PLT		
41.	810-701C	2"DIA X 3.25" STROKE DA CYL		
42.	468100210	DJ HARNESS, DOWN PRESSURE		
43.	802-575C	HSHCS #10-32X5/8		
44.	804-046C	WASHER FLAT #10 SAE PLT		
45.	804-054C	WASHER LOCK #10		
46.	403-667D	25 SRS LOWER PARALLEL ARM		
47.	800-118C	SNAP RING EXT 5/8 .050 T		
48.	198-202D	20 SER OPNR CAM PIN		
49.	404-192D	PIVOT PIN		
50.	404-203D	SIDE STRAP		
51.	403-725D	INNER STOP MOUNT		
52.	404-204D	BEAM PIVOT PIN		
53.	812-374C	CAST WALK BEAM		
54.	833-531C	MS FC23 LOAD CELL		
55.	805-063C	PIN COTTER 3/32 X 1 LONG		
56.	804-100C	WASHER 3/4 X 17/32 X 18 GA PLT		

Row-Pro (continued)

(Applies to YP40 only)

Ref	Part No.	Part Description	Comments	Revision
57.	807-119C	SPRING COMP .72 X 1.5 X .072WD		
58.	404-020D	PLANTER HANDLE		
59.	403-724D	STOP PIVOT CASTING MACHINED		
60.	830-405C	TE POLY 1/4 PUSH LOCK		
61.	833-534C	FUSE ASSEMBLY		
62.	833-532C	8' EXTENSION HARNESS		
63.	833-533C	11' EXTENSION HARNESS		
64.	990-262R	TUBING 3/8 X .275 BLK NYLON		
65.	830-428C	AD 3/8 TUBE X 3/8 TUBE PTC		
66.	830-422C	UNION Y-TUBE 1/4" PTC		
67.	830-426C	AD 1/4MNPT X 3/8OD TUBE PTC		
68.	811-255C	AD 3/8MNPT 1/4FNPT		
69.	830-434C	AD 1/8MNPT X 3/8 TUBE PTC		
70.	830-420C	BREATHER VENT 1/8" MNPT		
71.	811-316C	PL 1/8MNPT		
72.	804-050C	WASHER LOCK #6 SS		
73.	803-065C	NUT HEX 6-32 SS		
74.	833-535C	COMPRESSOR HARNESS		
75.	468100200S1	DJ DWN PRESSURE I/O MODULE A/S		
76.	803-269C	NUT HEX 10-32 PLT		
77.	801-168C	SCREW THUMB 3/8-16 X 5/8 PLT		
78.	803-001C	NUT HEX 10-24 PLT		
79.	804-274C	WASHER BELLVL .53X1.25X.089		
80.	804-252C	WASHER BELLVL .53X1.25X.078		
81.	802-224C	HHCS 1/4-20X1 1/4 GR5		
82.	404-256D	ROW UNIT MODULE MOUNT		
83.	804-007C	WASHER FLAT 1/4 SAE PLT		
84.	403-715A	ROW PRO MAIN VALVE KIT		
85.	002-102ST	EXTREME AIR FILTER HOUSING	Not shown. Air filter for 831-088C.	

Row-Pro (continued)

(Applies to YP40 only)

This Page Intentionally Left Blank

Frame Mount Coulter

(Applies to YP40 only)

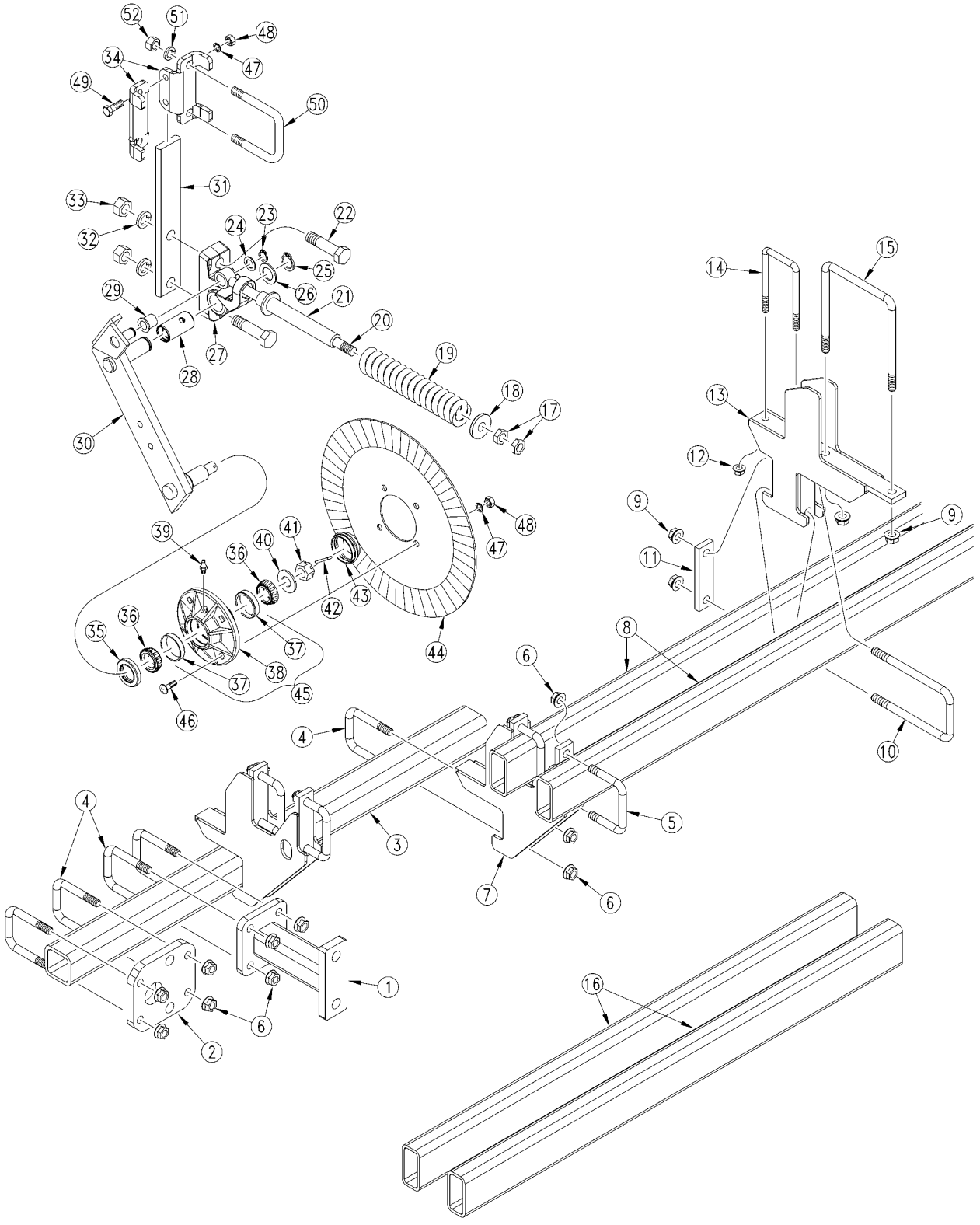

29601

Frame Mount Coulter

(Applies to YP40 only)

Ref.	Part No.	Part Description	Comments	Revision
	dwg29601	Image No.		
1.	204-144H	COULTER SETBACK LONG		
2.	204-346D	MID COULTER PLATE		
3.	204-353D	TUBE SQ. 3.00X.313X48.00		
4.	806-110C	U-BOLT 5/8-11 X 3 1/32 X 4 1/2		
5.	806-019C	U-BOLT 5/8-11 X 4 1/32 X 3 3/8		
6.	803-196C	NUT HEX FLANGE 5/8-11 PLT		
7.	204-143H	DROP TUBE SUPPORT WLDMNT		
8.	204-341D	TUBE 4X2X1/4X132	Wing Frame Mount	
9.	803-263C	NUT HEX FLANGE LOCK 5/8-11 PLT		
10.	806-081C	U-BOLT 5/8-11 X 4 1/32 X 8 1/2		
11.	204-344D	BAR FLAT .50X1.63X6.25 LG		
12.	803-169C	NUT HEX FLG. LOCK 1/2-13 PLT.		
13.	204-142H	BRACKET ATTACHMENT TUBE SUPT		
14.	806-122C	U-BOLT 1/2-13 X 3 1/32 X 6		
15.	806-052C	U-BOLT 5/8-11 X 7 1/32 X 8 1/2		
16.	204-352D	TUBE 4.0X2.0X.25X50.50	Center Frame Mount	
17.	803-048C	NUT HEX JAM 3/4-10 PLT		
18.	149-558D	COULTER SPRING WASHER		
19.	149-559D	SPRING 2.25 O.D. X .5 COIL		
20.	802-718C	EYE BOLT 3/4-10X14 3/4 LG SP		
21.	805-331C	COULTER SPRING GUIDE TUBE		
22.	802-126C	HHCS 7/8-9X3 1/2 GR5		
23.	800-164C	SNAP RING 3/4 EXTERNAL HEAVY		
24.	804-156C	WASHER MACH 1 1/4X3/4X14GA		
25.	800-177C	SNAP RING EXT 1 1/4 HEAVY		
26.	804-165C	WASHER MACH 1 7/8X1 1/4X 14GA		
27.	149-576D	COULTER MOUNT CASTING-MACHINED		
28.	890-389C	BUSHING 1.50ODX1.25IDX2.94		
29.	817-513C	BUSHING 1X3/4X1 1/8 FLG HD		
30.	249-051H	CLTR SWING ARM WLMT		
31.	204-295D	COULTER SPRING BAR 14 3/4 BLK		
32.	804-037C	WASHER LOCK SPRING 7/8 PLT		
33.	803-049C	NUT HEX 7/8-9 PLT		
34.	149-059D	COULTER CLAMP BAR		
35.	816-009C	OIL SEAL DOUBLE LIP		
36.	822-021C	BRG CONE 1.25ID LM-67048		
37.	822-020C	BRG CUP LM-67010		
38.	200-002D	RPBY 200-039V		
39.	800-001C	GREASE ZERK STRAIGHT 1/4-28		
40.	804-055C	WASHER SPINDLE - 7/8		
41.	803-029C	NUT HEX SLOTTED 7/8-14 PLT		
42.	805-017C	PIN COTTER 3/16 X 1 3/4 PLT		
43.	200-001D	HUB GREASE CAP		
44.	820-018C	COULTER BLADE FLUTED		
44.	820-156C	5/8 WAVY TURBO BLADE		
45.	200-039V	COULTER HUB & CUP ASSY		
46.	802-214C	RHSNB 1/2-13X1 1/4 GR5		
47.	804-015C	WASHER LOCK SPRING 1/2 PLT		
48.	803-020C	NUT HEX 1/2-13 PLT		
49.	802-082C	HHCS 1/2-13X1 3/4 GR5		
50.	806-106C	U-BOLT 5/8-11 X 4 1/32 X 4		
51.	804-022C	WASHER LOCK SPRING 5/8 PLT		
52.	803-021C	NUT HEX 5/8-11 PLT		

Stop Pad Assembly

(Applies to YP40 only)

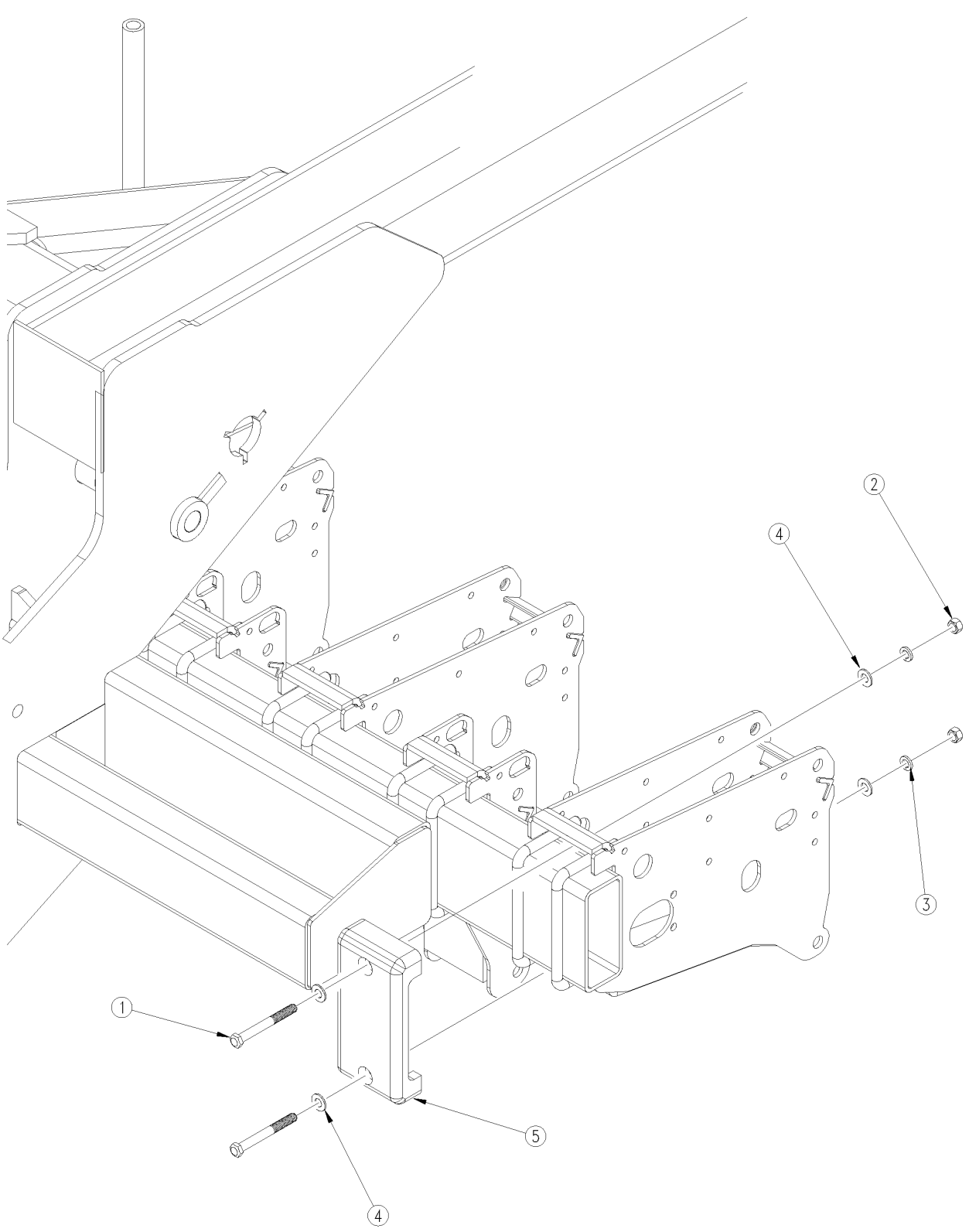

34978

Stop Pad Assembly

(Applies to YP40 only)

Ref.	Part No.	Part Description	Comments	Revision
	dwg34978	Image No.		
1.	802-413C	HHCS 1/2-13X4 1/2 GR5		
2.	803-020C	NUT HEX 1/2-13 PLT		
3.	804-015C	WASHER LOCK SPRING 1/2 PLT		
4.	804-016C	WASHER FLAT 1/2 SAE PLT		
5.	817-877C	RUB BLOCK 7 X 3		

Hub Assembly (815-255C and 204-084S)

(Applies to YP40 only)

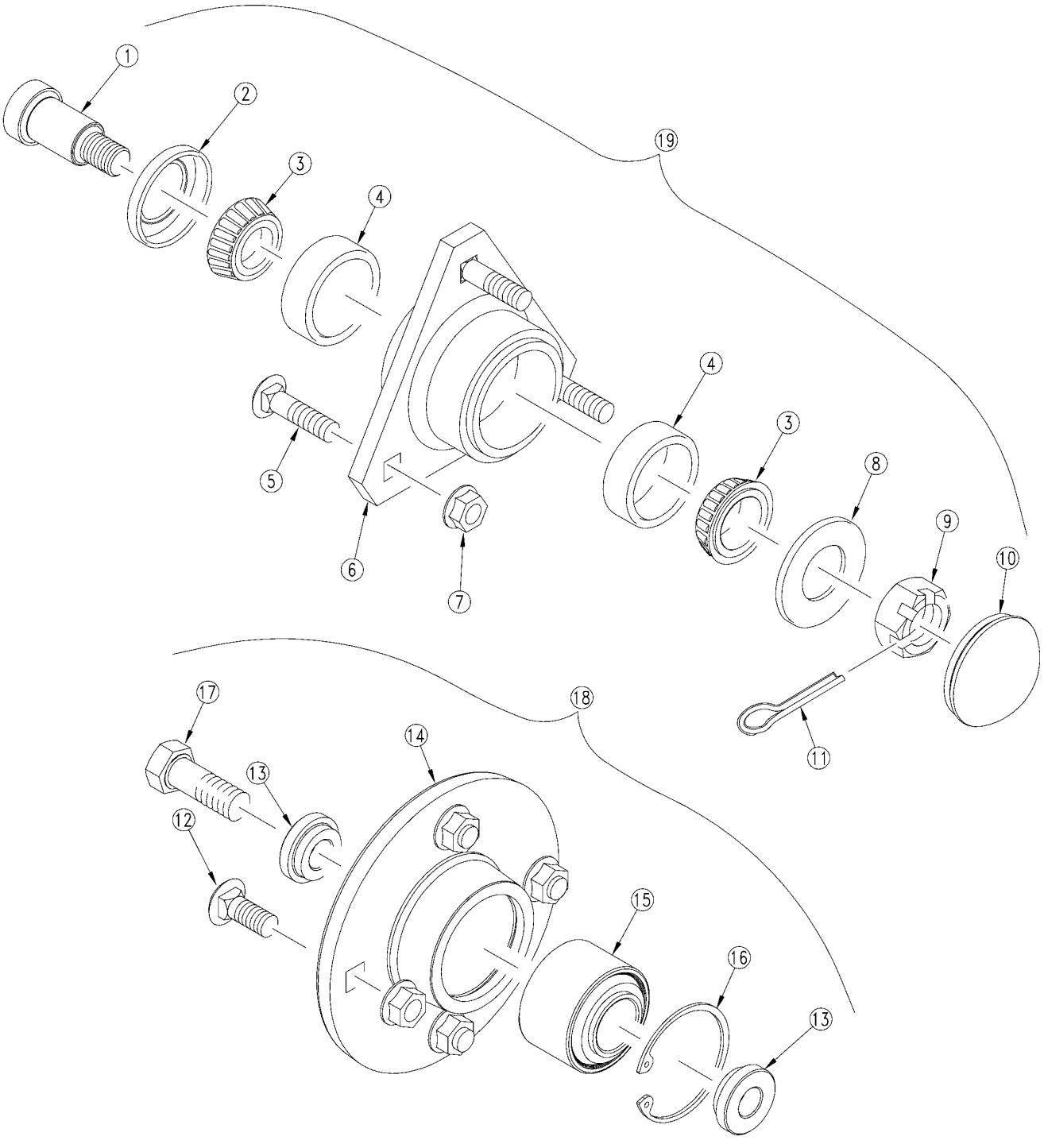

22747

Hub Assembly (815-255C and 204-084S)

(Applies to YP40 only)

Ref.	Part No.	Part Description	Comments	Revision
	dwg22747	Image No.		
1.	802-051C	HHCS 5/8-11X1 1/2 GR5		
2.	CR14971	MARTIN 3 LIP SEAL (JD AA26234)		
3.	822-030C	BEARING CONE L44643		
4.	822-080C	BEARING CUP L44610		
5.	802-030C	RHSNB 7/16-14X1 3/4 GR5		
6.	HU13	MARTIN HA13270 HUB HOUSING		
7.	803-052C	NUT HEX WHIZ 7/16-14 PLT		
8.	804-025C	WASHER FLAT 3/4 SAE PLT		
9.	803-053C	NUT HEX SLOTTED 3/4-16		
10.	HS1328	MARTIN HUB CAP		
11.	805-045C	PIN COTTER 5/32 X 1 1/4 LG		
12.	802-214C	RHSNB 1/2-13X1 1/4 GR5		
13.	204-329D	NARROW HUB BOLT SPACER		
14.	204-328D	NARROW COULTER HUB		
15.	822-215C	BRG 5206KPP3 1.187 IDX2.44 OD		
16.	800-232C	SNAP RING INT 2.44 OD .078W		
17.	802-051C	HHCS 5/8-11X1 1/2 GR5		
18.	204-084S	GP25S NARROW HUB ASM	Includes items 12-17	
19.	815-255C	ROW CLEANER HUB ASM	Includes items 1-11	

Seed Lok

(Applies to YP40 only)

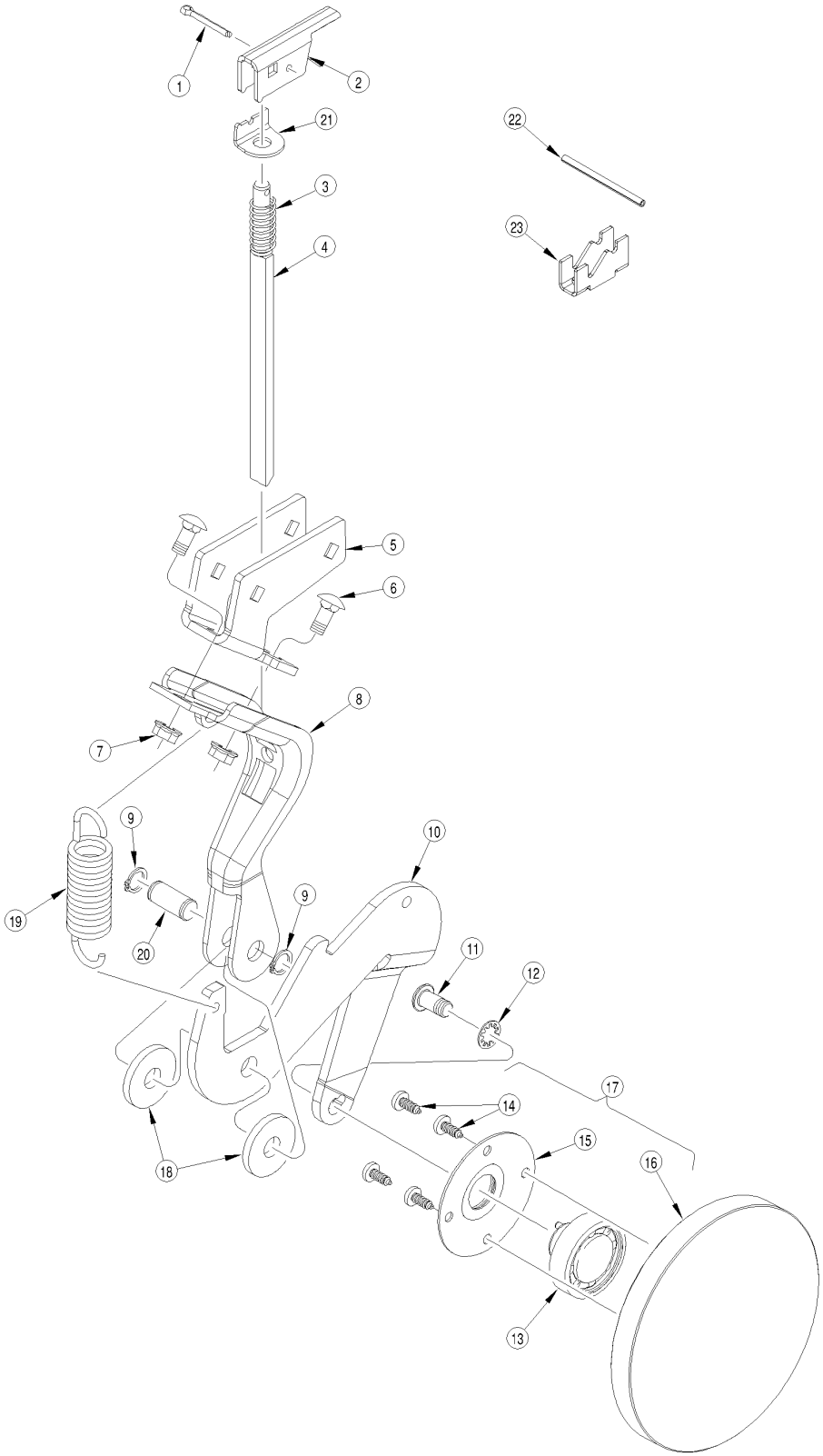

17663

Seed Lok

(Applies to YP40 only)

Ref.	Part No.	Part Description	Comments	Revision
	dwg17663	Image No.		
1.	805-045C	PIN COTTER 5/32 X 1 1/4 LG		
2.	404-213D	LEVER, SEED LOK		
3.	807-106C	SPRING .540 O.D.X 1 1/4 X.054W		
4.	404-088H	LOCK ROD WELD		
5.	404-144D	SEED LOK MOUNT		
6.	802-092C	RHSNB 5/16-18X3/4 GR5		
7.	803-043C	NUT HEX WHIZ 5/16-18 PLT		
8.	206-010D	JD KINZE SEED LOK LOWER MOUNT		
9.	800-166C	SNAP RING 1/2 EXTERNAL HEAVY		
10.	404-061D	SEED LOK WHEEL ARM		
11.	801-078C	SCR HX SKT BUT CP 3/8-16X3/4		
12.	804-078C	WASHER INTERNAL STAR 3/8 PLT.		
13.	122-231A	RPBY 188-008V		
14.	801-084C	SCR PH THD FMG #10X1/2 TP ZP		
15.	816-173C	RETAINER W/BONDED SEAL 4BLT		
16.	817-191C	5/8 X 6 SEED LOK WHEEL		
17.	206-014S	6 SEED LOK ASSEMBLY		
18.	206-012D	WASHER MACH 1.50 X .510 X 10G		
19.	807-125C	SPRING EXT 1 X 4 X .135 WD		
20.	206-011D	SEED LOK PIVOT PIN		
21.	404-212D	LEVER STOP		

Side Depth Wheel Assembly

(Applies to YP40 only)

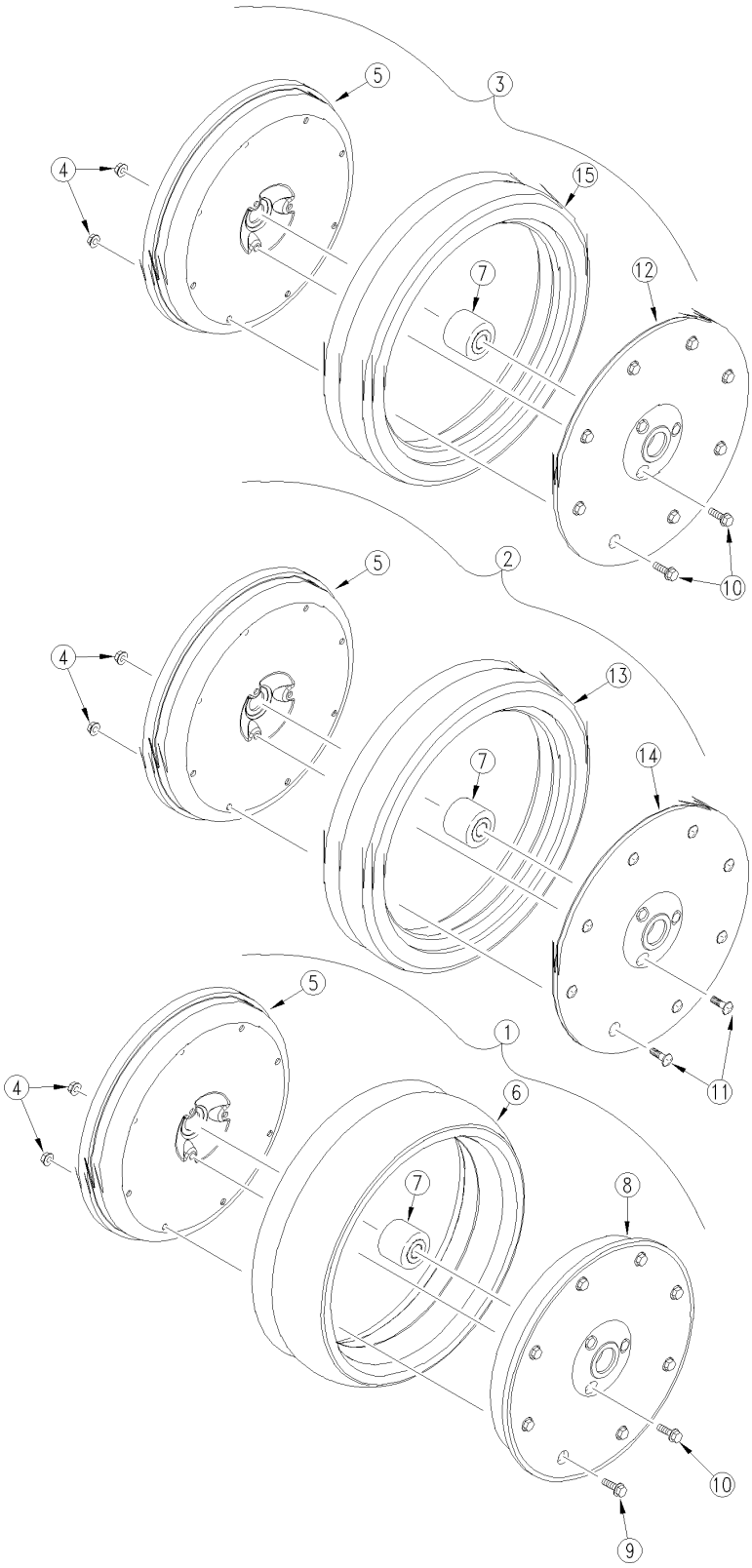

21993

Side Depth Wheel Assembly

(Applies to YP40 only)

Ref.	Part No.	Part Description	Comments	Revision
	dwg21993	Image No.		
1.	814-173C	4 X 16 GAUGE TIRE ASSY-PLASTIC		
2.	814-257C	2.5X16 SIDE DEPTH WHEEL ASSY		
3.	814-260C	3X16 SIDE DEPTH WHEEL ASSY		
4.	803-177C	803-184 FLG TP LK 5/16-18ZNYCR		
5.	814-175C	4 X 16 GAUGE WHEEL RIM		
6.	814-113C	4 1/2 X 16 GAUGE TIRE		
7.	822-170C	BRG .63ID PRESS WHL ASY		
8.	817-331C	4 X 16 GAUGE WHEEL RIM HALF		
9.	802-094C	HFSS 5/16-18X1 3/4 GR5		
10.	802-431C	HFSS 5/16-18X1 GR5 PLT		
11.	802-883C	HSBHCS 5/16-18X5/8" GR5		
12.	817-541C	3X16 NYLON WHEEL HALF-40MM		
13.	814-258C	2.25X16"' TIRE FOR 814-257C		
14.	814-259C	2.25X16"' RIM HALF FOR 814-257C		
15.	814-261C	3X 16"' TIRE FOR 814-260C		

25 Series Side Depth Wheel Scraper Assembly

(Applies to YP40 only)

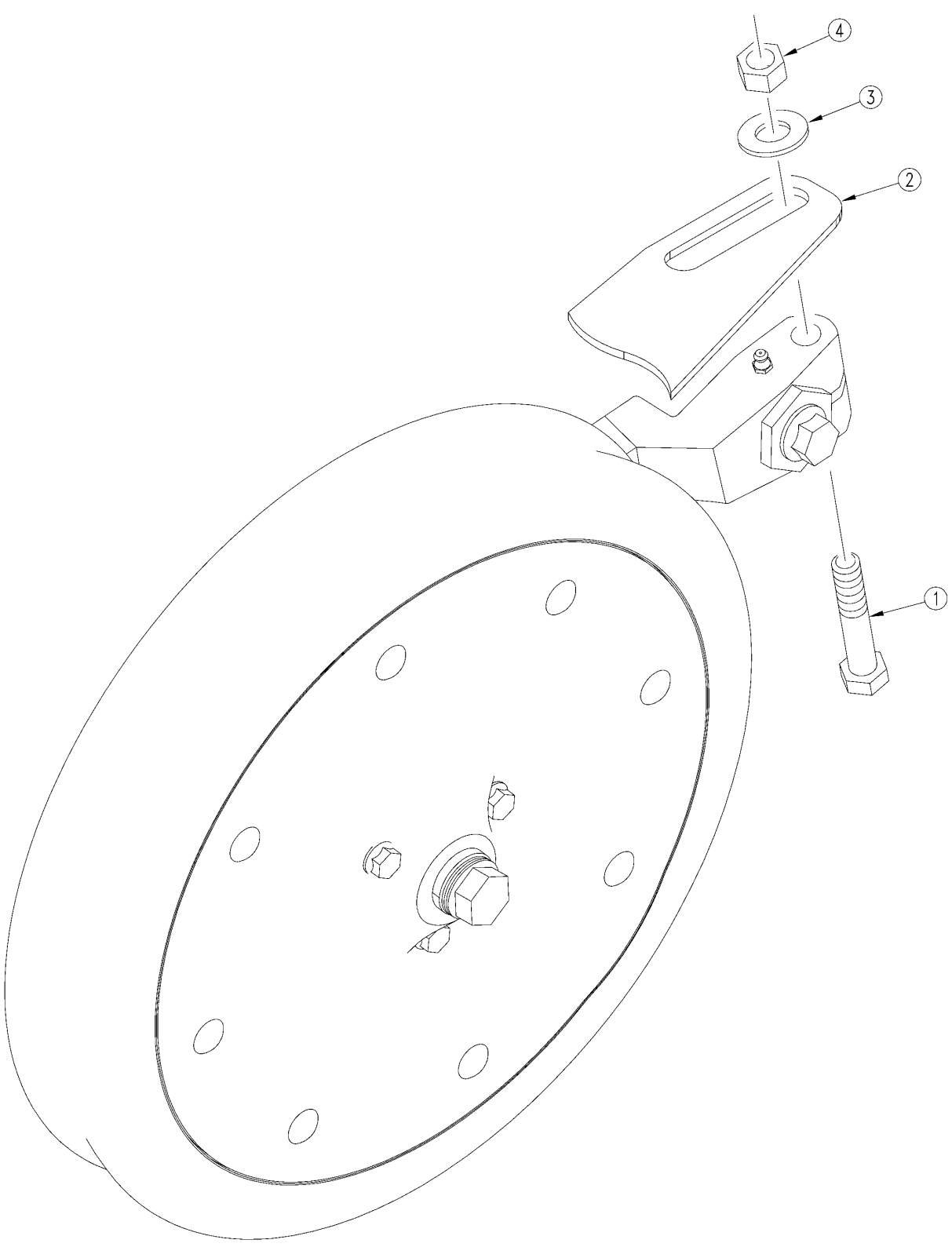

31830

25 Series Side Depth Wheel Scraper Assembly

(Applies to YP40 only)

Ref.	Part No.	Part Description	Comments	Revision
	dwg31830	Image No.		
1.	802-099C	HHCS 1/2-13X3 1/4 GR5		
2.	404-194D	2.5" GAUGE WHEEL SCRAPER	Shown	
2.	404-196D	4" GAUGE WHEEL SCRAPER		
2.	404-195D	3" GAUGE WHEEL SCRAPER		
3.	804-016C	WASHER FLAT 1/2 SAE PLT		
4.	803-020C	NUT HEX 1/2-13 PLT		

Single Arm RC Assembly

(Applies to YP40 only)

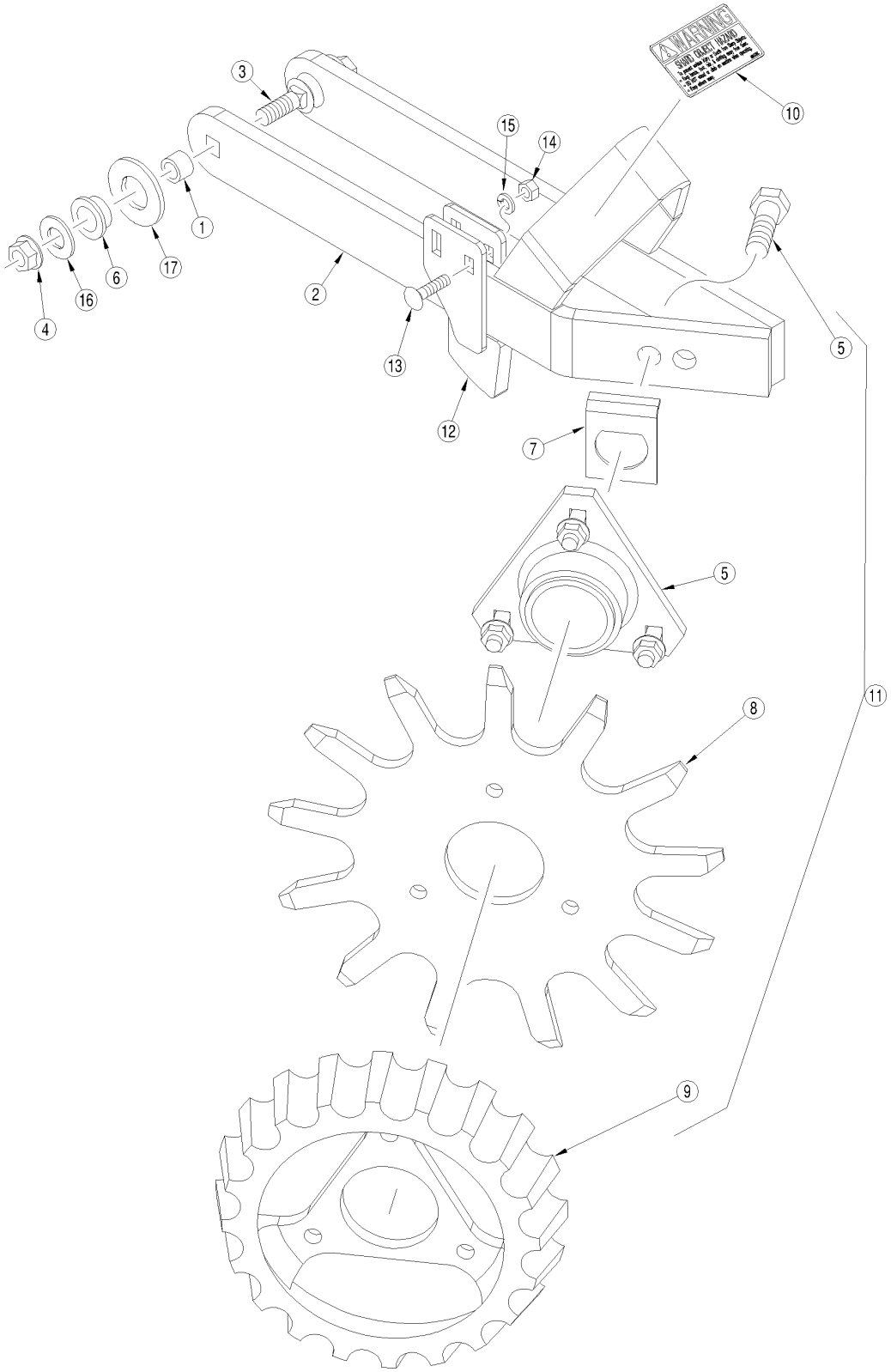

22748

Single Arm RC Assembly

(Applies to YP40 only)

Ref.	Part No.	Part Description	Comments	Revision
	dwg22748	Image No.		
1.	207-067D	UMC RC PIVOT TUBE		
2.	207-095H	SINGLE ARM RC WLD RH	Shown	
2.	207-094H	SINGLE ARM RC WLD LH		
3.	802-331C	RHSNB 1/2-13X1 3/4 GR5		
4.	803-169C	NUT HEX FLG. LOCK 1/2-13 PLT.		
5.	815-255C	ROW CLEANER HUB ASM	Refer to Unit Mount Coulter for breakdown	
6.	817-615C	RC ARM PIVOT BUSHING		
7.	828-057C	RC HUB LOCK		
8.	828-059C	RIGID 13"' ROW CLEANER RH		
8.	828-058C	RIGID 13"' ROW CLEANER LH		
9.	828-060C	DEPTH BEND WHEEL		
10.	818-525C	DECAL SHARP OBJECT WARNING		
11.	207-142V	RIGID ROW CLEANER ASM RH	Contains 5, 8 & 9 only.	
11.	207-143V	RIGID ROW CLEANER ASM LH	Contains 5, 8 & 9 only.	
12.	207-148H	UM ROW CLEAN DOWN STOP WLDM		
13.	802-009C	RHSNB 5/16-18X1 1/4 GR5		
14.	803-008C	NUT HEX 5/16-18 PLT		
15.	804-009C	WASHER LOCK SPRING 5/16 PLT		
16.	804-017C	WASHER FLAT 1/2 USS PLT		
17.	804-029C	WASHER FLAT 1 SAE		

Terra-Tine 15" Wheel

(Applies to YP40 only)

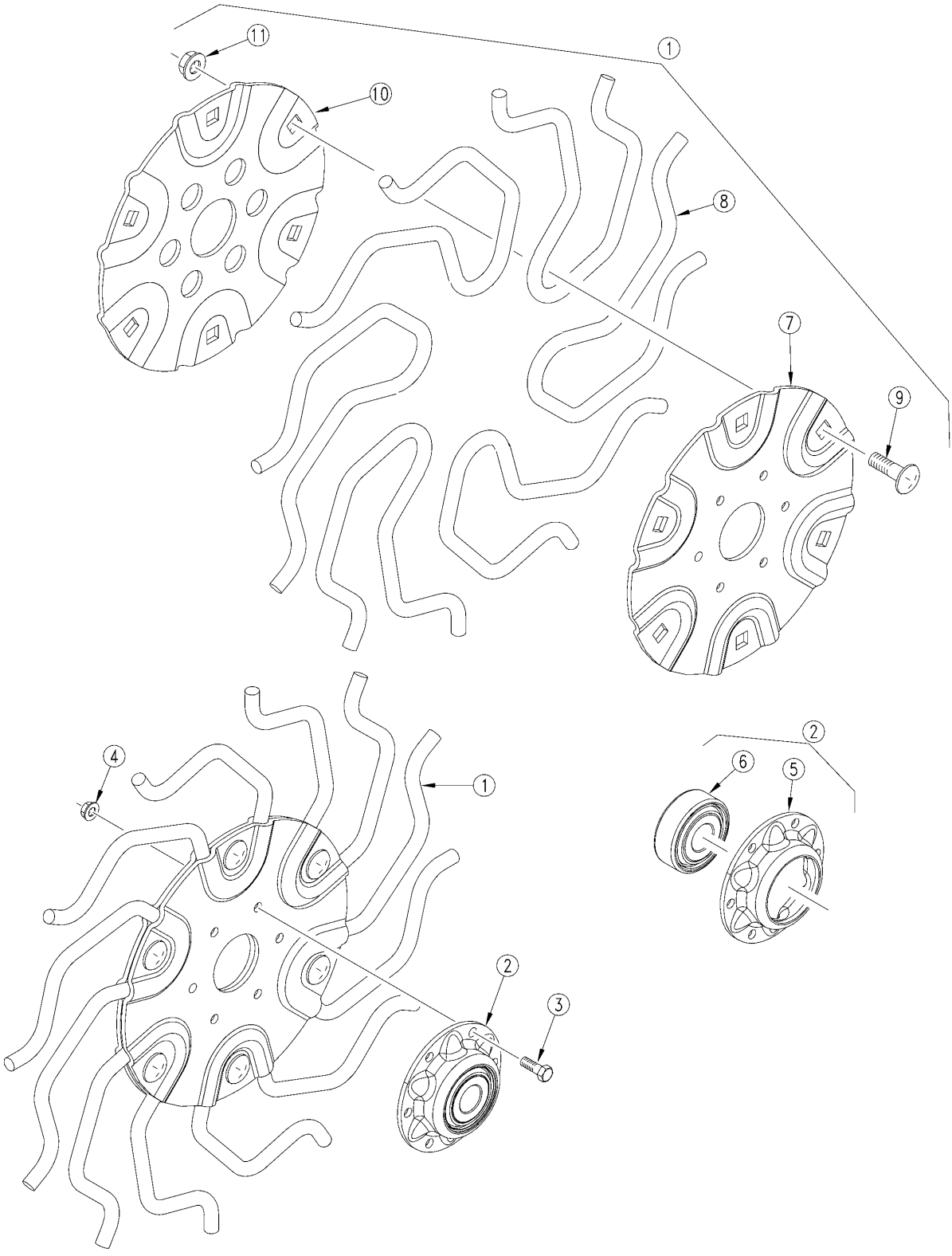

18406

Terra-Tine 15" Wheel

(Applies to YP40 only)

Ref.	Part No.	Part Description	Comments	Revision
	dwg18406	Image No.		
1.	207-033S	TERRA-TINE WHL SUB-ASSY 15 RH		
1.	207-034S	TERRA-TINE WHL SUB-ASSY 15 LH		
2.	207-009S	FRONT FLANGE BEARING ASSEMBLY		
3.	802-078C	HHCS 1/4-20X5/8 GR5		
4.	803-230C	NUT HEX FLANGE 1/4-20 PLT		
5.	890-466C	HSG RIBB FLG 6BOLT PLT		
6.	188-007V	BEARING .760 BORE 205DD		
7.	207-005D	TERRA-TINE FLANGE FRONT		
8.	807-158C	SPRING TERRA-TINE FINGER 15		
9.	802-149C	RHSNB 3/8-16X3/4 GR5		
10.	207-004D	TERRA-TINE FLANGE BACK		
11.	803-068C	NUT HEX FLANGE 3/8-16 PLT		

Terra-Tine 16" Wheel

(Applies to YP40 only)

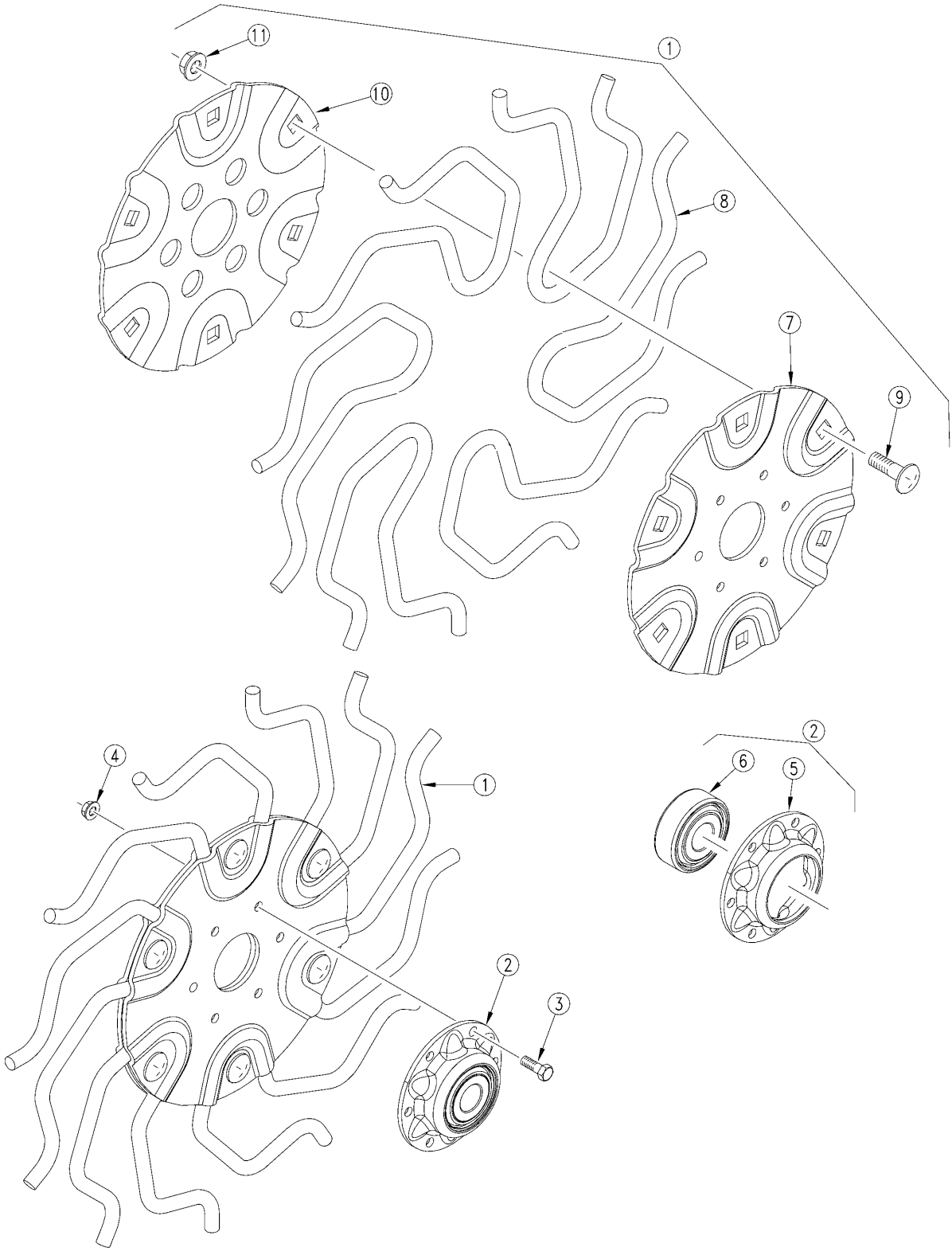

18406

Terra-Tine 16" Wheel

(Applies to YP40 only)

Ref.	Part No.	Part Description	Comments	Revision
	dwg18406	Image No.		
1.	207-014S	TERRA-TINE WHEEL SUB-ASSY RH		
1.	207-015S	TERRA-TINE WHEEL SUB ASSY LH		
2.	207-009S	FRONT FLANGE BEARING ASSEMBLY		
3.	802-078C	HHCS 1/4-20X5/8 GR5		
4.	803-230C	NUT HEX FLANGE 1/4-20 PLT		
5.	890-466C	HSG RIBB FLG 6BOLT PLT		
6.	188-007V	BEARING .760 BORE 205DD		
7.	207-005D	TERRA-TINE FLANGE FRONT		
8.	807-137C	SPRING TERRA-TINE FINGER		
9.	802-149C	RHSNB 3/8-16X3/4 GR5		
10.	207-004D	TERRA-TINE FLANGE BACK		
11.	803-068C	NUT HEX FLANGE 3/8-16 PLT		

1 1/4" x 13" Double Press Wheel

(Applies to YP40 only)

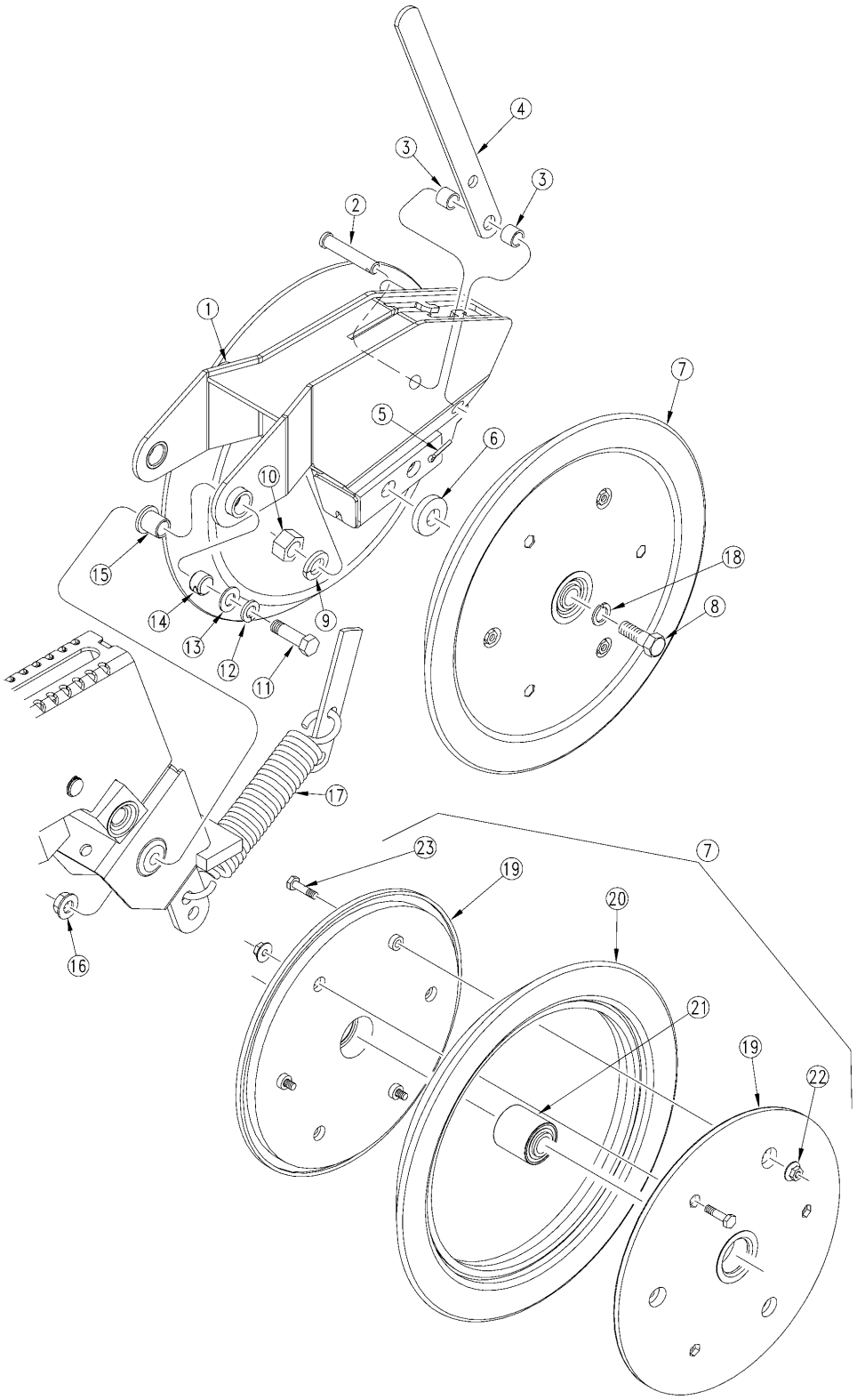

20261

1 1/4" x 13" Double Press Wheel

(Applies to YP40 only)

Ref.	Part No.	Part Description	Comments	Revision
	dwg20261	Image No.		
1.	199-025H	SHORT 1X12 SING OPNR PW MOUNT		
2.	805-304C	PIN CLEVIS 7/16 X 2 25/64 USBL		
3.	199-050D	LONG 1X12 PW HANDLE SPACER TB		
4.	199-011D	PW SPRING HANDLE		
5.	805-067C	PIN COTTER 1/8 X 3/4		
6.	405-031D	1/4 PW SPACER 5/8 DIA		
7.	814-238C	1.25 X 13.5 PRESS WHEEL ASSY		
8.	802-058C	HHCS 5/8-11X2 1/2 GR5		
9.	804-022C	WASHER LOCK SPRING 5/8 PLT		
10.	803-021C	NUT HEX 5/8-11 PLT		
11.	802-029C	HHCS 7/16-14X1 1/2 GR5		
12.	804-014C	WASHER LOCK 7/16 PLT		
13.	804-041C	WASHER FLAT 7/16 SAE PLT		
14.	890-598C	BUSHING 3/4OD X 5/8ID X 1/2 LG		
15.	890-524C	20 SER PW ARM PIVOT SPACER TB		
16.	803-229C	NUT HEX FLANGE LOC 7/16-14 PLT		
17.	807-088C	SPRING EXT 1 5/8 OD X 8.2		
18.	804-022C	WASHER LOCK SPRING 5/8 PLT		
19.	817-330C	1 X 12 PRESS WHEEL RIM HALF		
20.	814-244C	1.25 X 13.5 PRESS WHEEL TIRE		
21.	822-170C	BEARING PRESS WHEEL ASSEMBLY		
22.	803-088C	NUT HEX LOCK 1/4-20 FLG		
23.	802-005C	HHCS 1/4-20X1 GR5		

1" x 10" Double "V" Press Wheel

(Applies to YP40 only)

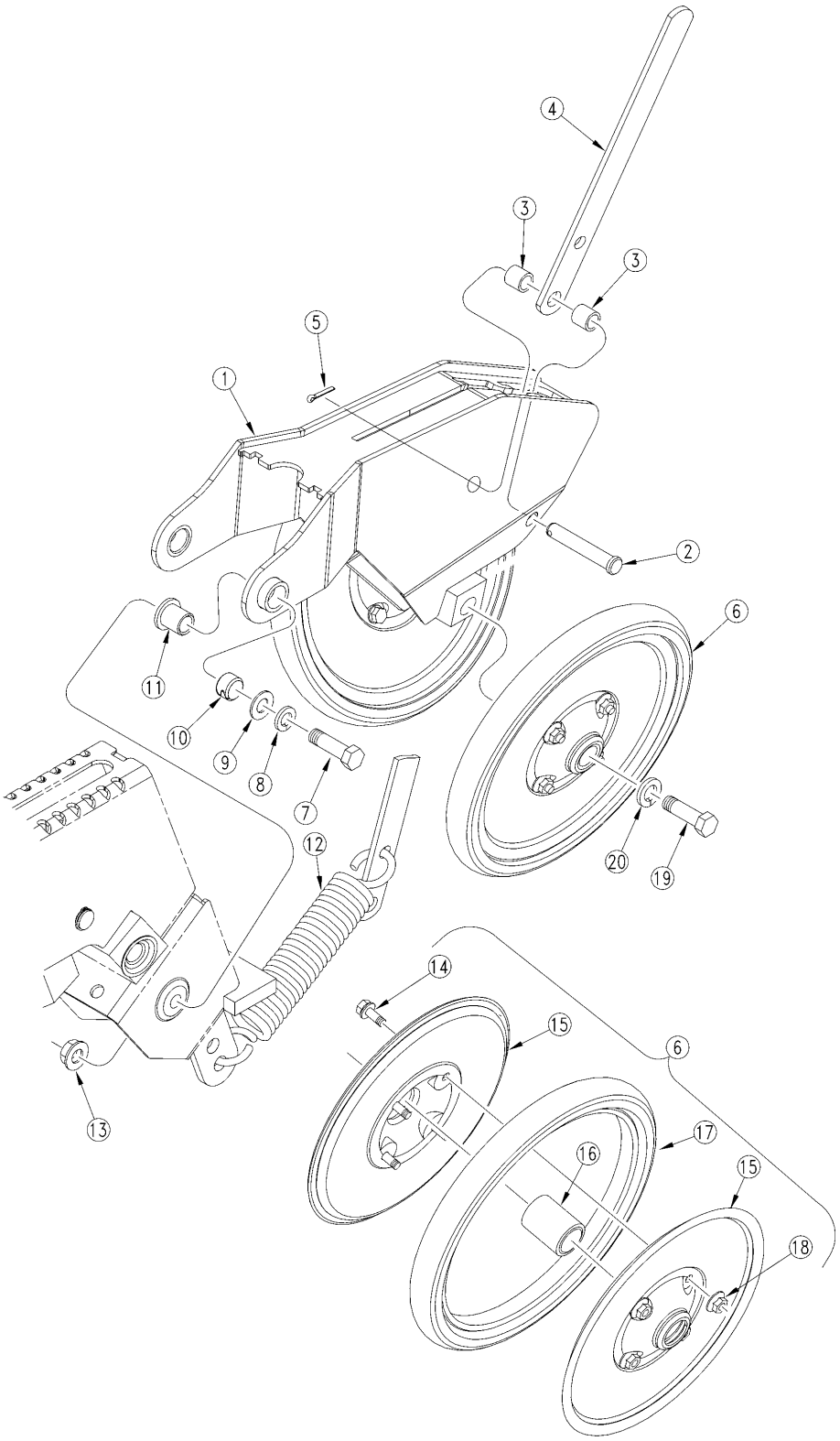

19901

1" x 10" Double "V" Press Wheel

(Applies to YP40 only)

Ref.	Part No.	Part Description	Comments	Revision
	dwg19901	Image No.		
1.	199-027H	1X10 SING PRESS WHEEL MOUNT		
2.	805-166C	PIN CLEVIS 7/16 X 3 PLT		
3.	199-015D	PW HANDLE SPACER TUBE		
4.	199-011D	PW SPRING HANDLE		
5.	805-067C	PIN COTTER 1/8 X 3/4		
6.	814-194C	1X10 PRESS WHEEL ASSEMBLY		
7.	802-029C	HHCS 7/16-14X1 1/2 GR5		
8.	804-014C	WASHER LOCK 7/16 PLT		
9.	804-041C	WASHER FLAT 7/16 SAE PLT		
10.	890-598C	BUSHING 3/4OD X 5/8ID X 1/2 LG		
11.	890-524C	20 SER PW ARM PIVOT SPACER TB		
12.	807-088C	SPRING EXT 1 5/8 OD X 8.2		
13.	803-229C	NUT HEX FLANGE LOC 7/16-14 PLT		
14.	802-196C	HFSS 1/4-20X5/8 GR5		
15.	814-192C	1X10 PRESS WHEEL RIM HALF		
16.	822-170C	BEARING PRESS WHEEL ASSEMBLY		
17.	814-085C	1X10 PRESS WHEEL TIRE		
18.	803-088C	NUT HEX LOCK 1/4-20 FLG		
19.	802-058C	HHCS 5/8-11X2 1/2 GR5		
20.	804-022C	WASHER LOCK SPRING 5/8 PLT		

1" x 12" Double "V" Press Wheel Long

(Applies to YP40 only)

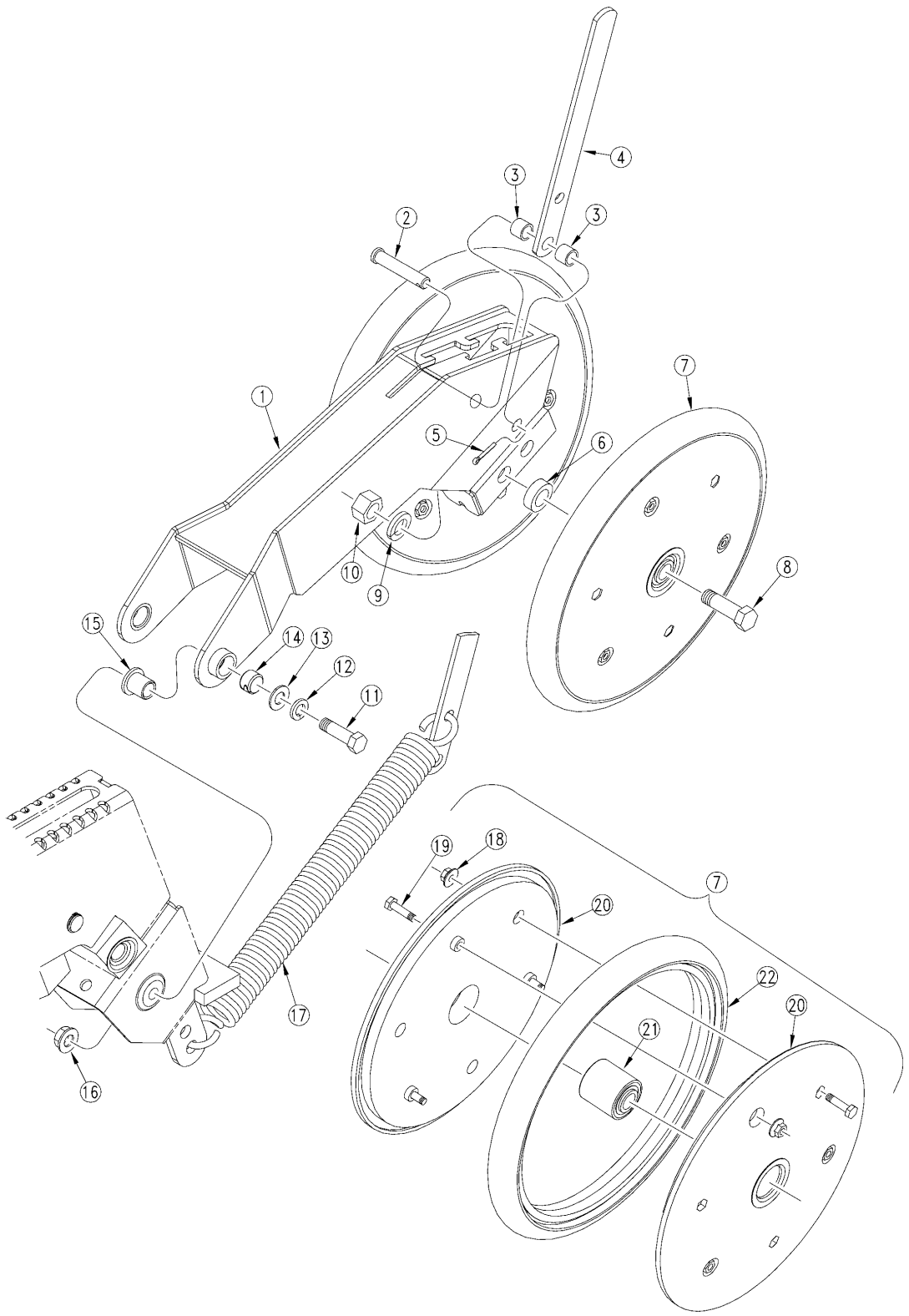

18193

1" x 12" Double "V" Press Wheel Long

(Applies to YP40 only)

Ref.	Part No.	Part Description	Comments	Revision
	dwg18193	Image No.		
1.	199-024H	LONG 1X12 SING OPENER PW MOUNT		
2.	805-295C	PIN CLEVIS 7/16 X 2 9/64 USABL		
3.	199-050D	LONG 1X12 PW HANDLE SPACER TB		
4.	199-011D	PW SPRING HANDLE		
5.	805-067C	PIN COTTER 1/8 X 3/4		
6.	405-031D	1/4 PW SPACER 5/8 DIA		
7.	814-174C	1 X 12 PRESS WHL ASSY-5203BRG		
8.	802-160C	HHCS 5/8-11X3 1/4 GR5		
9.	804-022C	WASHER LOCK SPRING 5/8 PLT		
10.	803-021C	NUT HEX 5/8-11 PLT		
11.	802-029C	HHCS 7/16-14X1 1/2 GR5		
12.	804-014C	WASHER LOCK 7/16 PLT		
13.	804-041C	WASHER FLAT 7/16 SAE PLT		
14.	890-598C	BUSHING 3/4OD X 5/8ID X 1/2 LG		
15.	890-524C	20 SER PW ARM PIVOT SPACER TB		
16.	803-229C	NUT HEX FLANGE LOC 7/16-14 PLT		
17.	807-184C	SPRING EXT 1.5OD X .25 X 11.25		
18.	803-088C	NUT HEX LOCK 1/4-20 FLG		
19.	802-005C	HHCS 1/4-20X1 GR5		
20.	817-330C	1 X 12 PRESS WHEEL RIM HALF		
21.	822-170C	BEARING PRESS WHEEL ASSEMBLY		
22.	814-034C	TIRE RUBBER 1 X 12		

1" x 12" Double "V" Press Wheel Short

(Applies to YP40 only)

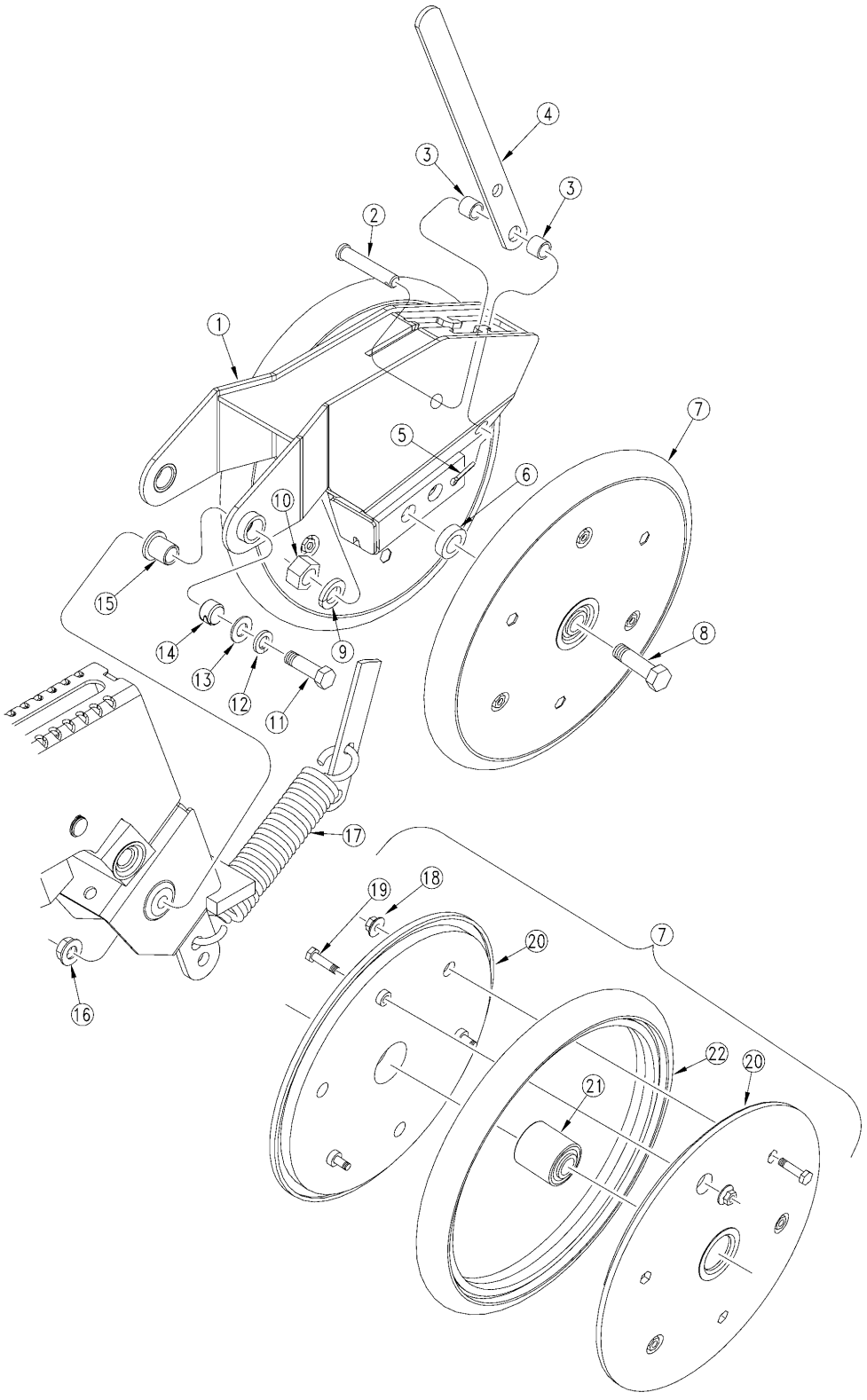

18194

1" x 12" Double "V" Press Wheel Short

(Applies to YP40 only)

Ref.	Part No.	Part Description	Comments	Revision
	dwg18194	Image No.		
1.	199-025H	SHORT 1X12 SING OPNR PW MOUNT		
2.	805-304C	PIN CLEVIS 7/16 X 2 25/64 USBL		
3.	199-050D	LONG 1X12 PW HANDLE SPACER TB		
4.	199-011D	PW SPRING HANDLE		
5.	805-067C	PIN COTTER 1/8 X 3/4		
6.	405-031D	1/4 PW SPACER 5/8 DIA		
7.	814-174C	1 X 12 PRESS WHL ASSY-5203BRG		
8.	802-160C	HHCS 5/8-11X3 1/4 GR5		
9.	804-022C	WASHER LOCK SPRING 5/8 PLT		
10.	803-021C	NUT HEX 5/8-11 PLT		
11.	802-029C	HHCS 7/16-14X1 1/2 GR5		
12.	804-014C	WASHER LOCK 7/16 PLT		
13.	804-041C	WASHER FLAT 7/16 SAE PLT		
14.	890-598C	BUSHING 3/4OD X 5/8ID X 1/2 LG		
15.	890-524C	20 SER PW ARM PIVOT SPACER TB		
16.	803-229C	NUT HEX FLANGE LOC 7/16-14 PLT		
17.	807-088C	SPRING EXT 1 5/8 OD X 8.2		
18.	803-088C	NUT HEX LOCK 1/4-20 FLG		
19.	802-005C	HHCS 1/4-20X1 GR5		
20.	817-330C	1 X 12 PRESS WHEEL RIM HALF		
21.	822-170C	BEARING PRESS WHEEL ASSEMBLY		
22.	814-034C	TIRE RUBBER 1 X 12		

Press Wheel Assembly (S/N B1032A-)

(Applies to YP40 only)

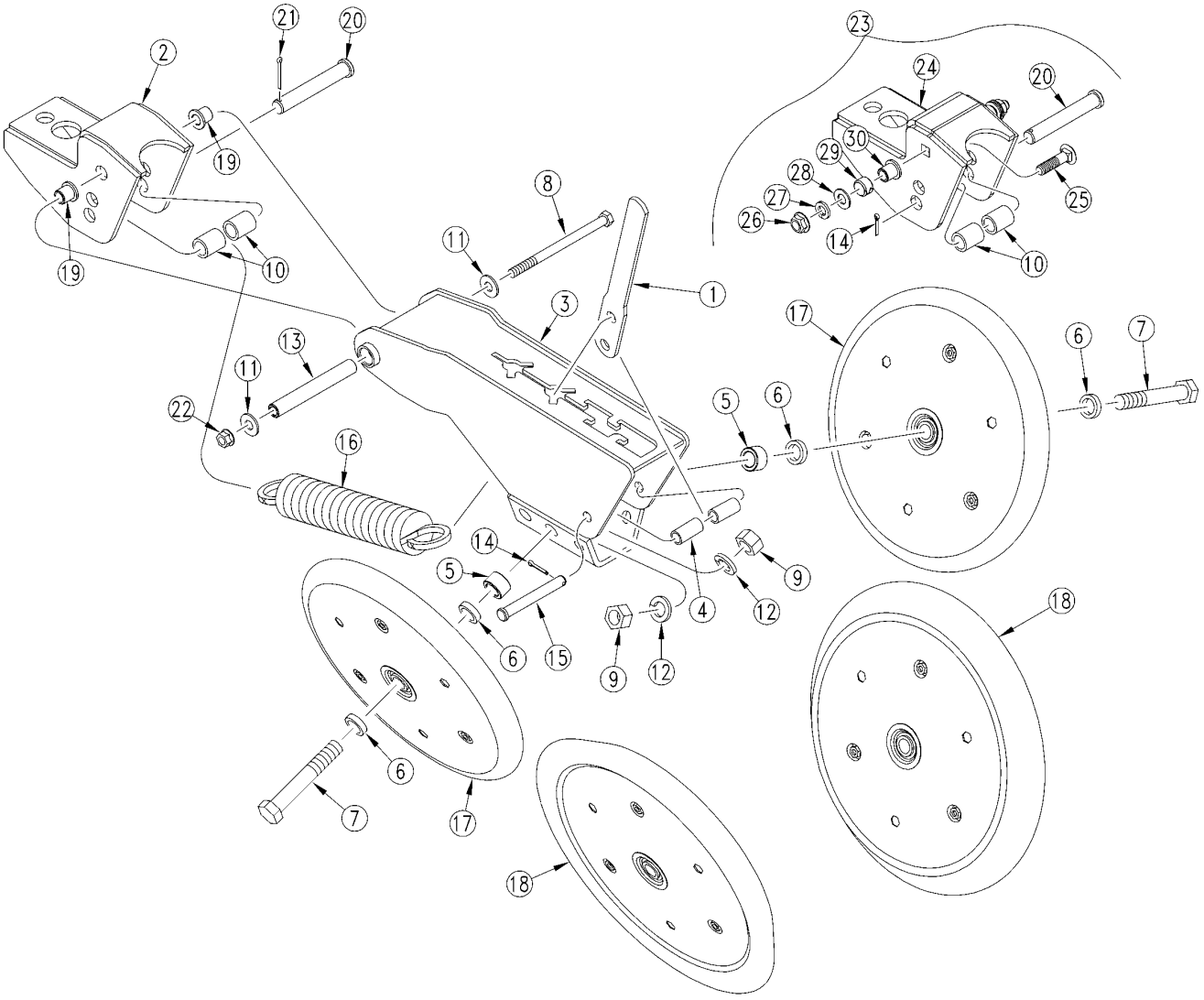

29331

Press Wheel Assembly (S/N B1032A-)

(Applies to YP40 only)

Ref.	Part No.	Part Description	Comments	Revision
	dwg29331	Image No.		
1.	199-107D	PW SPRING HANDLE		
2.	199-109H	RPBY 199-147A		
2.	199-108H	RPBY 199-146A		
3.	199-059H	25P 16 DEG CENTERED PW MOUNT		
4.	199-088D	25P PW HANDLE SPACER TUBE		
5.	404-147D	PARALLEL ARM PIVOT TUBE		
6.	405-031D	1/4 PW SPACER 5/8 DIA		
7.	802-160C	HHCS 5/8-11X3 1/4 GR5		
8.	802-616C	HHCS 3/8-16X5 1/2 GR5		
9.	803-021C	NUT HEX 5/8-11 PLT		
10.	199-113D	SPRING ALIGNMENT BUSHING		
11.	804-011C	WASHER FLAT 3/8 USS PLT		
12.	804-022C	WASHER LOCK SPRING 5/8 PLT		
13.	199-106D	RPBY 199-146A OR 199-147A		
14.	805-067C	PIN COTTER 1/8 X 3/4		
15.	805-183C	PIN CLEVIS 7/16 X 3 17/64 USBL		
16.	807-278C	SPRING 1 5/8 OD X 8.2		
17.	814-174C	1 X 12 PRESS WHL ASSY-5203BRG	Refer to "Press Wheel Breakdown" for breakdown	
18.	814-238C	1.25 X 13.5 PRESS WHEEL ASSY	Refer to "Press Wheel Breakdown" for breakdown	
19.	817-083C	PRESS WHEEL ARM PIVOT BUSHING		
20.	805-417C	PIN CLEVIS 5/8 X 3 49/64 USBL		
21.	805-109C	PIN COTTER 1/8 X 1 1/4 PLT		
22.	803-209C	NUT FLANGE LOCK 3/8-16 PLT		
23.	199-147A	25P MID PW MOUNT KIT		
24.	199-149H	25P MID PW MOUNT UPDATE		
25.	802-030C	RHSNB 7/16-14X1 3/4 GR5		
26.	803-229C	NUT HEX FLANGE LOC 7/16-14 PLT		
27.	804-014C	WASHER LOCK 7/16 PLT		
28.	804-041C	WASHER FLAT 7/16 SAE PLT		
29.	890-598C	BUSHING 3/4OD X 5/8ID X 1/2 LG		
30.	890-524C	20 SER PW ARM PIVOT SPACER TB		

Press Wheel Assembly (S/N B1033A - B1074A)

(Applies to YP40 only)

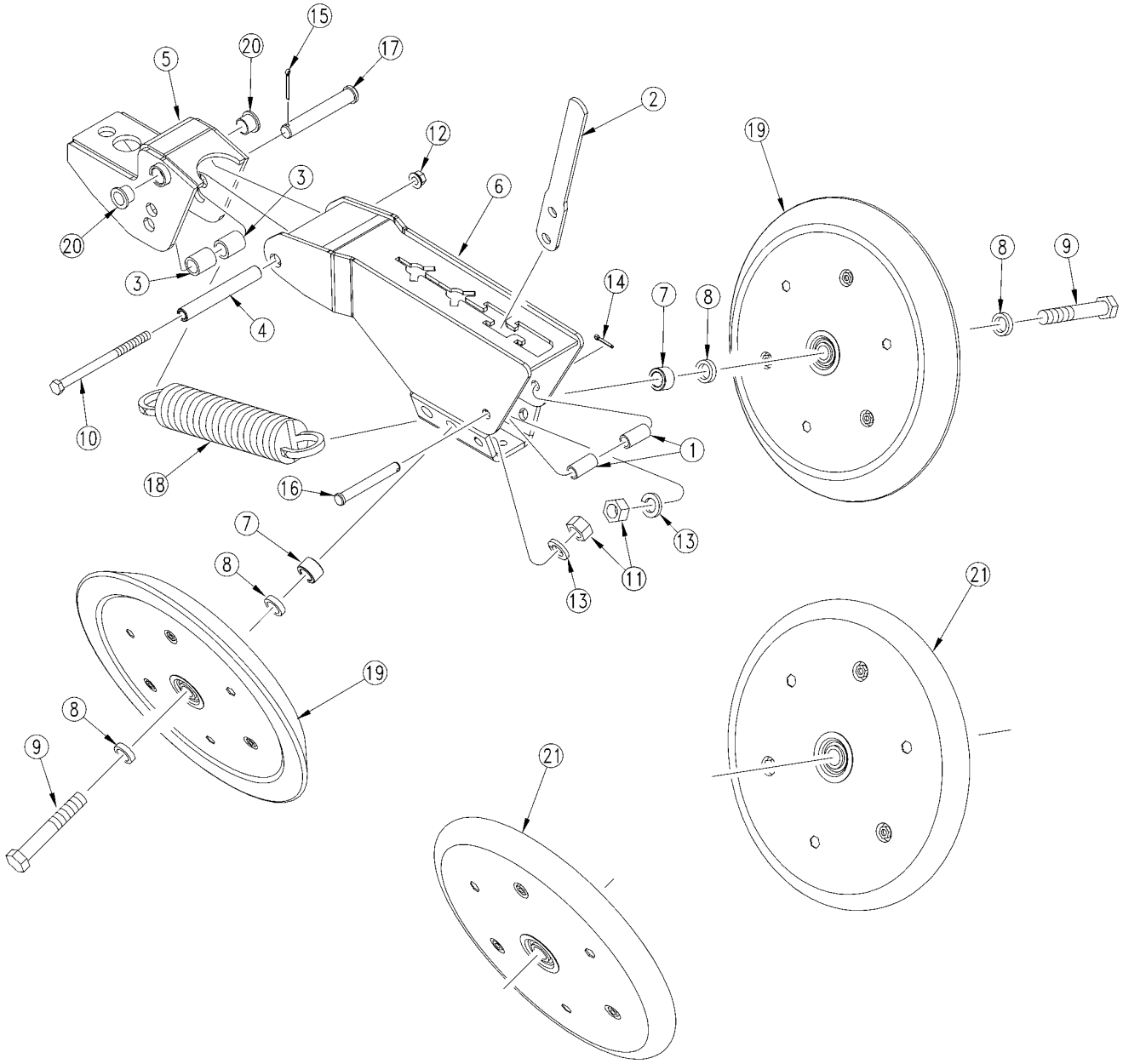

31518

Press Wheel Assembly (S/N B1033A - B1074A)

(Applies to YP40 only)

Ref.	Part No.	Part Description	Comments	Revision
	dwg31518	Image No.		
1.	199-088D	25P PW HANDLE SPACER TUBE		
2.	199-107D	PW SPRING HANDLE		
3.	199-113D	SPRING ALIGNMENT BUSHING		
4.	199-114D	PRESS WHEEL PVT MNT TUBE		
5.	199-140H	LONG PQ MOUNT		
5.	199-141H	25P MID PW MOUNT	Shown	
6.	199-145H	25P 20 DEG CENTERED PW MOUNT	Shown. Used with 20 Deg Press Wheel	
6.	199-144H	25P 16 DEG CENTERED PW MOUNT	Used with 16 Deg Press Wheel	
7.	404-147D	PARALLEL ARM PIVOT TUBE	Only used with 20 Deg Press Wheel	
8.	405-031D	1/4 PW SPACER 5/8 DIA		
9.	802-060C	HHCS 5/8-11X4 GR5	Shown. Used with 20 Deg Press Wheel	
9.	802-160C	HHCS 5/8-11X3 1/4 GR5	Used with 16 Deg Press Wheel	
10.	802-413C	HHCS 1/2-13X4 1/2 GR5		
11.	803-021C	NUT HEX 5/8-11 PLT		
12.	803-169C	NUT HEX FLG LOCK 1/2-13 PLT		
13.	804-022C	WASHER LOCK SPRING 5/8 PLT		
14.	805-067C	PIN COTTER 1/8 X 3/4		
15.	805-109C	PIN COTTER 1/8 X 1 1/4 PLT		
16.	805-183C	PIN CLEVIS 7/16 X 3 17/64 USBL		
17.	805-432C	PIN CLEVIS 5/8 X 3 1/4		
18.	807-278C	SPRING 1.8 OC X 11 LG		
19.	814-238C	1.25 X 13.5 PRESS WHEEL ASSY	Refer to Press Wheel Breakdown for breakdown	
20.	817-084C	PARALLEL ARM PIVOT BUSHING		
21.	814-174C	1 X 12 PRESS WHL ASSY-5203BRG	Refer to Press Wheel Breakdown for breakdown	

12-12D Cast Press Wheels (S/N B1075A+)

(Applies to YP40 only)

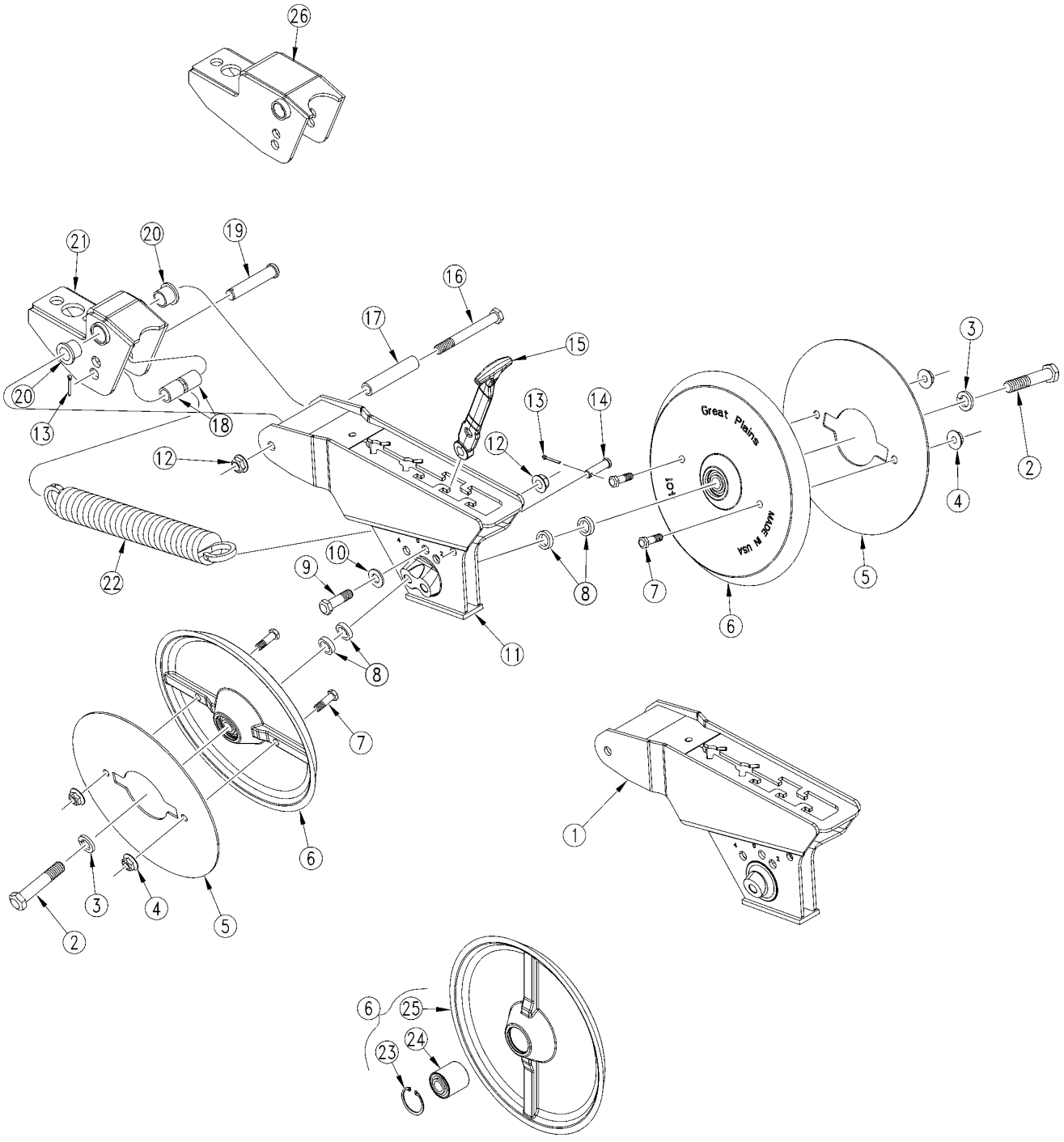

34488

12-12D Cast Press Wheels (S/N B1075A+)

(Applies to YP40 only)

Ref.	Part No.	Part Description	Comments	Revision
	dwg34488	Image No.		
1.	199-152H	25 SER 12 DEG ADJ PW ARM WLDMT		
2.	802-160C	HHCS 5/8-11X3 1/4 GR5		
3.	804-022C	WASHER LOCK SPRING 5/8 PLT		
4.	803-171C	MAC-LOK 3/8-16 SUPER FLANGE	(ONLY) used with Staggered Press Wheel Weldment	
5.	199-135D	CAST PRESS WHEEL COVER DISK	(ONLY) used with Staggered Press Wheel Weldment	
6.	199-151S	CAST WEDGE PW ASY 40 DEG	Includes items: 23-25	
7.	802-079C	HHCS 3/8-16X1 1/4 GR5	(ONLY) used with Staggered Press Wheel Weldment	
8.	405-031D	1/4 PW SPACER 5/8 DIA		
9.	802-082C	HHCS 1/2-13X1 3/4 GR5		
10.	804-094C	WASHER FLAT 1/2 HARD ASTMF436		
11.	199-153H	25 SER 12 DEG STAG PW ARM WLD		
12.	803-169C	NUT HEX FLG LOCK 1/2-13 PLT		
13.	805-363C	PIN COTTER 1/8 X 1		
14.	805-436C	PIN CLEVIS 7/16 X 1 1/2		
15.	812-398C	PRESS WHEEL SPRING ADJ HANDLE		
16.	802-413C	HHCS 1/2-13X4 1/2 GR5		
17.	199-114D	PRESS WHEEL PVT MNT TUBE		
18.	199-113D	SPRING ALIGNMENT BUSHING		
19.	805-432C	PIN CLEVIS 5/8 X 3 1/4		
20.	817-084C	PARALLEL ARM PIVOT BUSHING		
21.	199-141H	25P MID PW MOUNT		
22.	807-278C	SPRING 1.8 OC X 11 LG		
23.	800-054C	SNAP RING INT 40 MM		
24.	822-170C	BRG .63ID PRESS WHL ASY		
25.	199-128D	CAST WEDGE PW MACHINED 40 DEG		
26.	199-140H	LONG PW MOUNT		

Press Wheel Assembly 1X12 & 1.25X13.5 (S/N B1075A+)

(Applies to YP40 only)

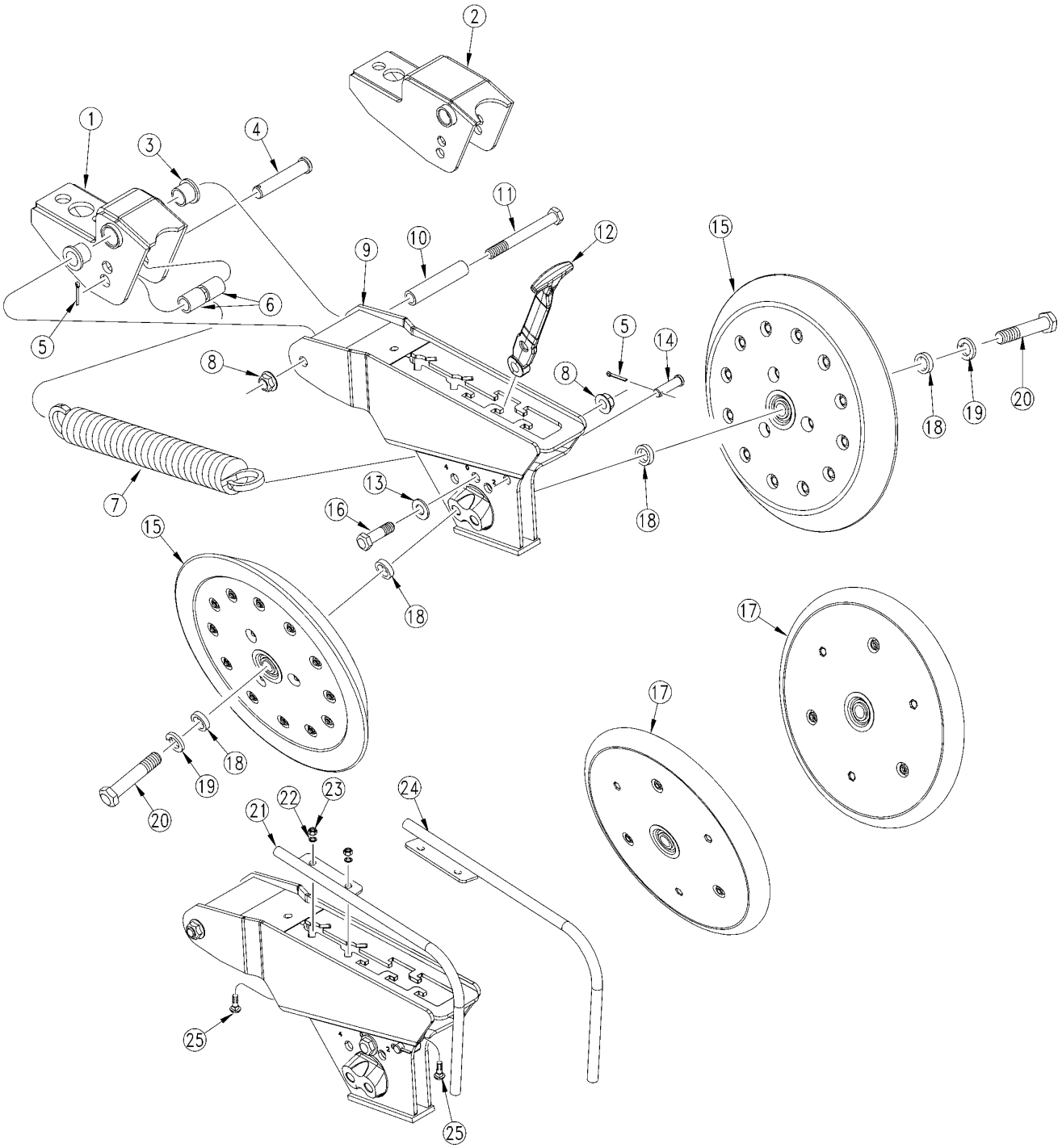

34565

Press Wheel Assembly 1X12 & 1.25X13.5 (S/N B1075A+)

(Applies to YP40 only)

Ref.	Part No.	Part Description	Comments	Revision
	dwg34565	Image No.		
1.	199-141H	25P MID PW MOUNT		
2.	199-140H	LONG PW MOUNT		
3.	817-084C	PARALLEL ARM PIVOT BUSHING		
4.	805-432C	PIN CLEVIS 5/8 X 3 1/4		
5.	805-363C	PIN COTTER 1/8 X 1		
6.	199-113D	SPRING ALIGNMENT BUSHING		
7.	807-278C	SPRING 1.8 OC X 11 LG		
8.	803-169C	NUT HEX FLG LOCK 1/2-13 PLT		
9.	199-153H	25 SER 12 DEG STAG PW ARM WLD		
10.	199-114D	PRESS WHEEL PVT MNT TUBE		
11.	802-413C	HHCS 1/2-13X4 1/2 GR5		
12.	812-398C	PRESS WHEEL SPRING ADJ HANDLE		
13.	804-094C	WASHER FLAT 1/2 HARD ASTMF436		
14.	805-436C	PIN CLEVIS 7/16 X 1 1/2		
15.	814-400C	1.25 X 13.5 WEDGE HD PW ASSY		
16.	802-082C	HHCS 1/2-13X1 3/4 GR5		
17.	814-174C	1 X 12 PRESS WHL ASSY-5203BRG		
18.	405-031D	1/4 PW SPACER 5/8 DIA		
19.	804-022C	WASHER LOCK SPRING 5/8 PLT		
20.	802-160C	HHCS 5/8-11X3 1/4 GR5		
21.	204-133H	LH DRIBBLER TUBE		
22.	804-009C	WASHER LOCK SPRING 5/16 PLT		
23.	803-008C	NUT HEX 5/16-18 PLT		
24.	204-134H	RH DRIBBLER TUBE		
25.	802-092C	RHSNB 5/16-18X3/4 GR5		

HD 1" x 12" Double "V" Press Wheel

(Applies to YP40 only)

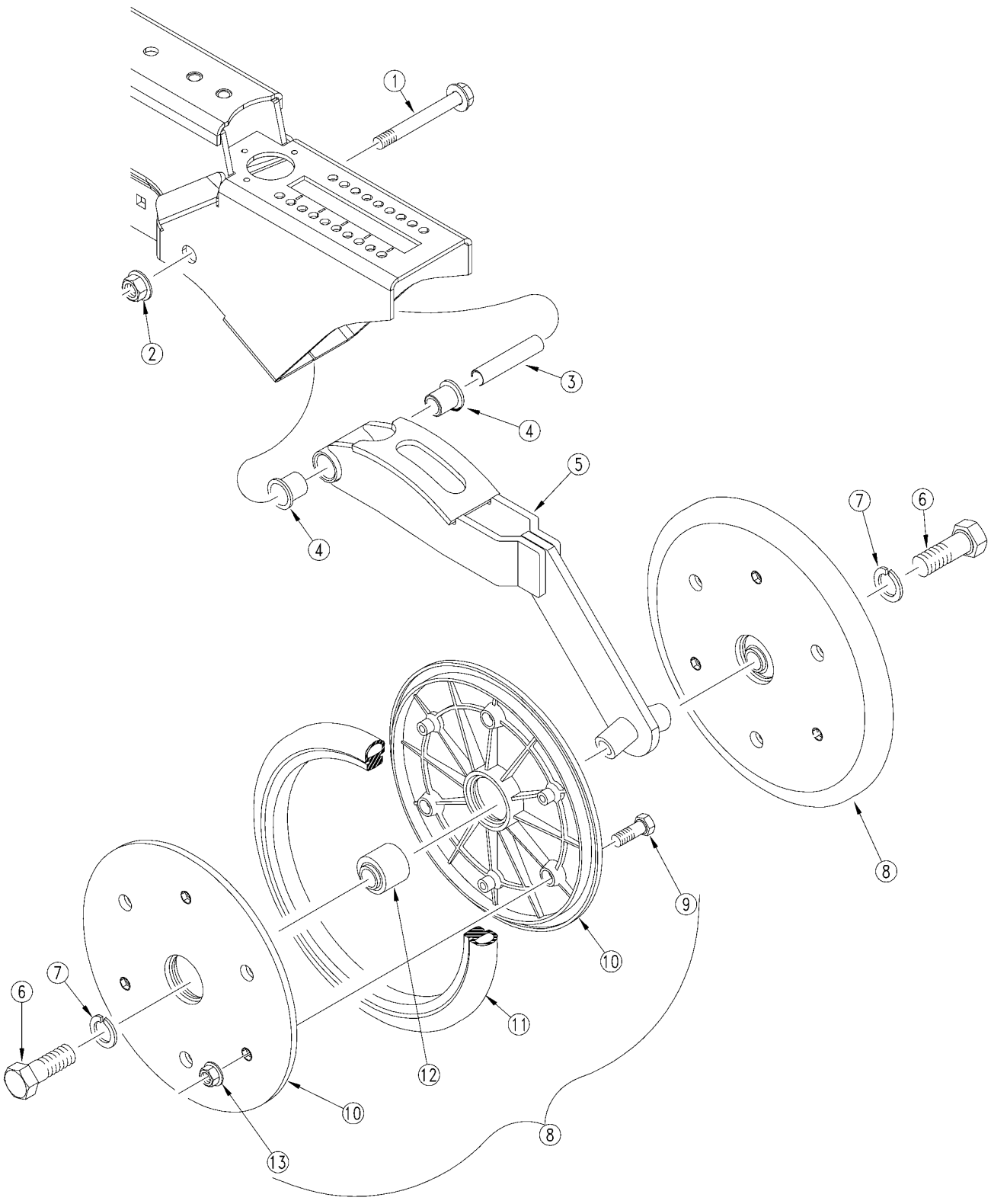

24430

HD 1" x 12" Double "V" Press Wheel

(Applies to YP40 only)

Ref.	Part No.	Part Description	Comments	Revision
	dwg24430	Image No.		
1.	802-421C	HFS 1/2-13X3 3/4 GR5 SPTHD		
2.	803-169C	NUT HEX FLG. LOCK 1/2-13 PLT.		
3.	198-137D	PRESS WHEEL PIVOT TUBE		
4.	817-084C	PARALLEL ARM PIVOT BUSHING		
5.	199-043H	NG 1X12 PRESS WHEEL ARM		
6.	802-058C	HHCS 5/8-11X2 1/2 GR5		
7.	804-022C	WASHER LOCK SPRING 5/8 PLT		
8.	814-174C	1 X 12 PRESS WHL ASSY-5203BRG	Includes items 9 through 13.	
9.	802-005C	HHCS 1/4-20X1 GR5		
10.	817-330C	1 X 12 PRESS WHEEL RIM HALF		
11.	814-034C	TIRE RUBBER 1 X 12		
12.	822-170C	BRG .63ID PRESS WHL ASY		
13.	803-088C	NUT HEX LOCK 1/4-20 FLG		

HD 2" x 13" Single Press Wheel

(Applies to YP40 only)

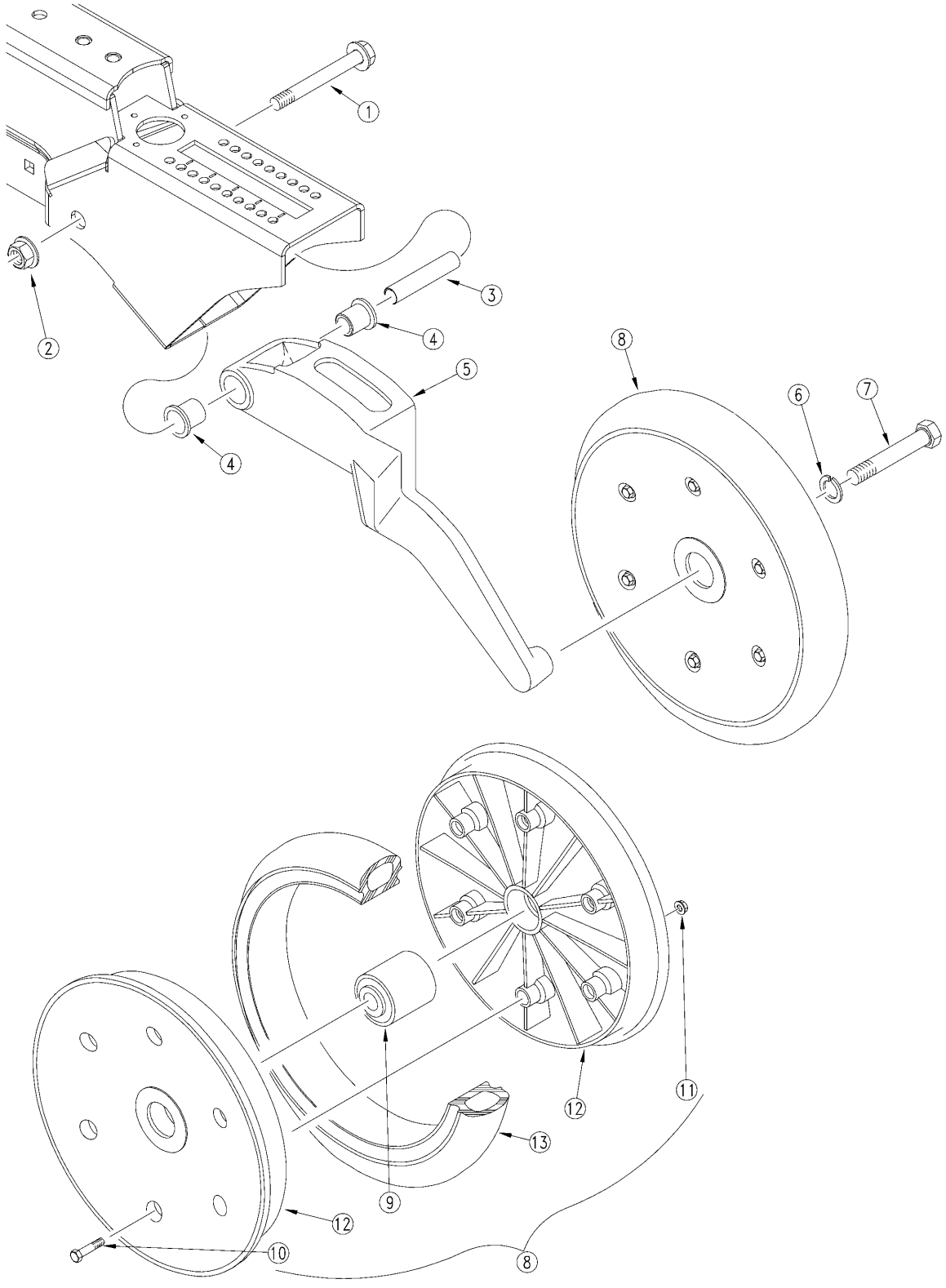

24431

HD 2" x 13" Single Press Wheel

(Applies to YP40 only)

Ref.	Part No.	Part Description	Comments	Revision
	dwg24431	Image No.		
1.	802-421C	HFS 1/2-13X3 3/4 GR5 SPTHD		
2.	803-169C	NUT HEX FLG. LOCK 1/2-13 PLT.		
3.	198-137D	PRESS WHEEL PIVOT TUBE		
4.	817-084C	PARALLEL ARM PIVOT BUSHING		
5.	202-189D	NG UNIVERSAL PRESS WHEEL ARM		
6.	804-022C	WASHER LOCK SPRING 5/8 PLT		
7.	802-058C	HHCS 5/8-11X2 1/2 GR5		
8.	814-157C	2 X 13 PRESS WHEEL ASSEMBLY	Includes items 9 through 13.	
9.	822-170C	BRG .63ID PRESS WHL ASY		
10.	802-617C	HHFS 1/4-20 X 1 1/2 GR 5		
11.	803-088C	NUT HEX LOCK 1/4-20 FLG		
12.	817-296C	2 X 13 PRESS WHEEL RIM HALF		
13.	814-159C	2 X 13 PRESS WHEEL TIRE		

HD 3" x 13" Single Press Wheel

(Applies to YP40 only)

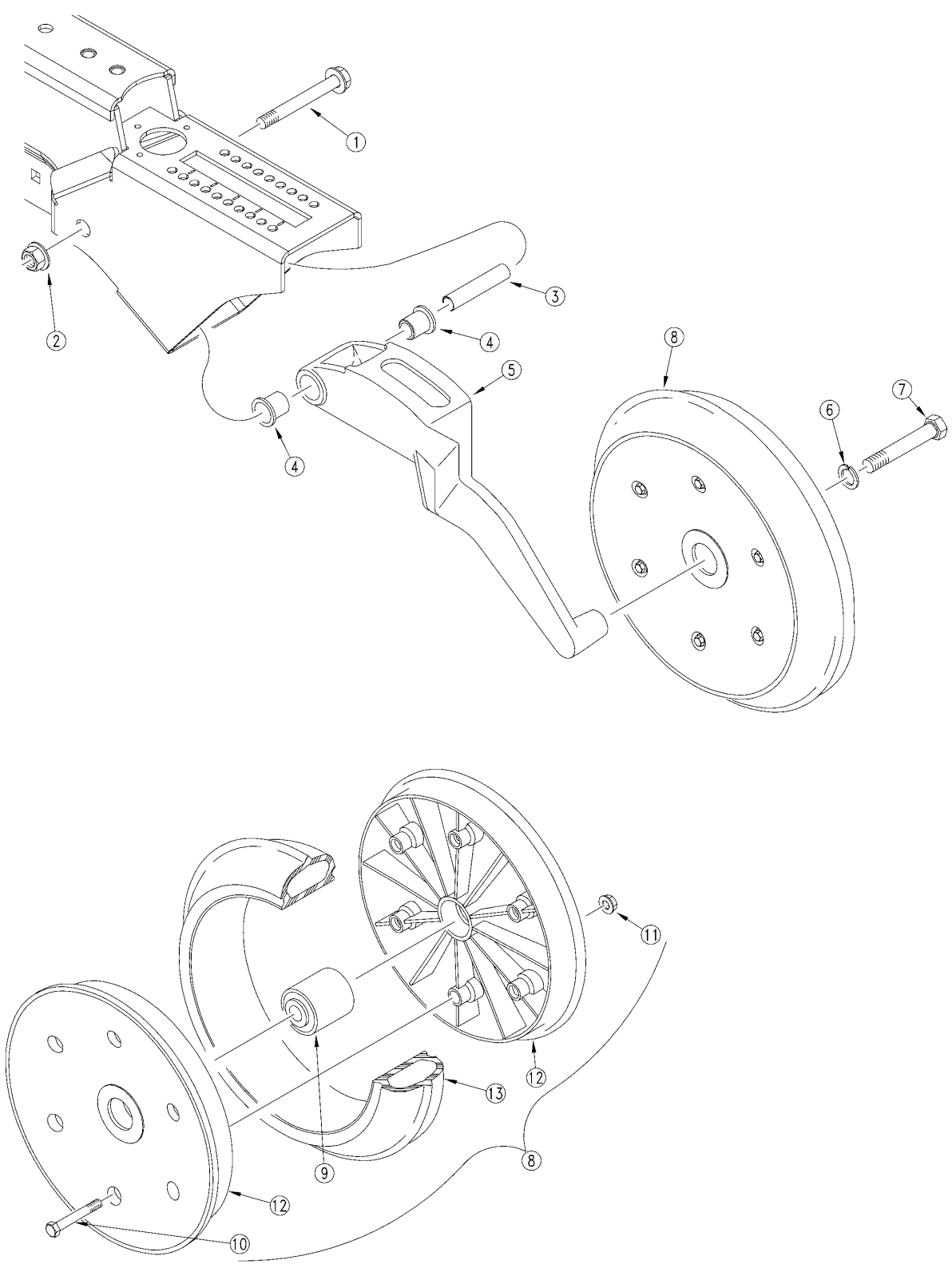

24432

HD 3" x 13" Single Press Wheel

(Applies to YP40 only)

Ref.	Part No.	Part Description	Comments	Revision
	dwg24432	Image No.		
1.	802-421C	HFS 1/2-13X3 3/4 GR5 SPTHD		
2.	803-169C	NUT HEX FLG. LOCK 1/2-13 PLT.		
3.	198-137D	PRESS WHEEL PIVOT TUBE		
4.	817-084C	PARALLEL ARM PIVOT BUSHING		
5.	202-189D	NG UNIVERSAL PRESS WHEEL ARM		
6.	804-022C	WASHER LOCK SPRING 5/8 PLT		
7.	802-058C	HHCS 5/8-11X2 1/2 GR5		
8.	814-158C	3 X 13 PRESS WHEEL ASSEMBLY	Includes items 9 through 13.	
9.	822-170C	BRG .63ID PRESS WHL ASY		
10.	802-618C	HHFS 1/4-20 X 2 GR 5		
11.	803-088C	NUT HEX LOCK 1/4-20 FLG		
12.	817-297C	3 X 13 PRESS WHEEL RIM HALF		
13.	814-160C	3 X 13 PRESS WHEEL TIRE		

HD 1 1/4" x 13 1/2" Press Wheel

(Applies to YP40 only)

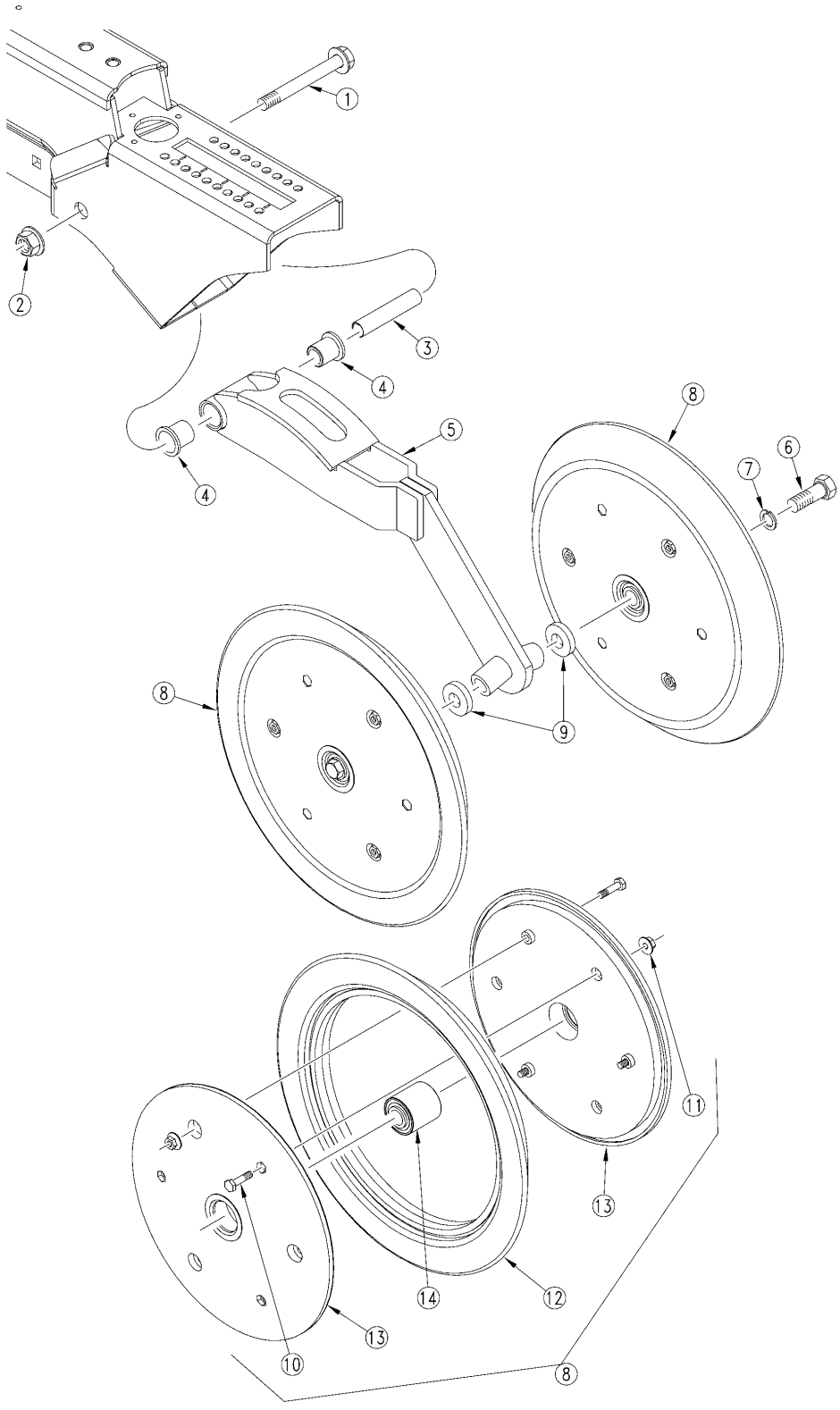

27028

HD 1 1/4" x 13 1/2" Press Wheel

(Applies to YP40 only)

Ref.	Part No.	Part Description	Comments	Revision
	dwg27028	Image No.		
1.	802-421C	HFS 1/2-13X3 3/4 GR5 SPTHD		
2.	803-169C	NUT HEX FLG. LOCK 1/2-13 PLT.		
3.	198-137D	PRESS WHEEL PIVOT TUBE		
4.	817-084C	PARALLEL ARM PIVOT BUSHING		
5.	199-088H	10HD DBL PW ARM WELDMENT RH		
5.	199-089H	10HD DBL PW ARM WELDMENT LH		
6.	802-059C	HHCS 5/8-11X3 GR5		
7.	804-022C	WASHER LOCK SPRING 5/8 PLT		
8.	814-238C	1.25 X 13.5 PRESS WHEEL ASSY	Includes items 10-14	
9.	405-031D	1/4 PW SPACER 5/8 DIA		
10.	802-005C	HHCS 1/4-20X1 GR5		
11.	803-088C	NUT HEX LOCK 1/4-20 FLG		
12.	814-244C	1.25X13.5 ANGLE PEAK TIRE		
13.	817-330C	1 X 12 PRESS WHEEL RIM HALF		
14.	822-170C	BRG .63ID PRESS WHL ASY		

Press Wheel Assembly LH (S/N B1032A-)

(Applies to YP40 only)

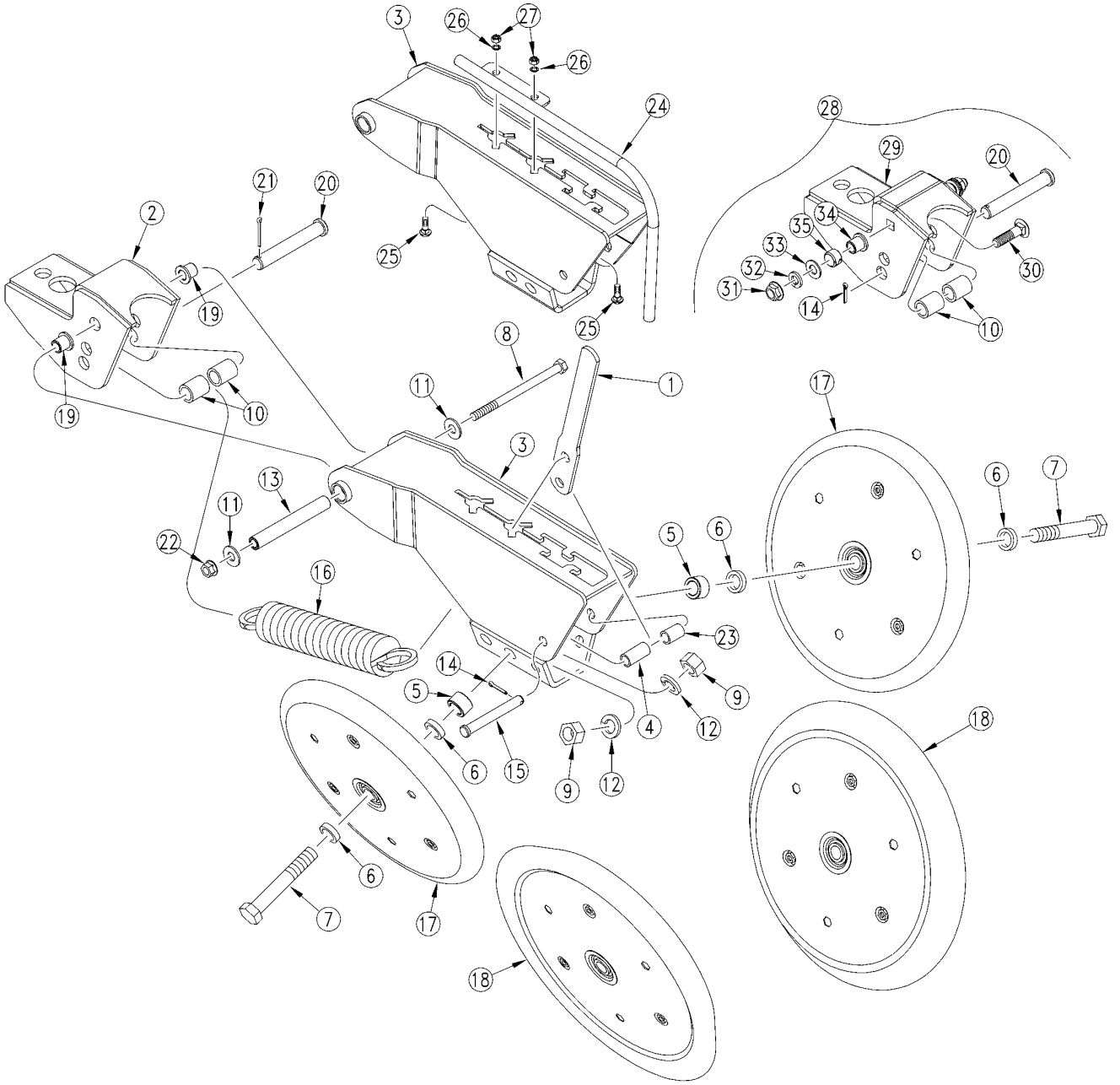

29332

Press Wheel Assembly LH (S/N B1032A-)

(Applies to YP40 only)

Ref.	Part No.	Part Description	Comments	Revision
	dwg29332	Image No.		
1.	199-107D	PW SPRING HANDLE		
2.	199-109H	RPBY 199-147A		
3.	199-057H	25P RH OFFSET PW MOUNT	Used on short (front) stagger row units on twin row spacing	
3.	199-058H	25P LH OFFSET PW MOUNT	Used on long (rear) stagger row units on twin row spacing	
4.	199-088D	25P PW HANDLE SPACER TUBE		
5.	404-147D	PARALLEL ARM PIVOT TUBE		
6.	405-031D	1/4 PW SPACER 5/8 DIA		
7.	802-160C	HHCS 5/8-11X3 1/4 GR5		
8.	802-616C	HHCS 3/8-16X5 1/2 GR5		
9.	803-021C	NUT HEX 5/8-11 PLT		
10.	199-113D	SPRING ALIGNMENT BUSHING		
11.	804-011C	WASHER FLAT 3/8 USS PLT		
12.	804-022C	WASHER LOCK SPRING 5/8 PLT		
13.	199-106D	RPBY 199-146A OR 199-147A		
14.	805-067C	PIN COTTER 1/8 X 3/4		
15.	805-183C	PIN CLEVIS 7/16 X 3 17/64 USBL		
16.	807-278C	SPRING 1 5/8 OD X 8.2		
17.	814-174C	1 X 12 PRESS WHL ASSY-5203BRG	Refer to "Press Wheel Breakdown" for breakdown	
18.	814-238C	1.25 X 13.5 PRESS WHEEL ASSY	Refer to "Press Wheel Breakdown" for breakdown	
19.	817-083C	PRESS WHEEL ARM PIVOT BUSHING		
20.	805-417C	PIN CLEVIS 5/8 X 3 49/64 USBL		
21.	805-109C	PIN COTTER 1/8 X 1 1/4 PLT		
22.	803-209C	NUT FLANGE LOCK 3/8-16 PLT		
23.	199-015D	PW HANDLE SPACER TUBE		
24.	204-133H	LH DRIBBLER TUBE		
25.	802-092C	RHSNB 5/16-18X3/4 GR5		
26.	804-009C	WASHER LOCK SPRING 5/16 PLT		
27.	803-008C	NUT HEX 5/16-18 PLT		
28.	199-147A	25P MID PW MOUNT KIT		
29.	199-149H	25P MID PW MOUNT UPDATE		
30.	802-030C	RHSNB 7/16-14X1 3/4 GR5		
31.	803-229C	NUT HEX FLANGE LOC 7/16-14 PLT		
32.	804-014C	WASHER LOCK 7/16 PLT		
33.	804-041C	WASHER FLAT 7/16 SAE PLT		
34.	890-524C	20 SER PW ARM PIVOT SPACER TB		
35.	890-598C	BUSHING 3/4OD X 5/8ID X 1/2 LG		

Press Wheel Assembly LH (S/N B1033A - B1074A)

(Applies to YP40 only)

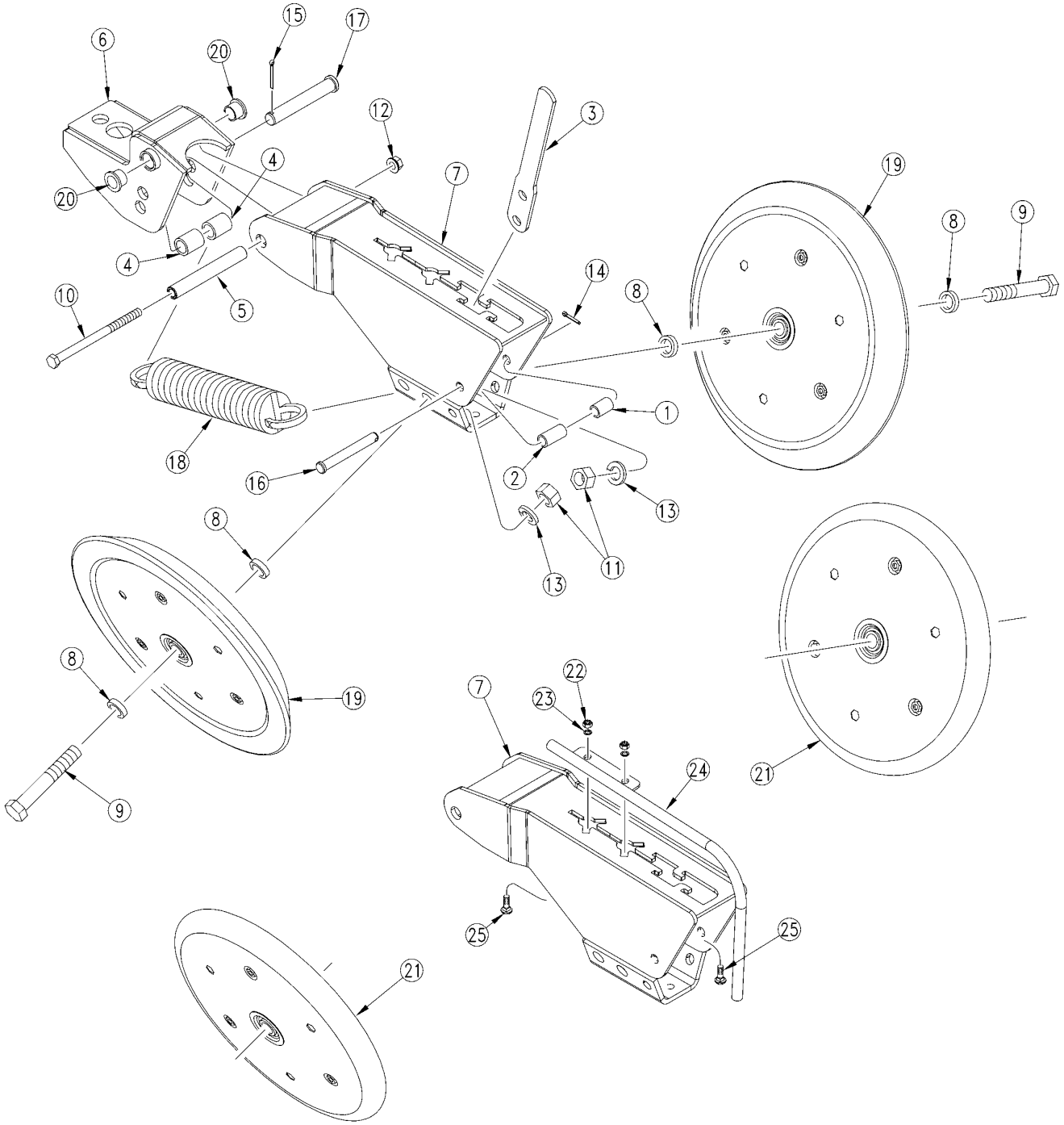

31519

Press Wheel Assembly LH (S/N B1033A - B1074A)

(Applies to YP40 only)

Ref.	Part No.	Part Description	Comments	Revision
	dwg31519	Image No.		
1.	199-015D	PW HANDLE SPACER TUBE		
2.	199-088D	25P PW HANDLE SPACER TUBE		
3.	199-107D	PW SPRING HANDLE		
4.	199-113D	SPRING ALIGNMENT BUSHING		
5.	199-114D	PRESS WHEEL PVT MNT TUBE		
6.	199-141H	25P MID PW MOUNT		
7.	199-143H	25P LH OFFSET PW MOUNT		
8.	405-031D	1/4 PW SPACER 5/8 DIA		
9.	802-160C	HHCS 5/8-11X3 1/4 GR5		
10.	802-413C	HHCS 1/2-13X4 1/2 GR5		
11.	803-021C	NUT HEX 5/8-11 PLT		
12.	803-169C	NUT HEX FLG LOCK 1/2-13 PLT		
13.	804-022C	WASHER LOCK SPRING 5/8 PLT		
14.	805-067C	PIN COTTER 1/8 X 3/4		
15.	805-109C	PIN COTTER 1/8 X 1 1/4 PLT		
16.	805-183C	PIN CLEVIS 7/16 X 3 17/64 USBL		
17.	805-432C	PIN CLEVIS 5/8 X 3 1/4		
18.	807-278C	SPRING 1.8 OC X 11 LG		
19.	814-174C	1 X 12 PRESS WHL ASSY-5203BRG	Refer to Press Wheel Breakdown for breakdown	
20.	817-084C	PARALLEL ARM PIVOT BUSHING		
21.	814-238C	1.25 X 13.5 PRESS WHEEL ASSY	Refer to Press Wheel Breakdown for breakdown	
22.	803-008C	NUT HEX 5/16-18 PLT		
23.	804-009C	WASHER LOCK SPRING 5/16 PLT		
24.	204-133H	LH DRIBBLER TUBE		
25.	802-092C	RHSNB 5/16-18X3/4 GR5		

Press Wheel Assembly RH (S/N B1032A-)

(Applies to YP40 only)

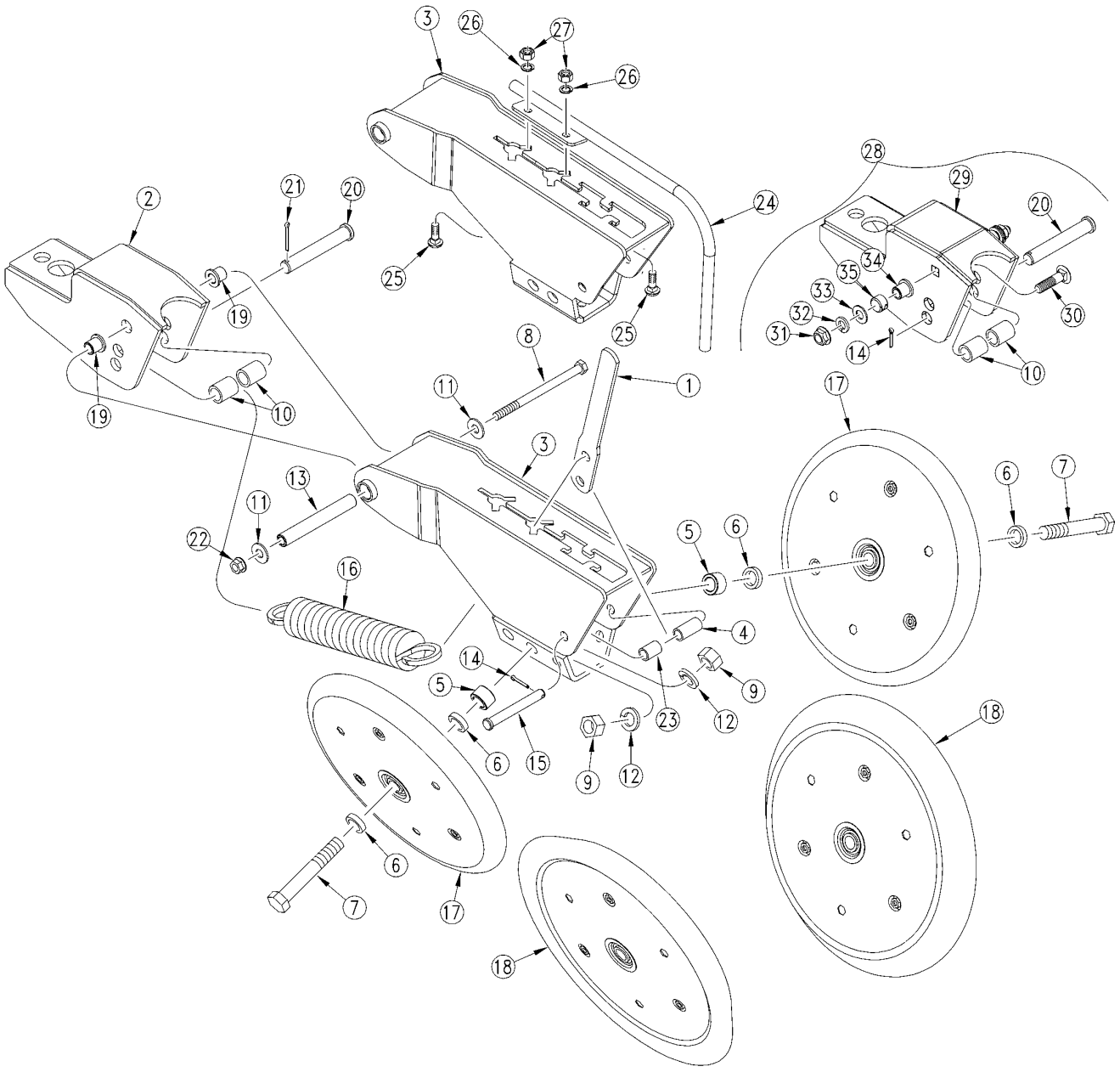

29333

Press Wheel Assembly RH (S/N B1032A-)

(Applies to YP40 only)

Ref.	Part No.	Part Description	Comments	Revision
	dwg29333	Image No.		
1.	199-107D	PW SPRING HANDLE		
2.	199-108H	RPBY 199-146A		
3.	199-057H	25P RH OFFSET PW MOUNT	Used on short (front) stegger row units on twin row spacing	
3.	199-060H	25P LONG PW MOUNT EXTENSION	Used on short (front) stegger row units on twin row spacing	
4.	199-088D	25P PW HANDLE SPACER TUBE		
5.	404-147D	PARALLEL ARM PIVOT TUBE		
6.	405-031D	1/4 PW SPACER 5/8 DIA		
7.	802-160C	HHCS 5/8-11X3 1/4 GR5		
8.	802-616C	HHCS 3/8-16X5 1/2 GR5		
9.	803-021C	NUT HEX 5/8-11 PLT		
10.	199-113D	SPRING ALIGNMENT BUSHING		
11.	804-011C	WASHER FLAT 3/8 USS PLT		
12.	804-022C	WASHER LOCK SPRING 5/8 PLT		
13.	199-106D	RPBY 199-146A OR 199-147A		
14.	805-067C	PIN COTTER 1/8 X 3/4		
15.	805-183C	PIN CLEVIS 7/16 X 3 17/64 USBL		
16.	807-278C	SPRING 1 5/8 OD X 8.2		
17.	814-174C	1 X 12 PRESS WHL ASSY-5203BRG	Refer to "Press Wheel Breakdown" for breakdown	
18.	814-238C	1.25 X 13.5 PRESS WHEEL ASSY	Refer to "Press Wheel Breakdown" for breakdown	
19.	817-083C	PRESS WHEEL ARM PIVOT BUSHING		
20.	805-417C	PIN CLEVIS 5/8 X 3 49/64 USBL		
21.	805-109C	PIN COTTER 1/8 X 1 1/4 PLT		
22.	803-209C	NUT FLANGE LOCK 3/8-16 PLT		
23.	199-015D	PW HANDLE SPACER TUBE		
24.	204-134H	RH DRIBBLER TUBE		
25.	802-092C	RHSNB 5/16-18X3/4 GR5		
26.	804-009C	WASHER LOCK SPRING 5/16 PLT		
27.	803-008C	NUT HEX 5/16-18 PLT		
28.	199-147A	25P MID PW MOUNT KIT		
29.	199-149H	25P MID PW MOUNT UPDATE		
30.	802-030C	RHSNB 7/16-14X1 3/4 GR5		
31.	803-229C	NUT HEX FLANGE LOC 7/16-14 PLT		
32.	804-014C	WASHER LOCK 7/16 PLT		
33.	804-041C	WASHER FLAT 7/16 SAE PLT		
34.	890-524C	20 SER PW ARM PIVOT SPACER TB		
35.	890-598C	BUSHING 3/4OD X 5/8ID X 1/2 LG		

Press Wheel Assembly RH (S/N B1033A - B1074A)

(Applies to YP40 only)

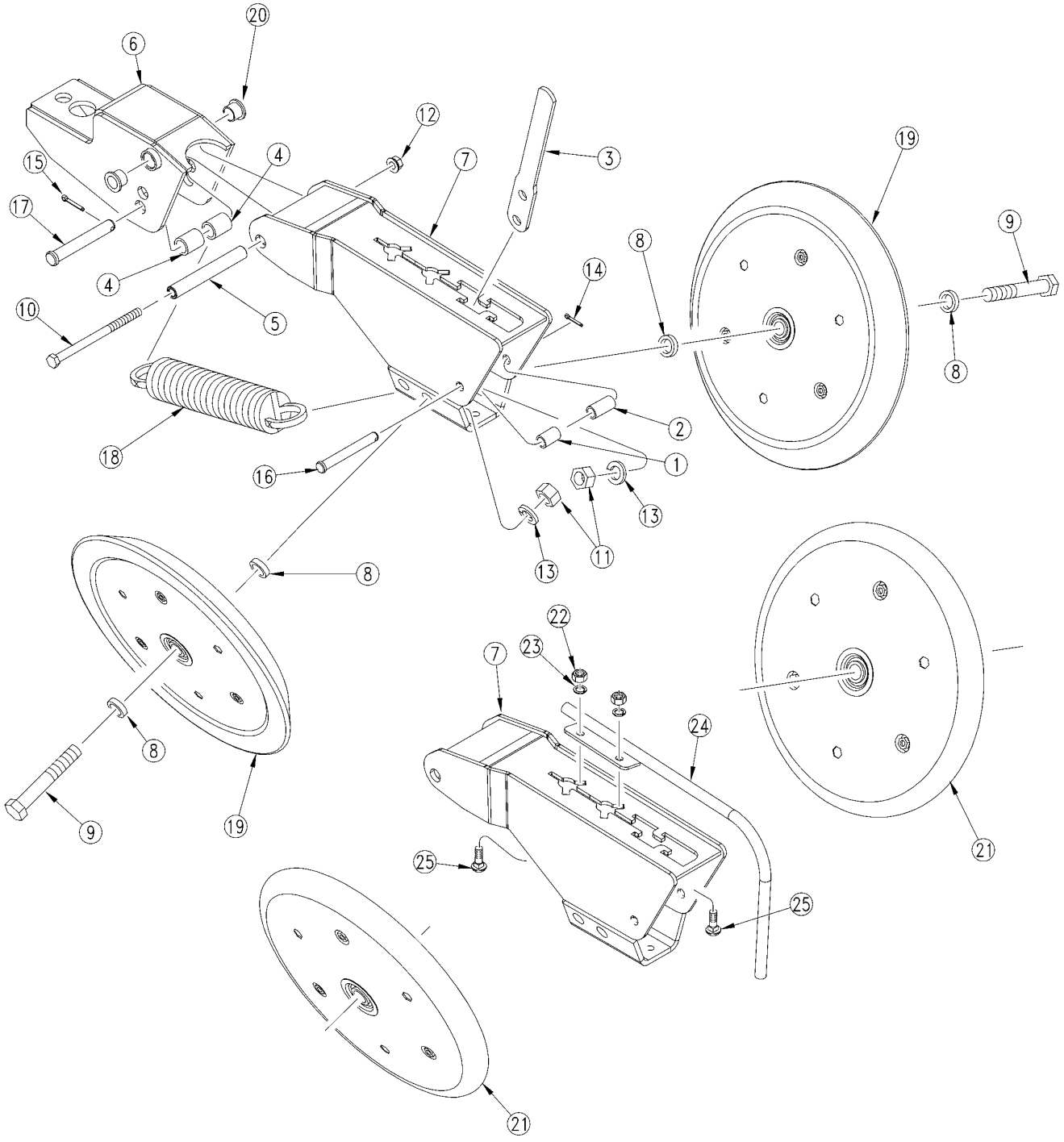

31517

Press Wheel Assembly RH (S/N B1033A - B1074A)

(Applies to YP40 only)

Ref.	Part No.	Part Description	Comments	Revision
	dwg31517	Image No.		
1.	199-015D	PW HANDLE SPACER TUBE		
2.	199-088D	25P PW HANDLE SPACER TUBE		
3.	199-107D	PW SPRING HANDLE		
4.	199-113D	SPRING ALIGNMENT BUSHING		
5.	199-114D	PRESS WHEEL PVT MNT TUBE		
6.	199-140H	LONG PQ MOUNT		
7.	199-142H	25P RH OFFSET PW MOUNT		
8.	405-031D	1/4 PW SPACER 5/8 DIA		
9.	802-160C	HHCS 5/8-11X3 1/4 GR5		
10.	802-413C	HHCS 1/2-13X4 1/2 GR5		
11.	803-021C	NUT HEX 5/8-11 PLT		
12.	803-169C	NUT HEX FLG LOCK 1/2-13 PLT		
13.	804-022C	WASHER LOCK SPRING 5/8 PLT		
14.	805-067C	PIN COTTER 1/8 X 3/4		
15.	805-109C	PIN COTTER 1/8 X 1 1/4 PLT		
16.	805-183C	PIN CLEVIS 7/16 X 3 17/64 USBL		
17.	805-432C	PIN CLEVIS 5/8 X 3 1/4		
18.	807-278C	SPRING 1.8 OC X 11 LG		
19.	814-238C	1.25 X 13.5 PRESS WHEEL ASSY	Refer to Press Wheel Breakdown for breakdown	
20.	817-084C	PARALLEL ARM PIVOT BUSHING		
21.	814-174C	1 X 12 PRESS WHL ASSY-5203BRG	Refer to Press Wheel Breakdown for breakdown	
22.	803-008C	NUT HEX 5/16-18 PLT		
23.	804-009C	WASHER LOCK SPRING 5/16 PLT		
24.	204-134H	RH DRIBBLER TUBE		
25.	802-092C	RHSNB 5/16-18X3/4 GR5		

Press Wheel Assembly with Spider Wheels (S/N B1032A-)

(Applies to YP40 only)

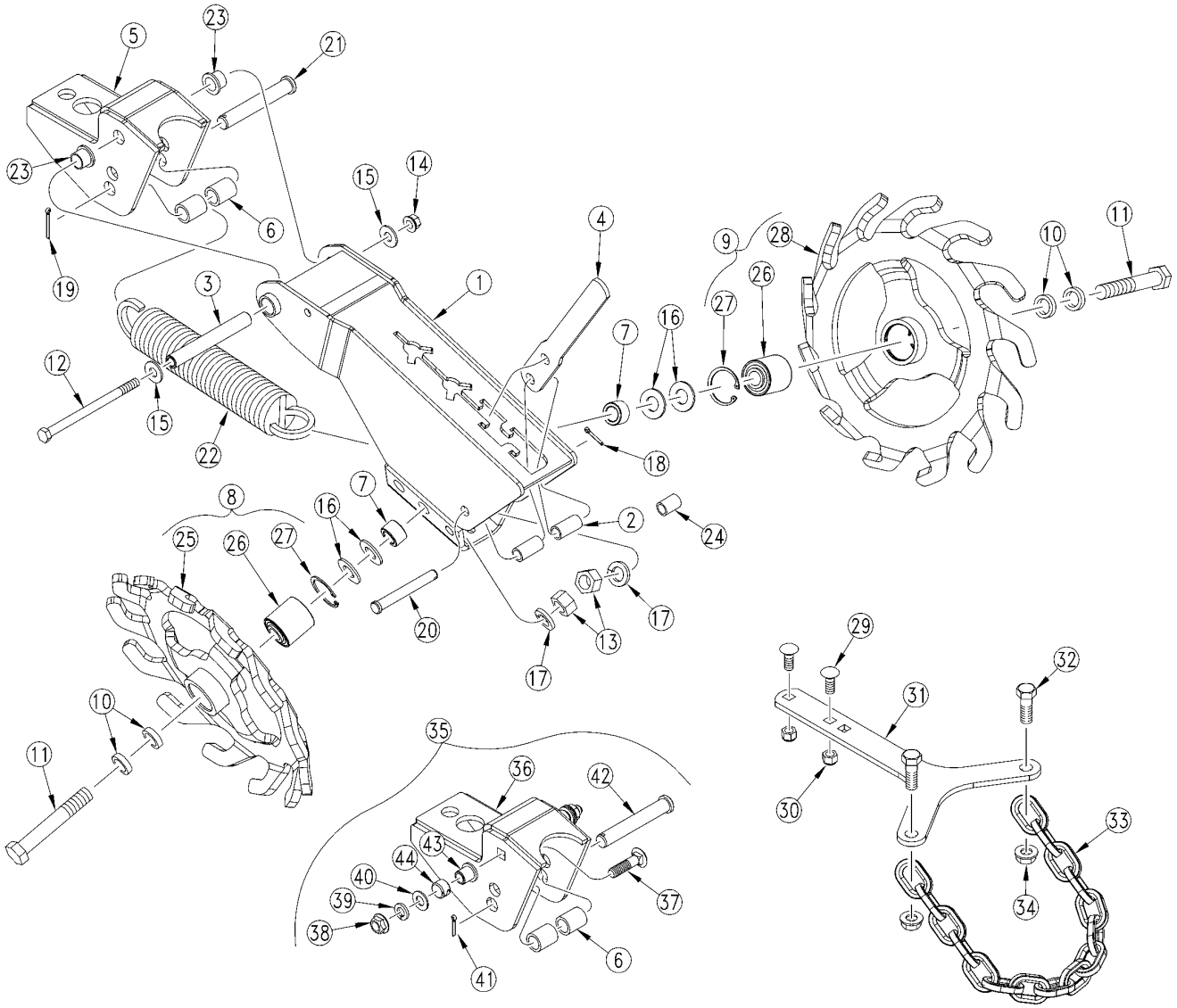

29716

Press Wheel Assembly with Spider Wheels (S/N B1032A-)

(Applies to YP40 only)

Ref.	Part No.	Part Description	Comments	Revision
	dwg29716	Image No.		
1.	199-087H	25P 20 DEG CENTERED PW MOUNT	Shown	
1.	199-057H	25P RH OFFSET PW MOUNT		
1.	199-058H	25P LH OFFSET PW MOUNT		
1.	199-059H	25P 16 DEG CENTERED PW MOUNT	Used on 16 Deg. 10" Spacing	
2.	199-088D	25P PW HANDLE SPACER TUBE		
3.	199-106D	RPBY 199-146A OR 199-147A		
4.	199-107D	PW SPRING HANDLE		
5.	199-108H	RPBY 199-146A		
5.	199-109H	RPBY 199-147A		
6.	199-113D	SPRING ALIGNMENT BUSHING		
7.	404-147D	PARALLEL ARM PIVOT TUBE	Used with 199-087H	
8.	405-023S	LH 45 DEG TOOTH WHEEL ASM		
9.	405-024S	RH 45 DEG TOOTH WHEEL ASM		
10.	405-031D	1/4 PW SPACER 5/8 DIA		
11.	802-060C	HHCS 5/8-11X4 GR5		
11.	802-162C	HHCS 5/8-11X3 1/2 GR5	Used on 16 Deg. 10" Spacing	
12.	802-616C	HHCS 3/8-16X5 1/2 GR5		
13.	803-021C	NUT HEX 5/8-11 PLT		
14.	803-209C	NUT FLANGE LOCK 3/8-16 PLT		
15.	804-011C	WASHER FLAT 3/8 USS PLT		
16.	804-021C	WASHER FLAT 5/8 SAE PLT		
17.	804-022C	WASHER LOCK SPRING 5/8 PLT		
18.	805-067C	PIN COTTER 1/8 X 3/4		
19.	805-109C	PIN COTTER 1/8 X 1 1/4 PLT		
20.	805-183C	PIN CLEVIS 7/16 X 3 17/64 USBL		
21.	805-417C	PIN CLEVIS 5/8 X 3 49/64 USBL		
22.	807-278C	SPRING 1 5/8 OD X 8.2		
23.	817-083C	PRESS WHEEL ARM PIVOT BUSHING		
24.	199-015D	PW HANDLE SPACER TUBE	Used on LH or RH press wheel mount	
25.	405-021H	LH 45 DEG TOOTH CLOSING WHEEL		
26.	822-170C	BRG .63ID PRESS WHL ASY		
27.	800-054C	SNAP RING INT 40 MM		
28.	405-022H	RH 45 DEG TOOTH CLOSING WHEEL		
29.	802-015C	RHSNB 3/8-16X1 GR5		
30.	803-078C	NUT LOCK 3/8-16 NYLON INSERT		
31.	405-055D	PLANTER DRAG CHAIN MOUNT	Shown	
31.	405-057D	PLANTER DRAG CHAIN MNT NARROW	Used on 16 Deg. 10" Spacing	
32.	802-029C	HHCS 7/16-14X1 1/2 GR5		
33.	891-186C	TWIST LINK DRAG CHAIN 16 PITCH		
34.	803-229C	NUT HEX FLANGE LOC 7/16-14 PLT		
35.	199-146A	25P LONG PW MOUNT KIT		
35.	199-147A	25P MID PW MOUNT KIT		
36.	199-148H	25P LONG PW MOUNT UPDATE		
36.	199-149H	25P MID PW MOUNT UPDATE		
37.	802-030C	RHSNB 7/16-14X1 3/4 GR5		
38.	803-229C	NUT HEX FLANGE LOC 7/16-14 PLT		
39.	804-014C	WASHER LOCK 7/16 PLT		
40.	804-041C	WASHER FLAT 7/16 SAE PLT		
41.	805-067C	PIN COTTER 1/8 X 3/4		
42.	805-417C	PIN CLEVIS 5/8 X 3 49/64 USBL		
43.	890-524C	20 SER PW ARM PIVOT SPACER TB		
44.	890-598C	BUSHING 3/4OD X 5/8ID X 1/2 LG		

Press Wheel Assembly with Spider Wheels (S/N B1033A - B1074A)

(Applies to YP40 only)

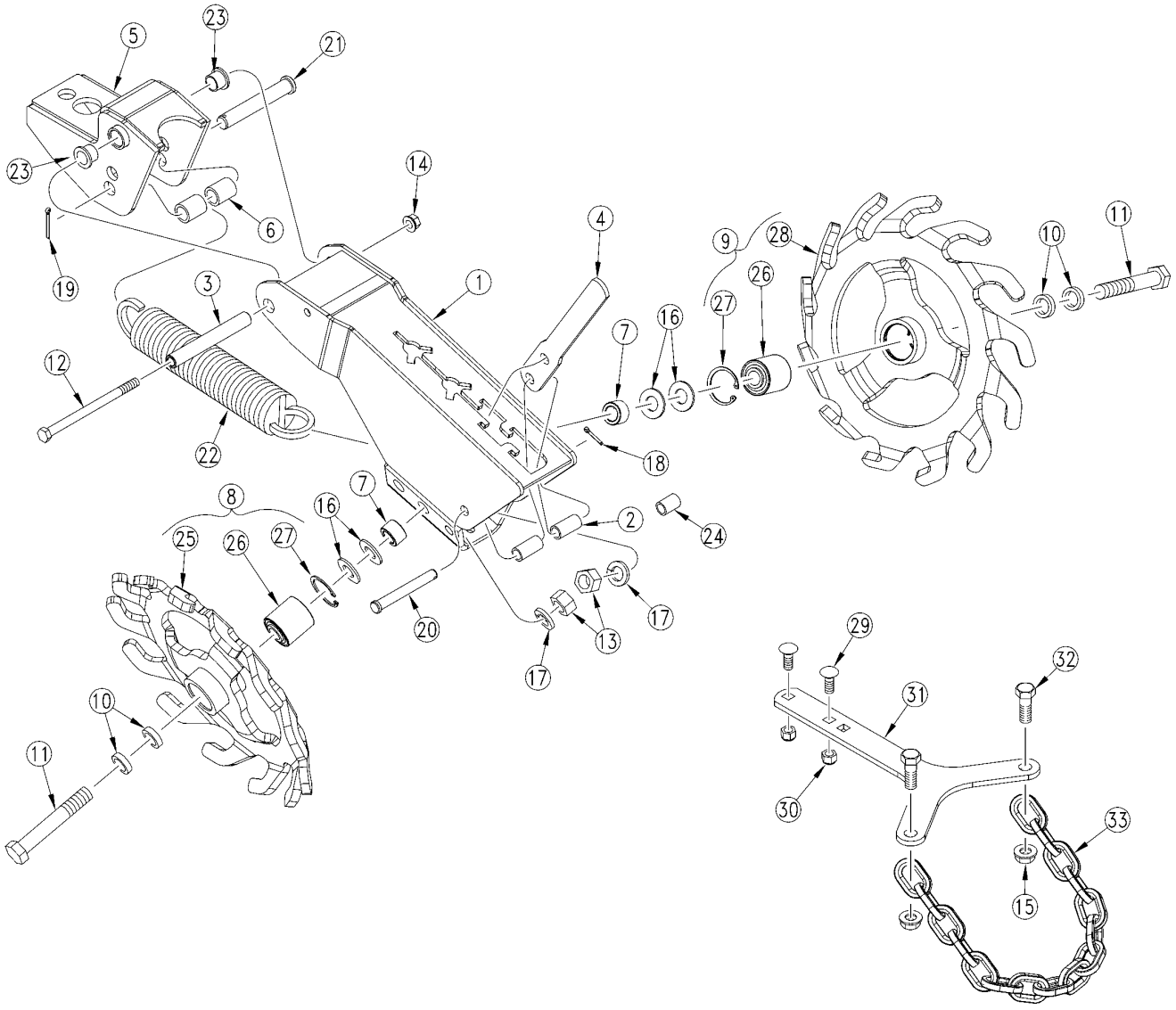

31520

Press Wheel Assembly with Spider Wheels (S/N B1033A - B1074A)

(Applies to YP40 only)

Ref.	Part No.	Part Description	Comments	Revision
	dwg31520	Image No.		
1.	199-145H	25P 20 DEG CENTERED PW MOUNT	Shown. Used with 20 Deg Press Wheels	
1.	199-144H	25P 16 DEG CENTERED PW MOUNT	Used with 16 Deg Press Wheels	
1.	199-143H	25P LH OFFSET PW MOUNT	LH	
1.	199-142H	25P RH OFFSET PW MOUNT	RH	
2.	199-088D	25P PW HANDLE SPACER TUBE		
3.	199-114D	PRESS WHEEL PVT MNT TUBE		
4.	199-107D	PW SPRING HANDLE		
5.	199-141H	25P MID PW MOUNT	Shown	
5.	199-140H	LONG PQ MOUNT		
6.	199-113D	SPRING ALIGNMENT BUSHING		
7.	404-147D	PARALLEL ARM PIVOT TUBE	Only used with 20 Deg Press Wheels	
8.	405-023S	LH 45 DEG TOOTH WHEEL ASM	Includes items 25-27	
9.	405-024S	RH 45 DEG TOOTH WHEEL ASM	Includes items 26-28	
10.	405-031D	1/4 PW SPACER 5/8 DIA		
11.	802-060C	HHCS 5/8-11X4 GR5	Only used with 20 Deg Press Wheels	
11.	802-162C	HHCS 5/8-11X3 1/2 GR5		
12.	802-413C	HHCS 1/2-13X4 1/2 GR5		
13.	803-021C	NUT HEX 5/8-11 PLT		
14.	803-169C	NUT HEX FLG LOCK 1/2-13 PLT		
15.	803-229C	NUT HEX FLANGE LOC 7/16-14 PLT		
16.	804-021C	WASHER FLAT 5/8 SAE PLT	Not used with 20 Deg Press Wheels	
17.	804-022C	WASHER LOCK SPRING 5/8 PLT		
18.	805-067C	PIN COTTER 1/8 X 3/4		
19.	805-109C	PIN COTTER 1/8 X 1 1/4 PLT		
20.	805-183C	PIN CLEVIS 7/16 X 3 17/64 USBL		
21.	805-432C	PIN CLEVIS 5/8 X 3 1/4		
22.	807-278C	SPRING 1 5/8 OD X 8.2		
23.	817-084C	PARALLEL ARM PIVOT BUSHING		
24.	199-015D	PW HANDLE SPACER TUBE	Used on LH or RH press wheel mount	
25.	405-021H	LH 45 DEG TOOTH CLOSING WHEEL		
26.	822-170C	BRG .63ID PRESS WHL ASY		
27.	800-054C	SNAP RING INT 40 MM		
28.	405-022H	RH 45 DEG TOOTH CLOSING WHEEL		
29.	802-015C	RHSNB 3/8-16X1 GR5		
30.	803-078C	NUT LOCK 3/8-16 NYLON INSERT		
31.	405-055D	PLANTER DRAG CHAIN MOUNT	Shown	
31.	405-057D	PLANTER DRAG CHAIN MNT NARROW	Used on 16 Deg. 10" Spacing	
32.	802-029C	HHCS 7/16-14X1 1/2 GR5		
33.	891-186C	TWIST LINK DRAG CHAIN 16 PITCH		

Press Wheel Assembly With Spider Wheels (S/N B1075A+)

(Applies to YP40 only)

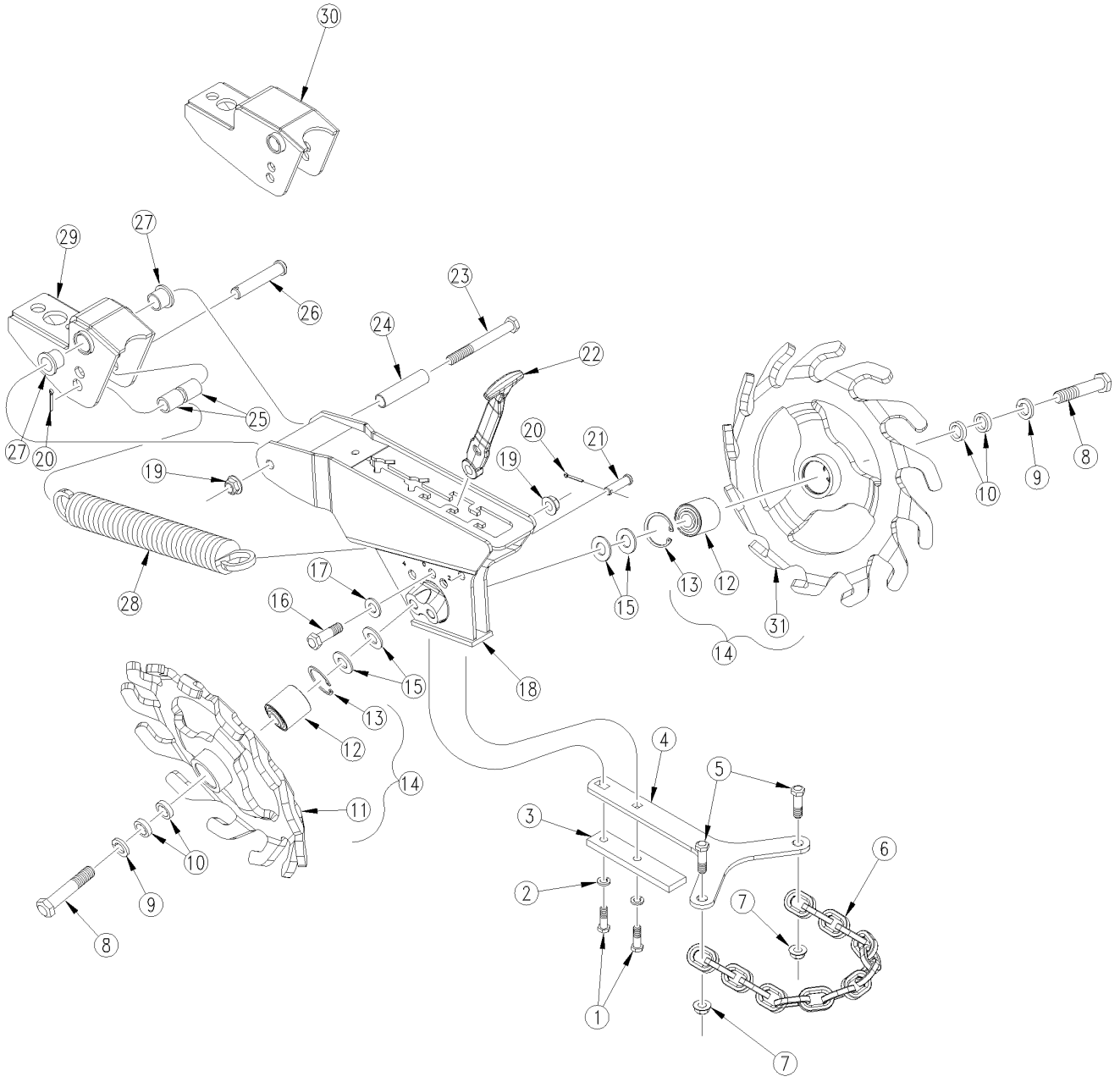

34484

Press Wheel Assembly With Spider Wheels (S/N B1075A+)

(Applies to YP40 only)

Ref.	Part No.	Part Description	Comments	Revision
	dwg34484	Image No.		
1.	802-079C	HHCS 3/8-16X1 1/4 GR5		
2.	804-013C	WASHER LOCK SPRING 3/8 PLT		
3.	405-063D	DRAG CHAIN BACKUP PLATE		
4.	405-055D	PLANTER DRAG CHAIN MOUNT		
5.	802-029C	HHCS 7/16-14X1 1/2 GR5		
6.	891-186C	TWIST LINK DRAG CHAIN 16 PITCH		
7.	803-229C	NUT HEX FLANGE LOC 7/16-14 PLT		
8.	802-160C	HHCS 5/8-11X3 1/4 GR5		
9.	804-022C	WASHER LOCK SPRING 5/8 PLT		
10.	405-031D	1/4 PW SPACER 5/8 DIA		
11.	405-021H	LH 45 DEG TOOTH CLOSING WHEEL		
12.	822-170C	BRG .63ID PRESS WHL ASY		
13.	800-054C	SNAP RING INT 40 MM		
14.	405-023S	LH 45 DEG TOOTH WHEEL ASM	Left Hand, Includes items: 11-13	
14.	405-024S	RH 45 DEG TOOTH WHEEL ASM	Right Hand, Includes items: 12, 13 & 31	
15.	804-021C	WASHER FLAT 5/8 SAE PLT		
16.	802-082C	HHCS 1/2-13X1 3/4 GR5		
17.	804-094C	WASHER FLAT 1/2 HARD ASTMF436		
18.	199-153H	25 SER 12 DEG STAG PW ARM WLD		
19.	803-169C	NUT HEX FLG LOCK 1/2-13 PLT		
20.	805-363C	PIN COTTER 1/8 X 1		
21.	805-436C	PIN CLEVIS 7/16 X 1 1/2		
22.	812-398C	PRESS WHEEL SPRING ADJ HANDLE		
23.	802-413C	HHCS 1/2-13X4 1/2 GR5		
24.	199-114D	PRESS WHEEL PVT MNT TUBE		
25.	199-113D	SPRING ALIGNMENT BUSHING		
26.	805-432C	PIN CLEVIS 5/8 X 3 1/4		
27.	817-084C	PARALLEL ARM PIVOT BUSHING		
28.	807-278C	SPRING 1.8 OC X 11 LG		
29.	199-141H	25P MID PW MOUNT		
30.	199-140H	LONG PW MOUNT		
31.	405-022H	RH 45 DEG TOOTH CLOSING WHEEL		

Closing Wheel Drop Mount

(Applies to YP40 only)

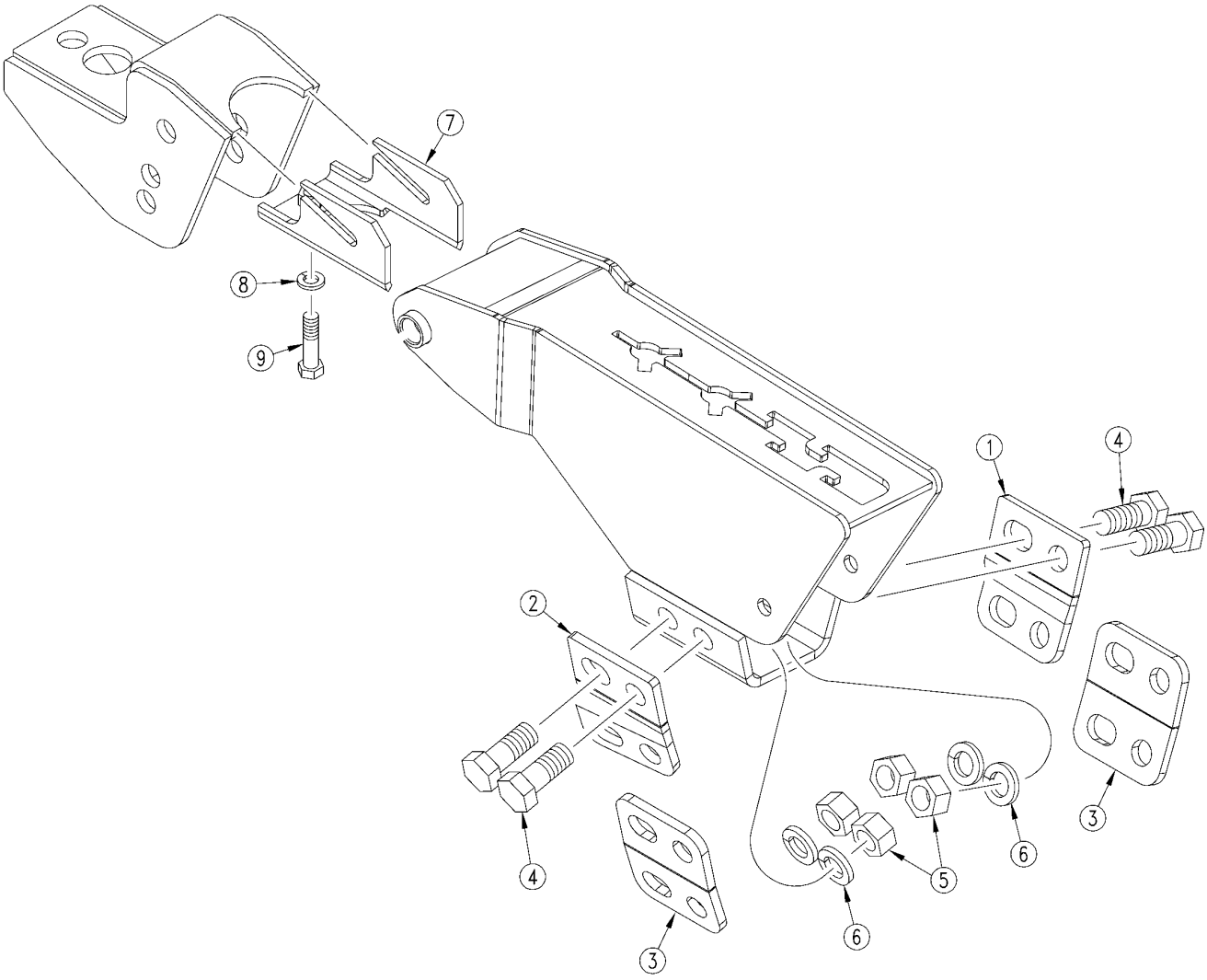

29590

Closing Wheel Drop Mount

(Applies to YP40 only)

Ref.	Part No.	Part Description	Comments	Revision
	dwg29590	Image No.		
1.	405-053D	RH CLOSING WHEEL DROP PLATE		
2.	405-054D	LH CLOSING WHEEL DROP PLATE		
3.	405-052D	PLATE 1X10 OFFSET TO 25P		
4.	802-051C	HHCS 5/8-11X1 1/2 GR5		
5.	803-021C	NUT HEX 5/8-11 PLT		
6.	804-022C	WASHER LOCK SPRING 5/8 PLT		
7.	405-028H	SPACER WELDMENT		
8.	804-013C	WASHER LOCK SPRING 3/8 PLT		
9.	802-022C	HHCS 3/8-16X1 1/2 GR5		

Press Wheel Breakdown

(Applies to YP40 only)

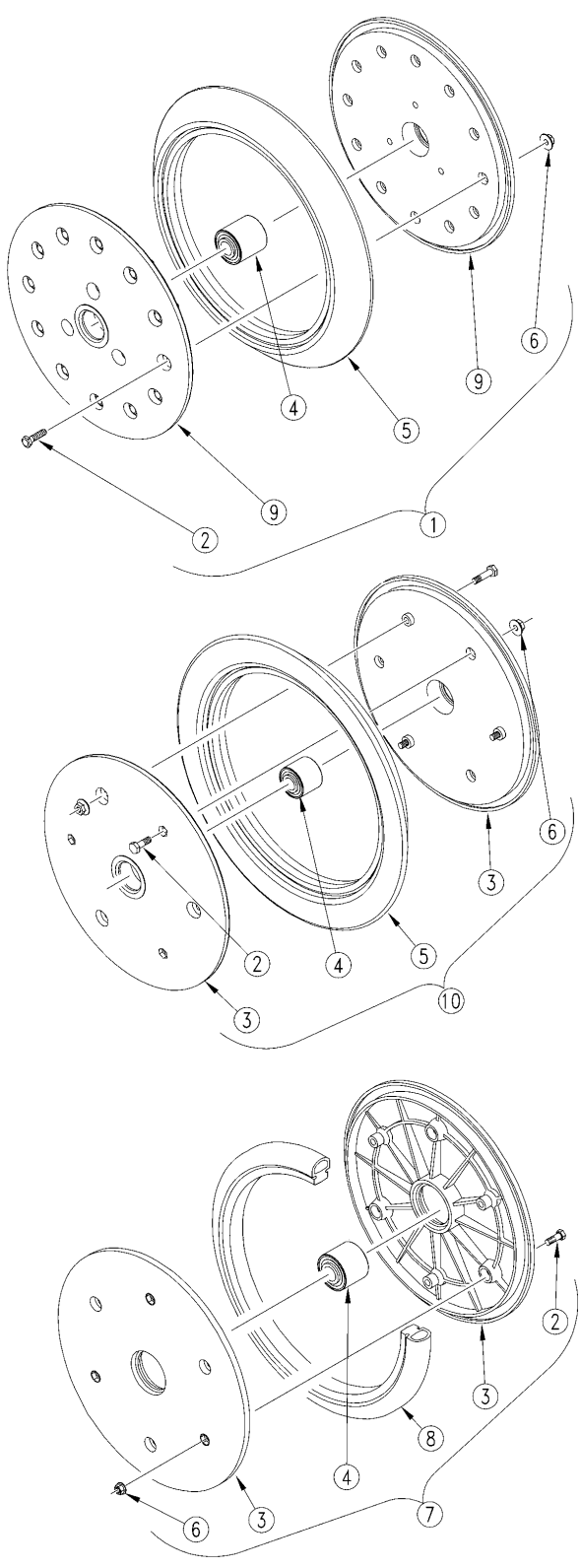

34570

Press Wheel Breakdown

(Applies to YP40 only)

Ref.	Part No.	Part Description	Comments	Revision
	dwg34570	Image No.		
1.	814-400C	1.25 X 13.5 WEDGE HD PW ASSY		
2.	802-005C	HHCS 1/4-20X1 GR5		
3.	817-330C	1 X 12 PRESS WHEEL RIM HALF		
4.	822-170C	BRG .63ID PRESS WHL ASY		
5.	814-244C	1.25 X 13.5 PRESS WHEEL TIRE		
6.	803-088C	NUT HEX LOCK 1/4-20 FLG		
7.	814-174C	1 X 12 PRESS WHL ASSY-5203BRG		
8.	814-034C	TIRE RUBBER 1 X 12		
9.	817-886C	1 X 12 HD PRESS WHEEL RIM HALF		
10.	814-238C	RPBY 814-400C	(S/N-)	

Hydraulic Drive Components

(Applies to YP40 only)

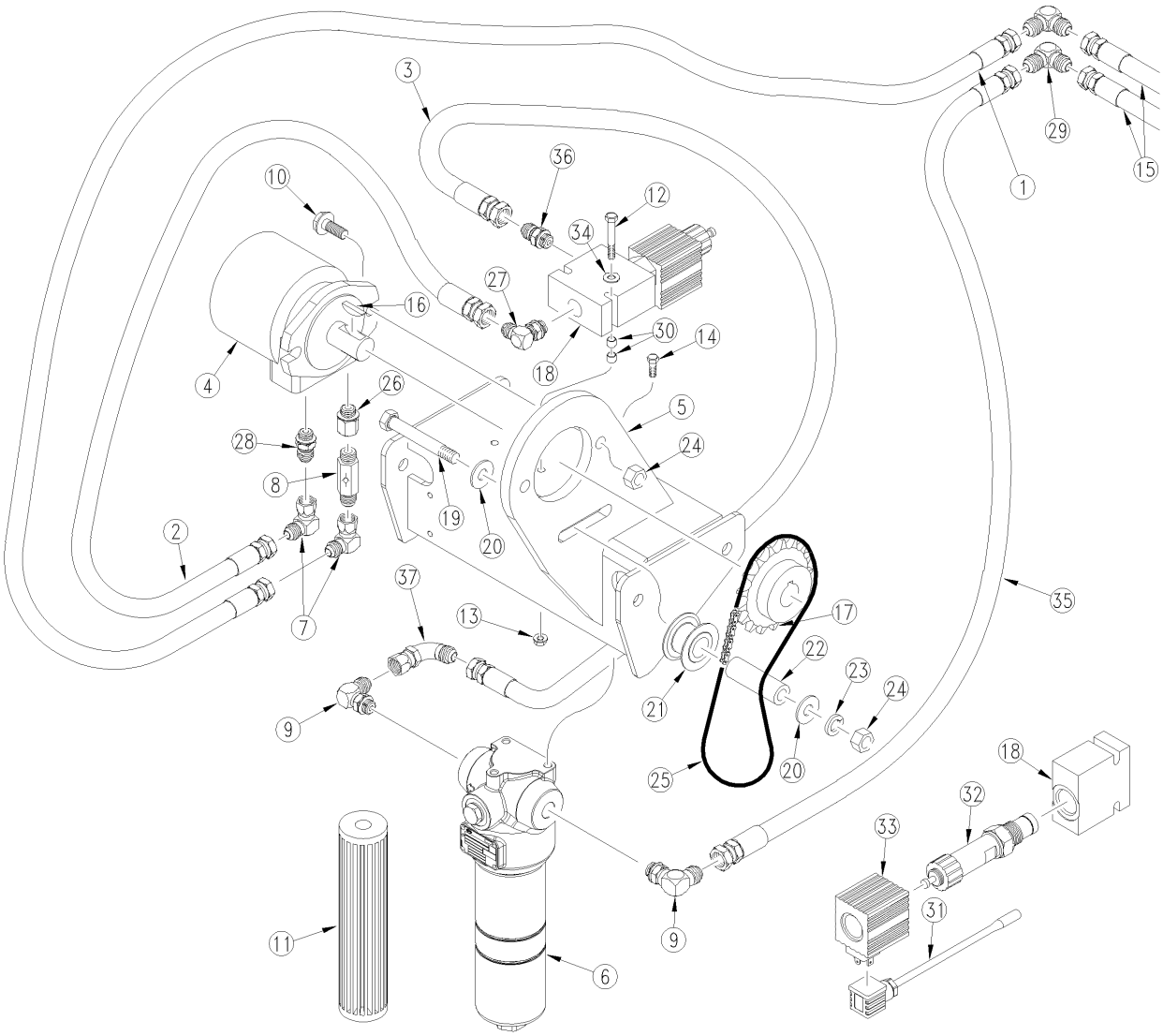

29218

Hydraulic Drive Components

(Applies to YP40 only)

Ref.	Part No.	Part Description	Comments	Revision
	dwg29218	Image No.		
1.	811-266C	HH1/2R2 192 3/4FJIC		
2.	841-196C	HH1/2R2 024 3/4FJIC		
3.	811-331C	HH1/2R2 020 3/4FJIC		
4.	810-603C	MOTOR 8.8 CU IN FC6 MNT KEYED		
5.	402-211H	YP24 DRIVE MOTOR MNT WLDMNT		
6.	850-066C	FILTER ASM 6000PSI 6MICRON		
7.	811-150C	EL 3/4FJIC 3/4MJIC		
8.	810-696C	VALVE INLINE CHECK W/ ORIFICE		
9.	811-091C	EL 3/4MJIC 1 1/16MORB		
10.	802-203C	HFSS 1/2-13X1 1/2 GR5		
11.	850-507C	FILTER ELEMENT 6 MICRON	Please contact Great Plains Parts Department before ordering!	
12.	802-138C	HHCS 5/16-18X2 1/4 GR5		
13.	803-177C	NUT HEX FLG TP LK 5/16-18ZNYCR		
14.	VER-18548	VERIS BLT FLG SER8.8M8-1.25X16		
15.	841-163C	HH1/2R2 365 3/4MORB 3/4FJIC		
16.	VER-20317	VERIS KEY WOODRUFF		
17.	808-388C	SPKT 60B16 X 1 BORE W/KWAY, SS		
18.	VER-19800	VERIS VLV BODY SAE-12-2X SAE-8		
19.	802-041C	HHCS 1/2-13X3 1/2 GR5		
20.	804-113C	WASHER FLAT 1/2 USS HARD PLT		
21.	817-770C	IDLER SPOOL #60 2.38X1.01X1.68		
22.	120-306D	TUBE RND 1 OD X 7/32W X 2.13		
23.	804-015C	WASHER LOCK SPRING 1/2 PLT		
24.	803-020C	NUT HEX 1/2-13 PLT		
25.	136-247D	CHAIN RL #60 41 PITCHES		
26.	811-564C	AD 3/4FORB 7/8MORB		
27.	811-063C	EL 3/4MJIC 3/4MORB		
28.	811-192C	AD 3/4MJIC 7/8MORB		
29.	811-725C	EL 90 3/4MJIC		
30.	119-278D	WALKBOARD LADDER PIVOT BUSHING		
31.	VER-18375	VERIS SOLENOID CABLE		
32.	VER-19798	VERIS PROPORTIONAL CARTR 14GPM		
33.	VER-19799	VERIS COIL 12V WATERMAN CARTR		
34.	804-010C	WASHER FLAT 5/16 USS PLT		
35.	811-846C	HH1/2R2 174 3/4FJIC		
36.	811-088C	AD 3/4MORB 3/4MJIC		
37.	811-040C	EL 45 3/4MJIC 3/4FJIC		

Fold - Marker And Auxilliary Hydraulics (S/N B1009A-)

(Applies to YP40 only)

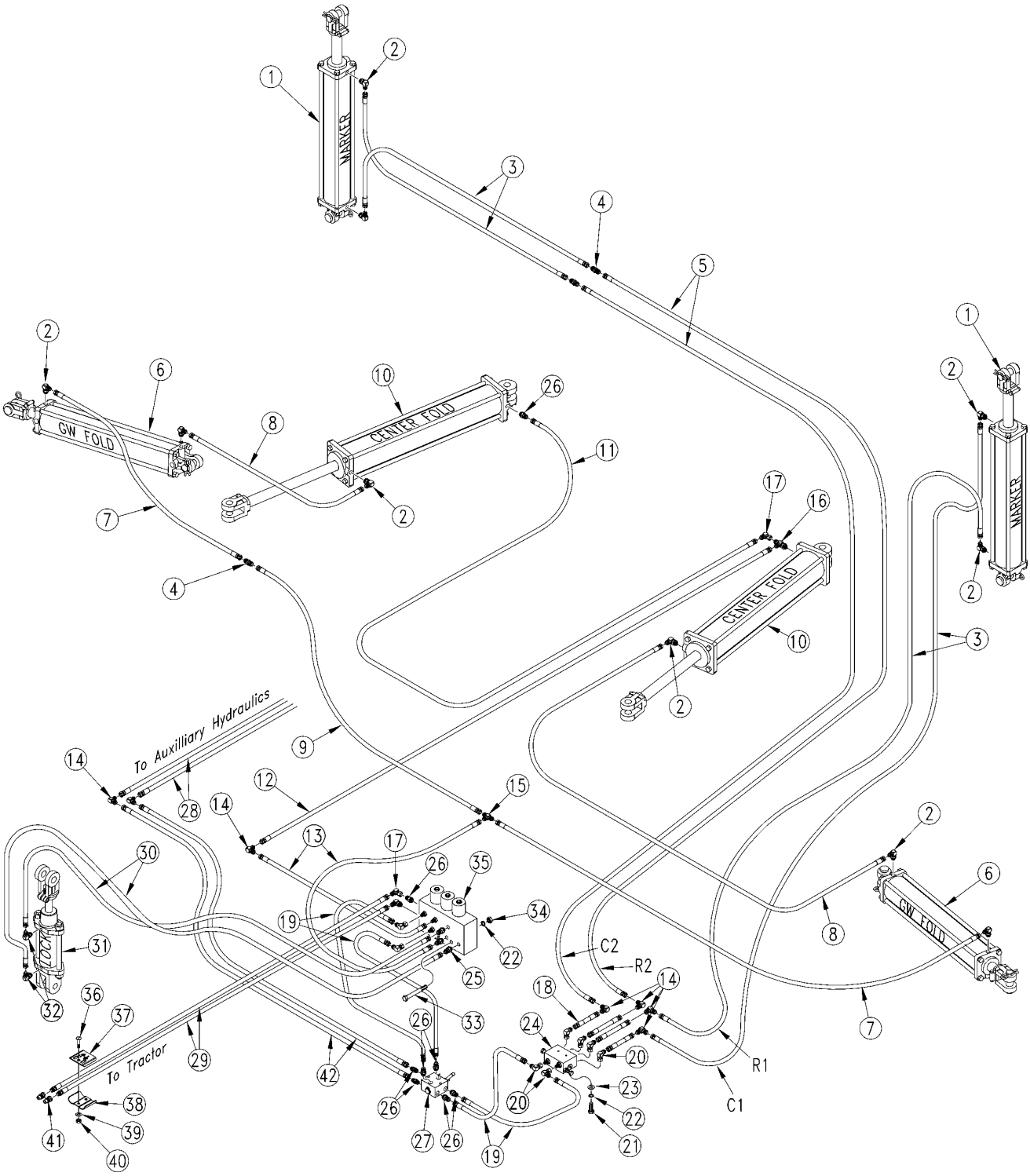

29221

Fold - Marker And Auxilliary Hydraulics (S/N B1009A-)

(Applies to YP40 only)

Ref.	Part No.	Part Description	Comments	Revision
	dwg29221	Image No.		
1.	810-423C	CYL 3X24X1.50 ROD (TIE ROD)	Refer to "Hydraulic Cylinder (810-423C 3x24x1.5 Rod)" for breakdown	
2.	811-063C	EL 3/4MJIC 3/4MORB		
3.	811-851C	HH3/8R2 126 3/4FJIC		
4.	811-430C	AD 3/4MJIC 3/4MJIC		
5.	811-908C	HH3/8R2 320 3/4FJIC		
6.	810-606C	CYL REP 4X24X1 1/2 ROD RH	(RH Cylinder) Refer to "Hydraulic Cylinder (810-606C 4 x 24 x 1.5 Rod)" for breakdown	
6.	810-674C	CYL REP 4X24X1 1/2 ROD LH	(LH Cylinder) Refer to "Hydraulic Cylinder (810-674C 4 x 24 x 1.5 Rod)" for breakdown	
7.	811-978C	HH3/8R2 093 3/4FJIC		
8.	811-889C	HH3/8R2 300 3/4FJIC		
9.	811-908C	HH3/8R2 320 3/4FJIC		
10.	810-607C	CYL REP 4 1/4X24X1 1/2 ROD RH	(RH Cylinder) Refer to "Hydraulic Cylinder (810-607C 4 1/4X24X1 1/2 ROD)" for breackdown	
10.	810-675C	CYL REP 4 1/4X24X1 1/2 ROD LH	(LH Cylinder) Refer to "Hydraulic Cylinder (810-675C 4 1/4X24X1 1/2 ROD)" for breackdown	
11.	811-687C	HH3/8R2 108 3/4FJIC 3/4FJIC		
12.	811-970C	HH3/8R2 219 3/4FJIC		
13.	811-929C	HH3/8R2 030 3/4FJIC		
14.	811-725C	EL 90 3/4MJIC		
15.	811-078C	TE 3/4MJIC		
16.	811-077C	TE 3/4MORB 3/4MJIC 3/4MJIC		
17.	811-150C	EL 3/4FJIC 3/4MJIC		
18.	841-215C	HH3/8R2 026 9/16FJIC 3/4FJIC		
19.	811-286C	HH3/8R2 020 3/4FJIC 9/16FJIC		
20.	811-169C	EL 9/16MJIC 9/16FJIC		
21.	802-022C	HHCS 3/8-16X1 1/2 GR5		
22.	804-013C	WASHER LOCK SPRING 3/8 PLT		
23.	804-011C	WASHER FLAT 3/8 USS PLT		
24.	810-197C	VALVE,SEQUENCE SHOEMAKER	Refer to "Sequence Valve (810-197C)" for breakdown	
25.	811-133C	AD 9/16MJIC 3/4MORB		
26.	811-088C	AD 3/4MORB 3/4MJIC		
27.	810-274C	DOUBLE SELECTOR VALVE 3/4FORB		
28.	841-137C	HH3/8R2 324 3/4MORB 3/4FJIC		
29.	811-367C	HH1/2R2 348 3/4MORB 3/4FJIC		
30.	811-957C	HH1/4R2 300 9/16FJIC		
31.	810-555C	CYL 1.5X2.5X.75 ROD W/CLEVIS	Refer to "Hydraulic Cylinder (810-555C 1.5 x 2.5 x .75 Rod)" for breakdown	
32.	811-065C	EL 9/16MJIC 9/16MORB		
33.	802-147C	HHCS 3/8-16X3 1/2 GR5		
34.	803-014C	NUT HEX 3/8-16 PLT		
35.	810-636C	VALVE 3 WAY MULTIPLIER	Refer to "Fasse 3 Way Multiplier (810-636C)" for breakdown	
36.	802-009C	RHSNB 5/16-18X1 1/4 GR5		
37.	502-067D	HYD HOSE CLAMP LABEL		
38.	502-068D	HYD HOSE CLAMP BRACKET		
39.	804-010C	WASHER FLAT 5/16 USS PLT		
40.	803-199C	NUT HEX FLANGE 5/16-18 PLT		
41.	811-394C	CP 3/4FORB MALE QD POPPET TYPE		
42.	811-841C	HH3/8R2 024 3/4FJIC		

Fold - Marker and Auxilliary Hydraulics (S/N B1010A+)

(Applies to YP40 only)

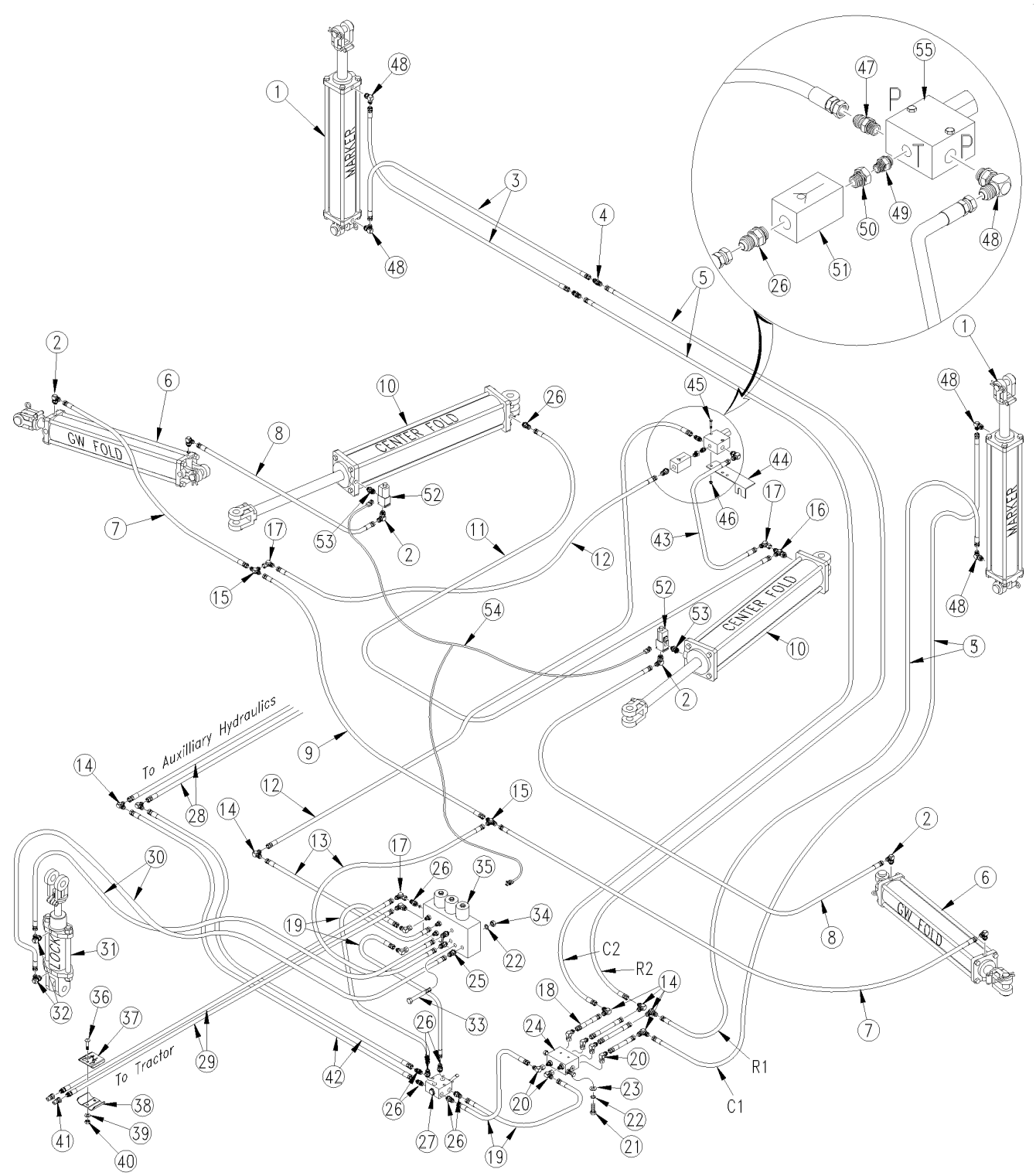

38171

Fold - Marker and Auxilliary Hydraulics (S/N B1010A+)

(Applies to YP40 only)

Ref.	Part No.	Part Description	Comments	Revision
	dwg38171	Image No.		
1.	810-423C	CYL 3X24X1.50 ROD (TIE ROD)		
2.	811-063C	EL 3/4MJIC 3/4MORB		
3.	811-851C	HH3/8R2 126 3/4FJIC		
4.	811-430C	AD 3/4MJIC 3/4MJIC		
5.	811-908C	HH3/8R2 323 3/4FJIC		
6.	810-606C	CYL REP 4X24X1 1/2 ROD RH		
6.	810-674C	CYL REP 4X24X1 1/2 ROD LH		
7.	811-978C	HH3/8R2 093 3/4FJIC		
8.	811-889C	HH3/8R2 300 3/4FJIC		
9.	811-908C	HH3/8R2 320 3/4FJIC		
10.	810-607C	CYL REP 4 1/4X24X1 1/2 ROD RH		
10.	810-675C	CYL REP 4 1/4X24X1 1/2 ROD LH		
11.	811-687C	HH3/8R2 108 3/4FJIC 3/4FJIC		
12.	811-970C	HH3/8R2 219 3/4FJIC		
13.	811-929C	HH3/8R2 030 3/4FJIC		
14.	811-725C	EL 90 3/4MJIC		
15.	811-078C	TE 3/4MJIC		
16.	811-077C	TE 3/4MORB 3/4MJIC 3/4MJIC		
17.	811-150C	EL 3/4FJIC 3/4MJIC		
18.	841-215C	HH3/8R2 026 9/16FJIC 3/4FJIC		
19.	811-286C	HH3/8R2 020 3/4FJIC 9/16FJIC		
20.	811-169C	EL 9/16MJIC 9/16FJIC		
21.	802-022C	HHCS 3/8-16X1 1/2 GR5		
22.	804-013C	WASHER LOCK SPRING 3/8 PLT		
23.	804-011C	WASHER FLAT 3/8 USS PLT		
24.	810-422C	VALVE,SEQ SHOEMAKER HI FLO		
25.	811-133C	AD 9/16MJIC 3/4MORB		
26.	811-088C	AD 3/4MORB 3/4MJIC		
27.	810-274C	DOUBLE SELECTOR VALVE 3/4FORB		
28.	841-137C	HH3/8R2 324 3/4MORB 3/4FJIC		
29.	811-367C	HH1/2R2 348 3/4MORB 3/4FJIC		
30.	811-957C	HH1/4R2 300 9/16FJIC		
31.	810-555C	CYL 1.5X2.5X.75 ROD W/CLEVIS		
32.	811-065C	EL 9/16MJIC 9/16MORB		
33.	802-147C	HHCS 3/8-16X3 1/2 GR5		
34.	803-014C	NUT HEX 3/8-16 PLT		
35.	810-636C	VALVE 3 WAY MULTIPLIER		
36.	802-009C	RHSNB 5/16-18X1 1/4 GR5		
37.	502-067D	HYD HOSE CLAMP LABEL		
38.	502-068D	HYD HOSE CLAMP BRACKET		
39.	804-010C	WASHER FLAT 5/16 USS PLT		
40.	803-199C	NUT HEX FLANGE 5/16-18 PLT		
41.	811-394C	CP 3/4FORB MALE QD POPPET TYPE		
42.	811-841C	HH3/8R2 024 3/4FJIC		
43.	841-008C	HH3/8R2 017 3/4FJIC		
44.	411-603D	BKT RELIEF VALVE SUPPORT		
45.	802-370C	HHCS 1/4-20X1 3/4 GR5		
46.	803-194C	NUT HEX WHIZ 1/4-20 PLT		
47.	811-584C	AD 9/16MORB 3/4MJIC		
48.	811-216C	EL 3/4MJIC 9/16MORB		
49.	811-636C	AD 9/16MORB STRAIGHT UNION		
50.	841-103C	AD 3/4MORB 9/16FORB		
51.	810-037C	VALVE LINE CHECK		
52.	810-342C	NC POPPET SOLENOID VALVE		
53.	811-086C	AD 3/4MORB		
54.	833-515C	EXT HARNESS FOLD LOCK VALVES		
55.	810-348C	RELIEF VALVE 1350 PSI TAMP PRF		

Auxiliary Hydraulics with No Markers

(Applies to YP40 only)

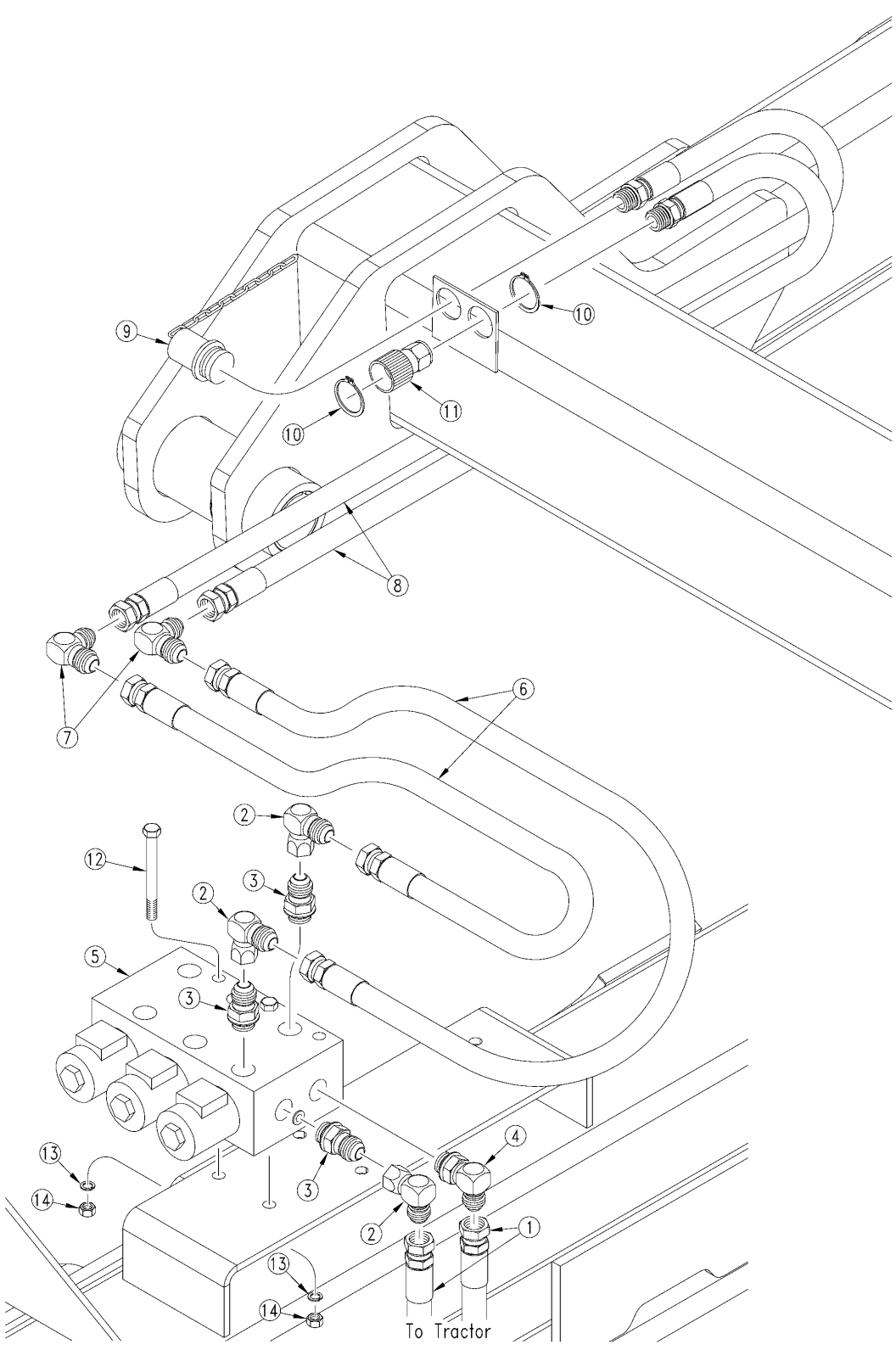

29245

Auxiliary Hydraulics with No Markers

(Applies to YP40 only)

Ref.	Part No.	Part Description	Comments	Revision
	dwg29245	Image No.		
1.	841-211C	HH1/2R2 432 3/4MORB 3/4FJIC		
2.	811-150C	EL 3/4FJIC 3/4MJIC		
3.	811-088C	AD 3/4MORB 3/4MJIC		
4.	811-063C	EL 3/4MJIC 3/4MORB		
5.	810-636C	VALVE 3 WAY MULTIPLIER		
6.	811-841C	HH3/8R2 024 3/4FJIC		
7.	811-725C	EL 90 3/4MJIC		
8.	841-137C	HH3/8R2 324 3/4MORB 3/4FJIC		
9.	841-207C	DUST CAP		
10.	800-044C	SNAP RING EXT 1 1/2 SHAFT		
11.	811-204C	CP 3/4FORB QD BH		
12.	802-147C	HHCS 3/8-16X3 1/2 GR5		
13.	804-013C	WASHER LOCK SPRING 3/8 PLT		
14.	803-014C	NUT HEX 3/8-16 PLT		

Fan Hydraulics

(Applies to YP40 only)

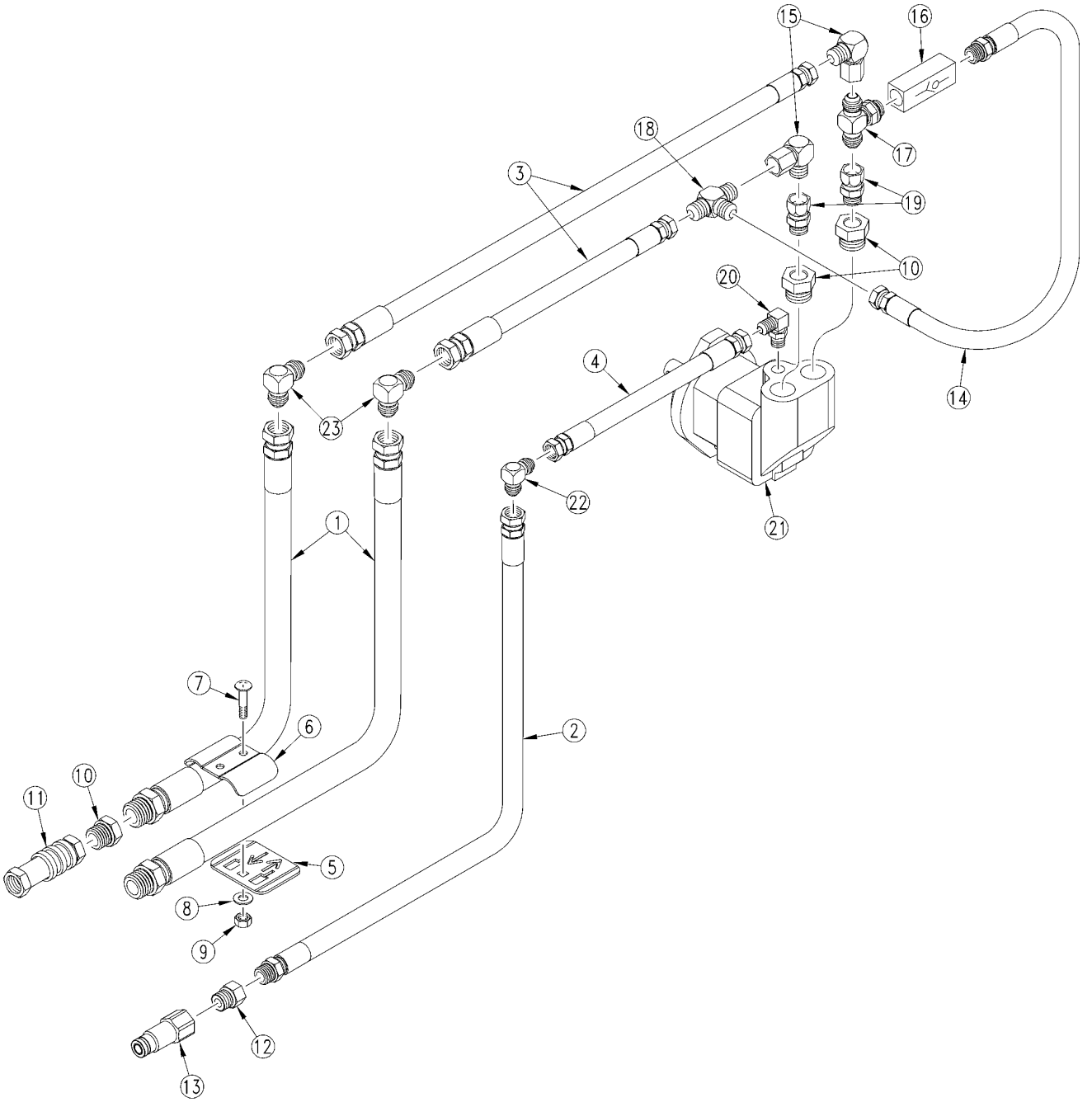

29241

Fan Hydraulics

(Applies to YP40 only)

Ref.	Part No.	Part Description	Comments	Revision
	dwg29241	Image No.		
1.	841-163C	HH1/2R2 365 3/4MORB 3/4FJIC		
2.	841-318C	HH1/4R2 364 9/16FJIC 9/16MORB		
3.	811-665C	HH1/2R2 208 3/4FJIC		
4.	841-073C	HH1/4R2 220 9/16FJIC		
5.	502-067D	HYD HOSE CLAMP LABEL		
6.	502-068D	HYD HOSE CLAMP BRACKET		
7.	802-009C	RHSNB 5/16-18X1 1/4 GR5		
8.	804-010C	WASHER FLAT 5/16 USS PLT		
9.	803-199C	NUT HEX FLANGE 5/16-18 PLT		
10.	841-002C	AD 1 1/16MORB 3/4FORB		
11.	811-069C	CP 1 1/16FORB QD		
12.	841-103C	AD 3/4MORB 9/16FORB		
13.	841-099C	CP 3/4FORB QD FLATFACE		
14.	811-782C	HH1/2R1 024 3/4FJIC 3/4MORB		
15.	811-150C	EL 3/4FJIC 3/4MJIC		
16.	810-037C	VALVE LINE CHECK		
17.	811-077C	TE 3/4MORB 3/4MJIC 3/4MJIC		
18.	811-078C	TE 3/4MJIC		
19.	811-324C	AD 3/4MORB 3/4FJIC		
20.	811-065C	EL 9/16MJIC 9/16MORB		
21.	810-556C	PARKER F-11 FAN MOTOR		
22.	811-393C	EL 9/16MJIC		
23.	811-725C	EL 90 3/4MJIC		

Hydraulic Hose Grips

(Applies to YP40 only)

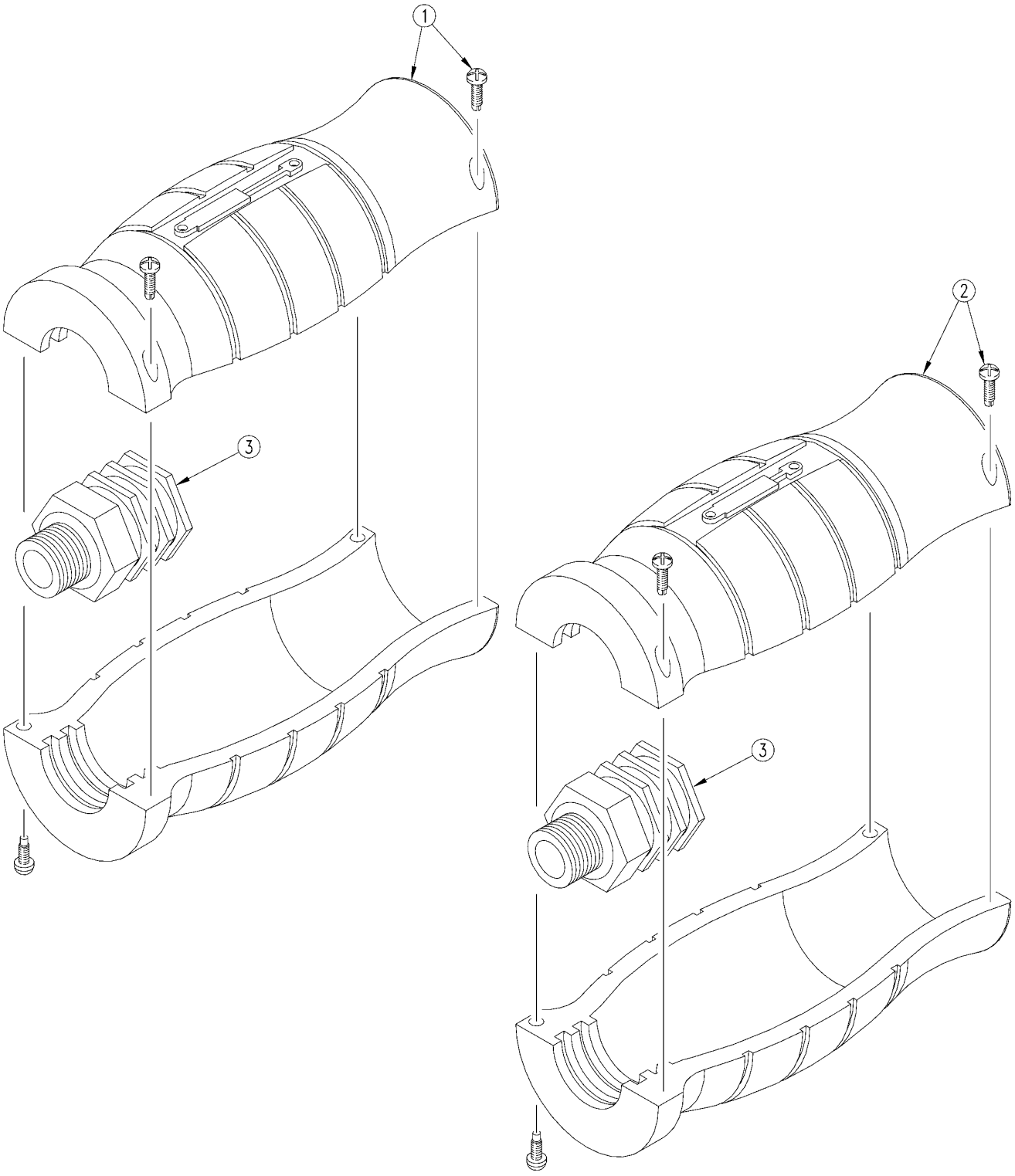

31842

Hydraulic Hose Grips

(Applies to YP40 only)

Ref.	Part No.	Part Description	Comments	Revision
	dwg31842	Image No.		
1.	811-826C	HG HANDLE - BLACK EXT	Used on frame lift cylinders.	
1.	811-914C	HG HANDLE - RED EXT	Used on hydraulic level	
1.	811-915C	HG HANDLE - GREEN EXT	Used on wing fold cylinders	
1.	811-917C	HG HANDLE - YELLOW EXT	Used on Hydraulic Drive.	
1.	841-540C	HG HANDLE - GRAY EXT	Used on fold cylinders.	
1.	841-542C	HG HANDLE - BLUE EXT	Used on cast roller depth control.	
2.	811-913C	HG HANDLE - BLACK RET	Used on frame lift cylinders.	
2.	811-827C	HG HANDLE - RED RET	Used on hydraulic level.	
2.	811-916C	HG HANDLE - GREEN RET	Used on wing fold cylinders.	
2.	811-918C	HG HANDLE - YELLOW RET	Used on Hydraulic Drive.	
2.	841-541C	HG HANDLE - GRAY RET	Used on fold cylinders.	
2.	841-543C	HG HANDLE - BLUE RET	Used on cast roller depth control	
3.	811-919C	AD 3/4MORB 3/4FORB (HG)		

Double Selector Valve (810-274C)

(Applies to YP40 only)

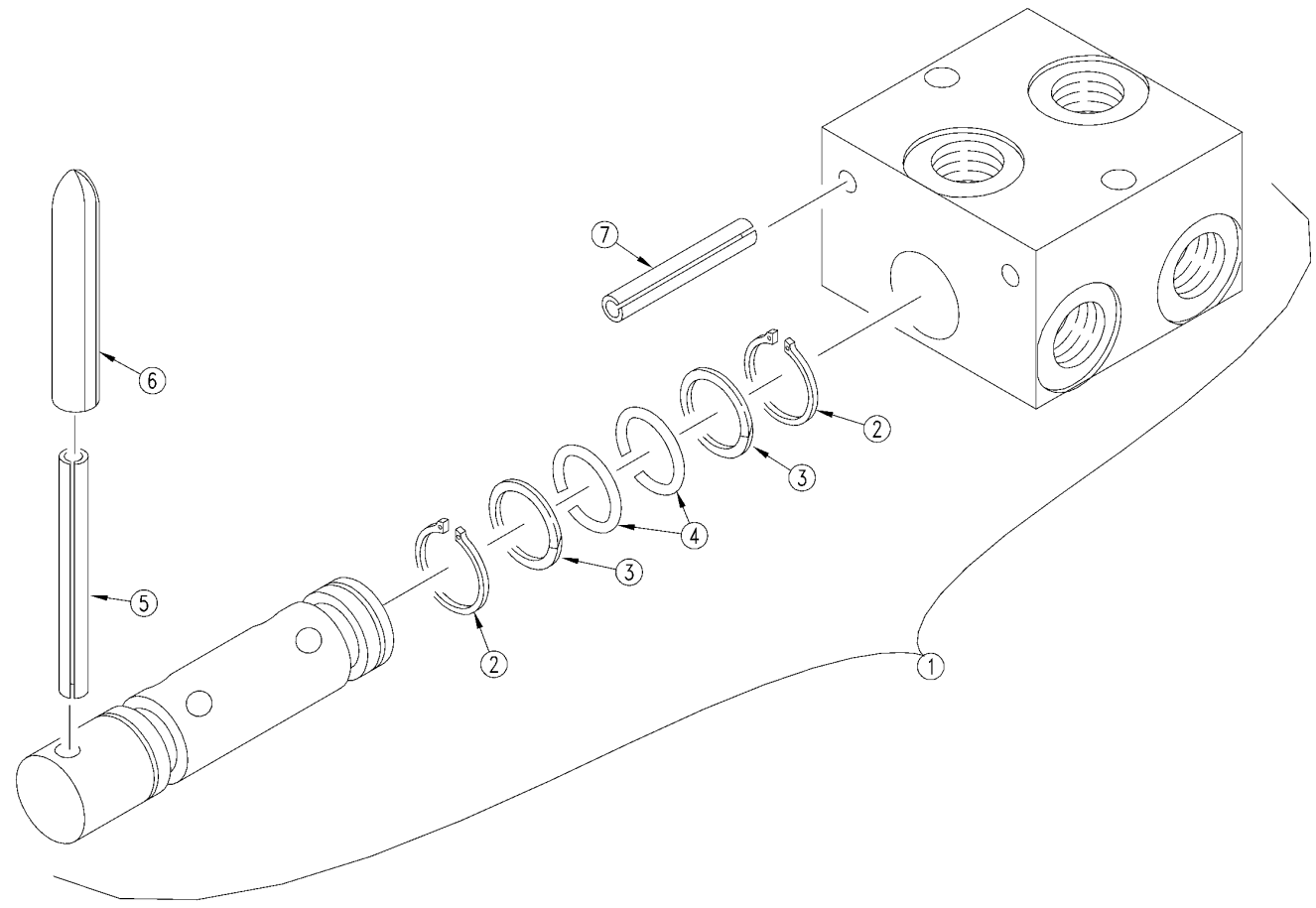

14927

Double Selector Valve (810-274C)

(Applies to YP40 only)

Ref.	Part No.	Part Description	Comments	Revision
	dwg14927	Image No.		
1.	810-274C	DOUBLE SELECTOR VALVE 3/4FORB		
2.	1079	RPBY SEAL KIT		
3.	1089-210	RPBY SEAL KIT 810-458C		
4.	1088-210	SHOEMAKER O-RING BUNA N 70DURO		
5.	1285	SH GROOVE PIN		
6.	817-255C	BLACK VINYL GRIP		
7.	1084	SH PIN, SPRING 0.25 DIAMETER		

Fasse 3 Way Multiplier (810-636C)

(Applies to YP40 only)

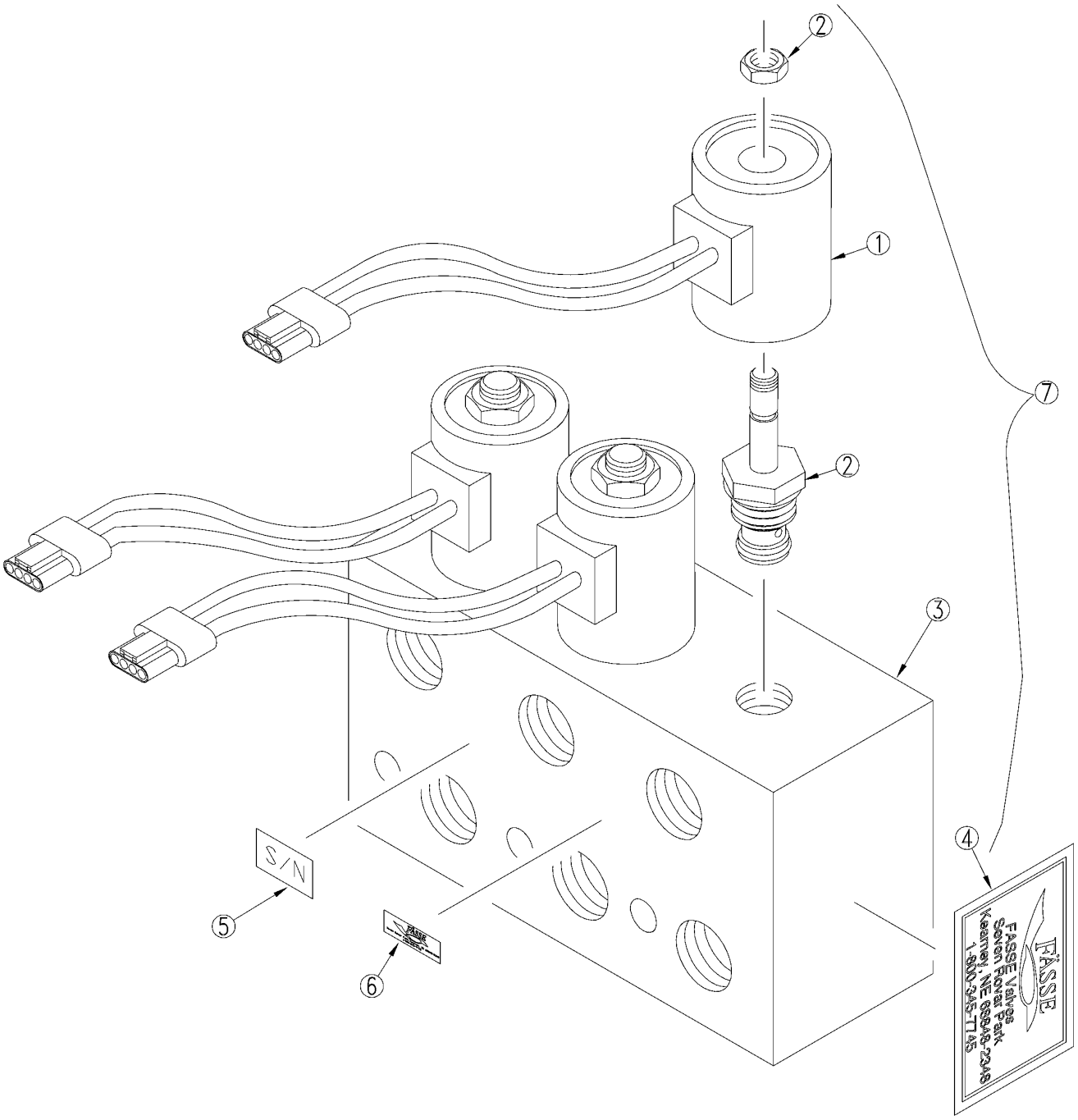

26166

Fasse 3 Way Multiplier (810-636C)

(Applies to YP40 only)

Ref.	Part No.	Part Description	Comments	Revision
	dwg25220	Image No.		
1.	253-028	COIL 6359412 DW		
2.	273-004	FASSE CART SV10-41-0-N-00		
3.	270-078	FASSE BLOCK M10972-1A 1513/SP		
4.	232-056	FASSE DECL GOLD/BLK 3 X 1.875		
5.	232-050	FASSE DECL S/N (SILVER)		
6.	232-059	FASSE DECL GOLD/BLK 1.5 X .5		
7.	810-636C	VALVE 3 WAY MULTIPLIER		

Sequence Valve (810-197C)

(Applies to YP40 only)

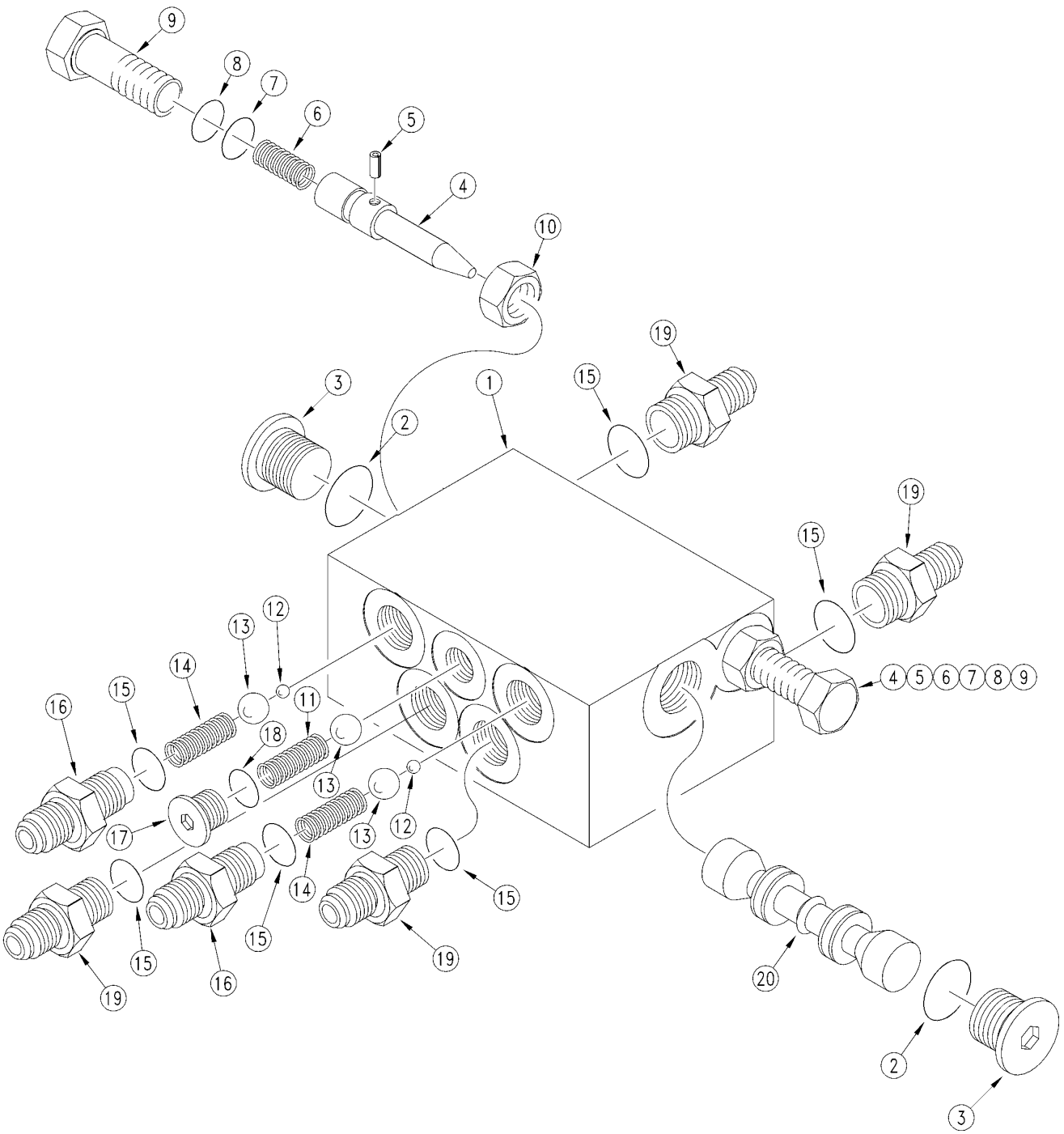

12024

Sequence Valve (810-197C)

(Applies to YP40 only)

Ref.	Part No.	Part Description	Comments	Revision
	dwg12024	Image No.		
1.	3089	SHOEMAKER BODY MKR SEQ VALVE		
2.	1088-908	SHOEMAKER O-RING		
3.	1132-08	SHOEMAKER PLUG, HEX SOCKET		
4.	1179	SHOEMAKER NEEDLE,FLOW CONTROL		
5.	1217	SHOEMAKER .125 SPRING PIN		
6.	1211	SHOEMAKER SPRING COMPRESSION		
7.	1088-011	RPBY 1100-011		
8.	1089-011	RPBY SEAL KIT		
9.	1180	SHOEMAKER SCREW, FLOW CON.ADJ.		
10.	1218	SHOEMAKER HEX, JAM NUT Z PLTD.		
11.	1099	RPBY SEAL KIT		
12.	1087-250	RPBY SEAL KIT		
13.	1087-437	RPBY SEAL KIT		
14.	1042	RPBY SEAL KIT		
15.	1088-906	SHOEMAKER O-RING		
16.	1182	SHOEMAKER FITTING PORT ADPT.		
17.	1132-05	SHOEMAKER HEX,SKT O-RING PLUG		
18.	1088-905	SHOEMAKER O-RING		
19.	1092-6-6	SHOEMAKER SAE #6 TO #6 STRGHT		
20.	2153	SHOEMAKER SPOOL,MKR SEQ. .055		
	810-456C	SEAL KIT SHOEMAKER #1223		

Hydraulic Cylinder 3.0 x 24.0 x 1.5 Rod (810-423C)

(Applies to YP40 only)

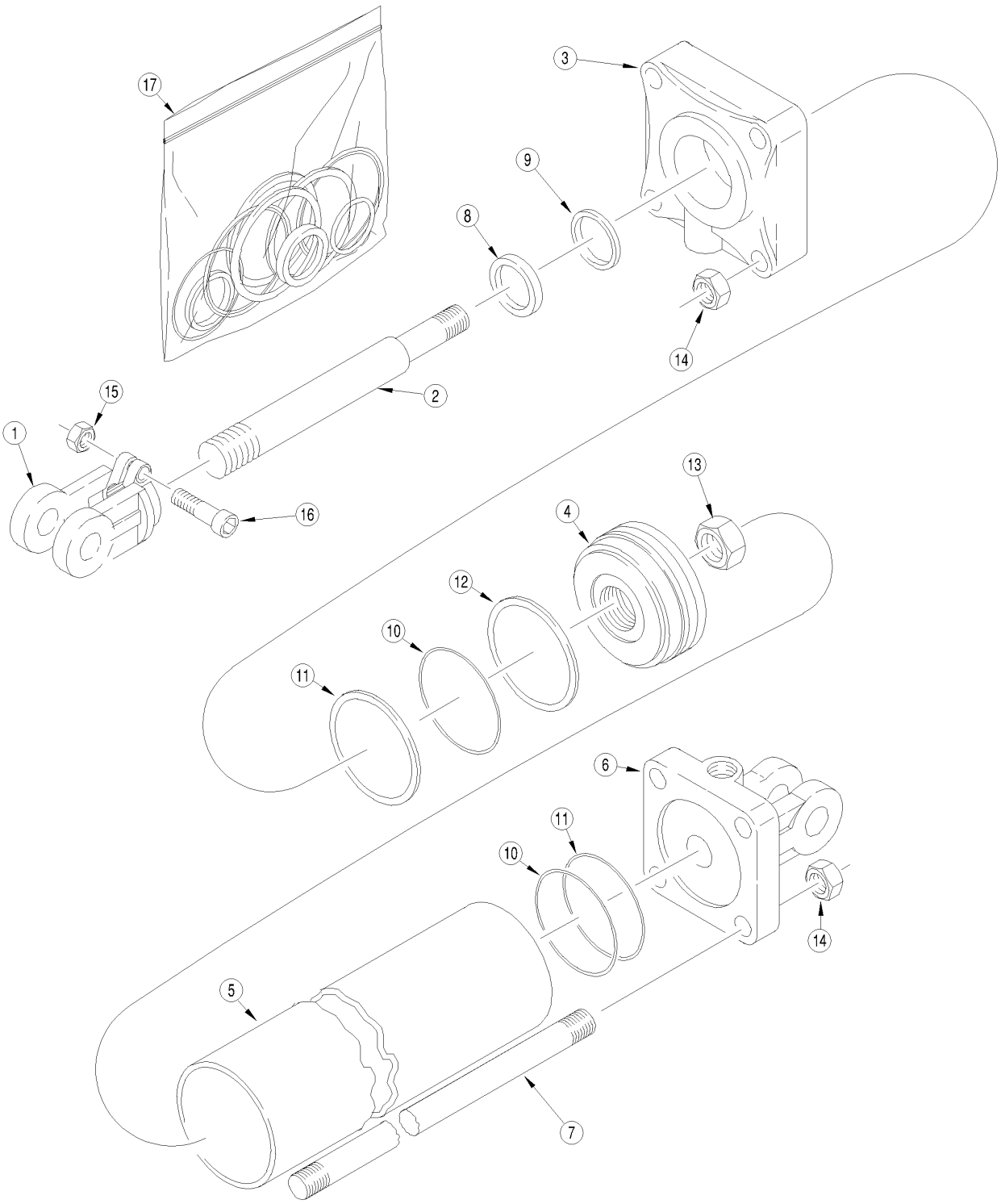

18964

Hydraulic Cylinder 3.0 x 24.0 x 1.5 Rod (810-423C)

(Applies to YP40 only)

Ref.	Part No.	Part Description	Comments	Revision
	dwg18964	Image No.		
1.	1M7016	CLEVIS ROD MIDWAY		
2.	2M4532	MW ROD		
3.	3R1510	MW HEAD		
4.	4M4108	MW PISTON		
5.	5M4132	MW TUBE		
6.	6R1144	BASE MIDWAY		
7.	7M4332	MW TIE ROD		
8.		MW WIPER	Only found in seal kit 17	
9.		MW U-CUP	Only found in seal kit 17	
10.		MW O-RING	Only found in seal kit 17	
11.		MW BACKUP	Only found in seal kit 17	
12.		MW CROWN SEAL	Only found in seal kit 17	
13.	2A0024	MW PISTON NUT 1-14		
14.	2A0014	MW TIE ROD NUT		
15.	2A0012	RPBY 803-234C		
16.	2A0006	RPBY 802-023C		
17.	810-430C	SEAL KIT MW 3 CYL 5A4106		

Hydraulic Cylinder (810-496C) 5.0 x 16.0 x 1.5 Rod

(Applies to YP40 only)

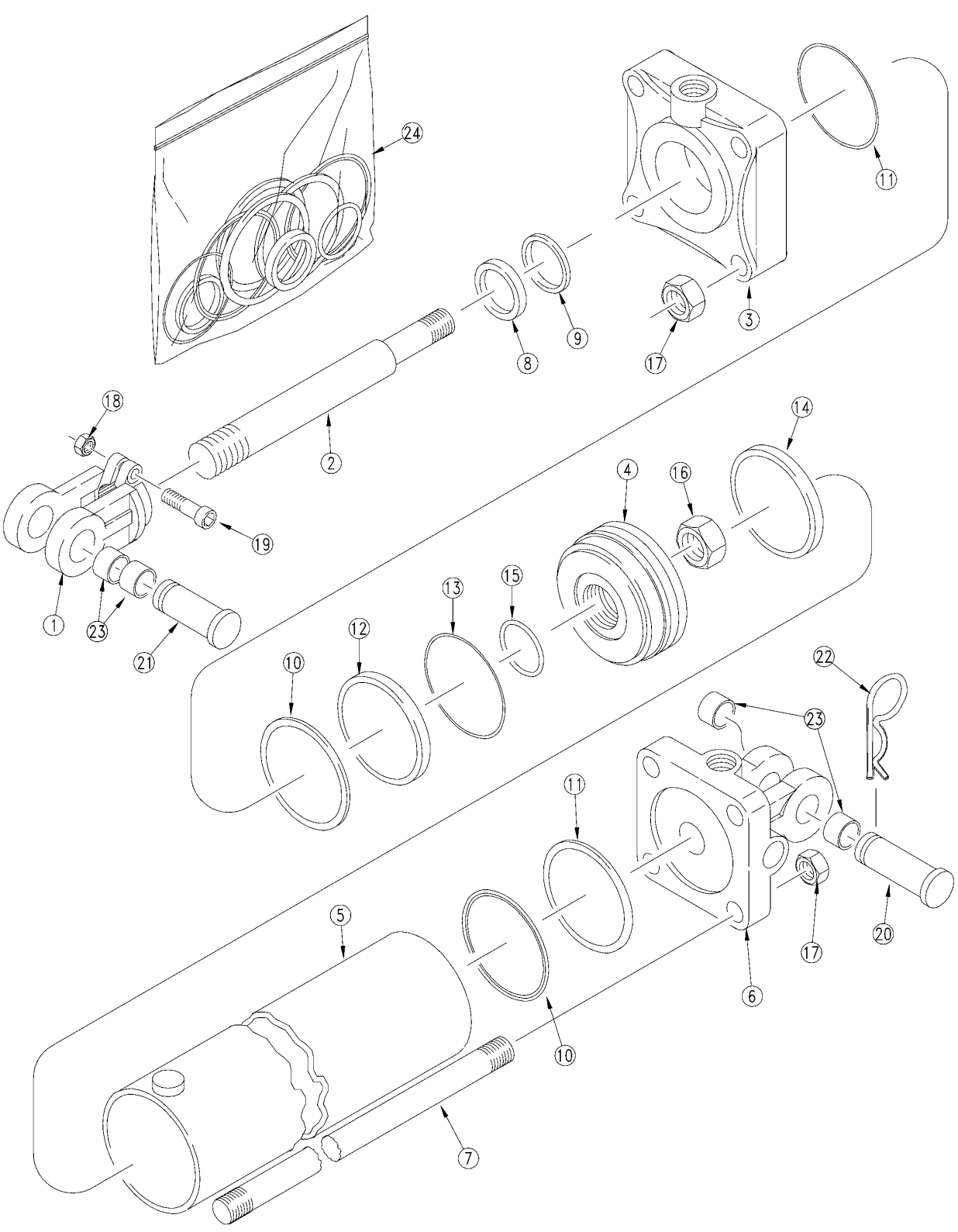

20297

Hydraulic Cylinder (810-496C) 5.0 x 16.0 x 1.5 Rod

(Applies to YP40 only)

Ref.	Part No.	Part Description	Comments	Revision
	dwg20297	Image No.		
1.	1M7028	MIDWAY CLEVIS		
2.	2S8522	ROD MIDWAY		
3.	3R9512	MIDWAY HEAD		
4.	4R9108	PISTON MIDWAY		
5.	5R9124	TUBE MIDWAY		
6.	6R9171	BASE MIDWAY		
7.	7M8324	TIE ROD MIDWAY		
8.		MW WIPER	Only available in item 24	
9.		U-CUP	Only available in item 24	
10.		O-RING	Only available in item 24	
11.		MW BACK UP	Only available in item 24	
12.		SEAL, TEFLON MIDWAY	Only available in item 24	
13.		O-RING LOADER MIDWAY	Only available in item 24	
14.		WEAR RING MIDWAY	Only available in item 24	
15.		MW O-RING	Only available in item 24	
16.	2A0025	MW PISTON NUT 1 1/4"-12 UNF		
17.	2A0019	RPBY 803-257C		
18.	2A0012	RPBY 803-234C		
19.	802-023C	HHCS 3/8-16X1 3/4 GR5		
20.	2A0218	CLEVIS PIN MIDWAY		
21.	2A0215	CLEVIS PIN MIDWAY		
22.	2A0132	MW PIN CLIP		
23.	890-620C	BUSHING,1 1/2X1 1/4X3/4LG		
24.	810-507C	SEAL KIT MW (4A9104)		

Hydraulic Cylinder (810-497C 4.75x16x1.5 Rod)

(Applies to YP40 only)

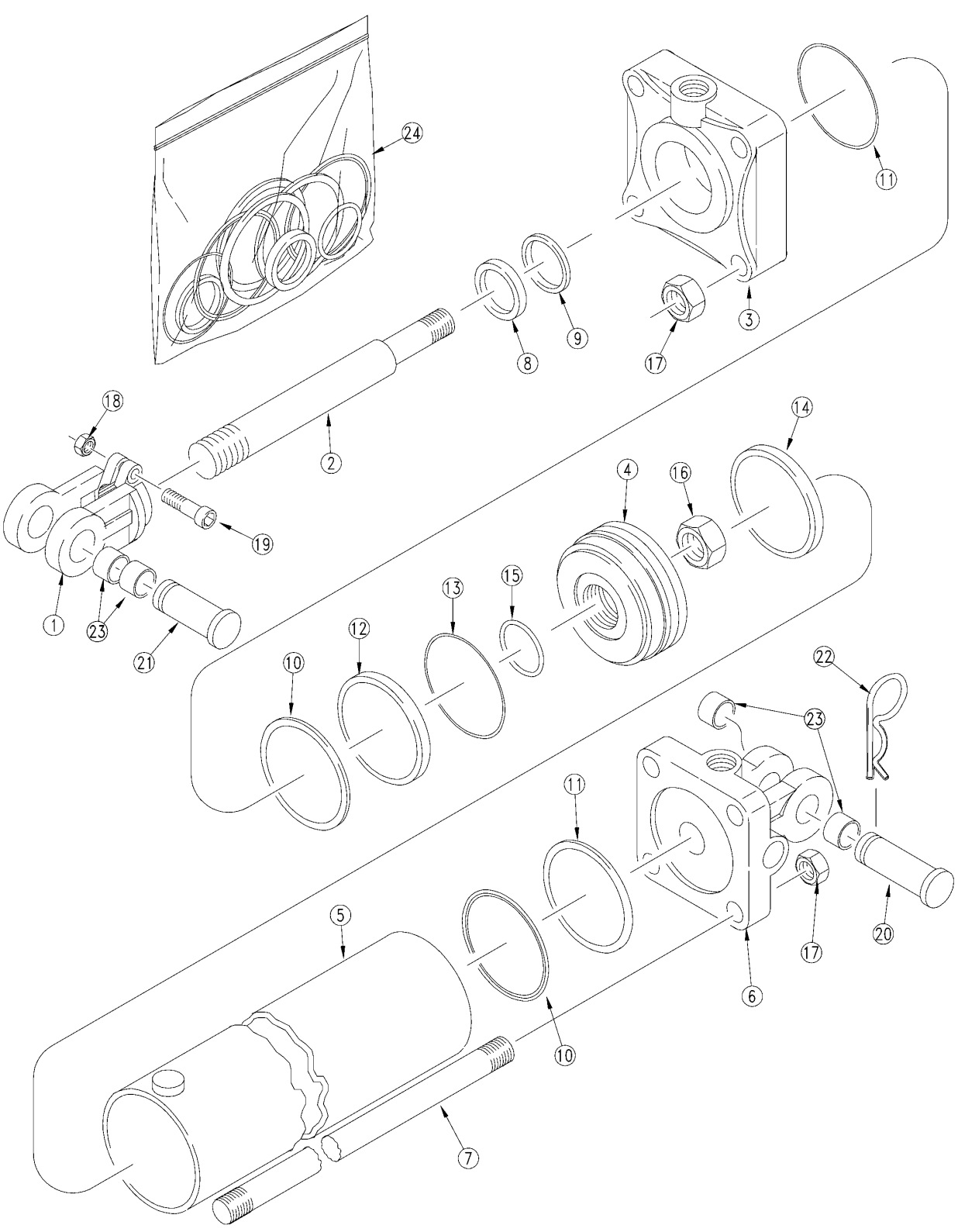

20297

Hydraulic Cylinder (810-497C 4.75x16x1.5 Rod)

(Applies to YP40 only)

Ref.	Part No.	Part Description	Comments	Revision
	dwg20297	Image No.		
1.	1M7028	MIDWAY CLEVIS		
2.	2S8522	ROD MIDWAY		
3.	3R8512	MIDWAY HEAD F/ 4 3/4 CYL		
4.	4R8108	PISTON MIDWAY		
5.	5R8124	TUBE MIDWAY		
6.	6R8171	BASE MIDWAY		
7.	7M8324	TIE ROD MIDWAY		
8.		MW WIPER	Only available in item 24	
9.		U-CUP	Only available in item 24	
10.		O-RING MIDWAY	Only available in item 24	
11.		MW BACK UP	Only available in item 24	
12.		SEAL, TEFLON MIDWAY	Only available in item 24	
13.		O-RING LOADER MIDWAY	Only available in item 24	
14.		WEAR RING MIDWAY	Only available in item 24	
15.		MW O-RING	Only available in item 24	
16.	2A0025	MW PISTON NUT 1 1/4"'-12 UNF		
17.	2A0019	RPBY 803-257C		
18.	2A0012	RPBY 803-234C		
19.	802-023C	HHCS 3/8-16X1 3/4 GR5		
20.	2A0218	CLEVIS PIN MIDWAY		
21.	2A0215	CLEVIS PIN MIDWAY		
22.	2A0132	MW PIN CLIP		
23.	890-620C	BUSHING,1 1/2X1 1/4X3/4LG		
24.	810-160C	SEAL KIT MW 4.75 RPHCYL 4A8104		

Hydraulic Cylinder 1.5 x 2.5 x .75 Rod (810-555C)

(Applies to YP40 only)

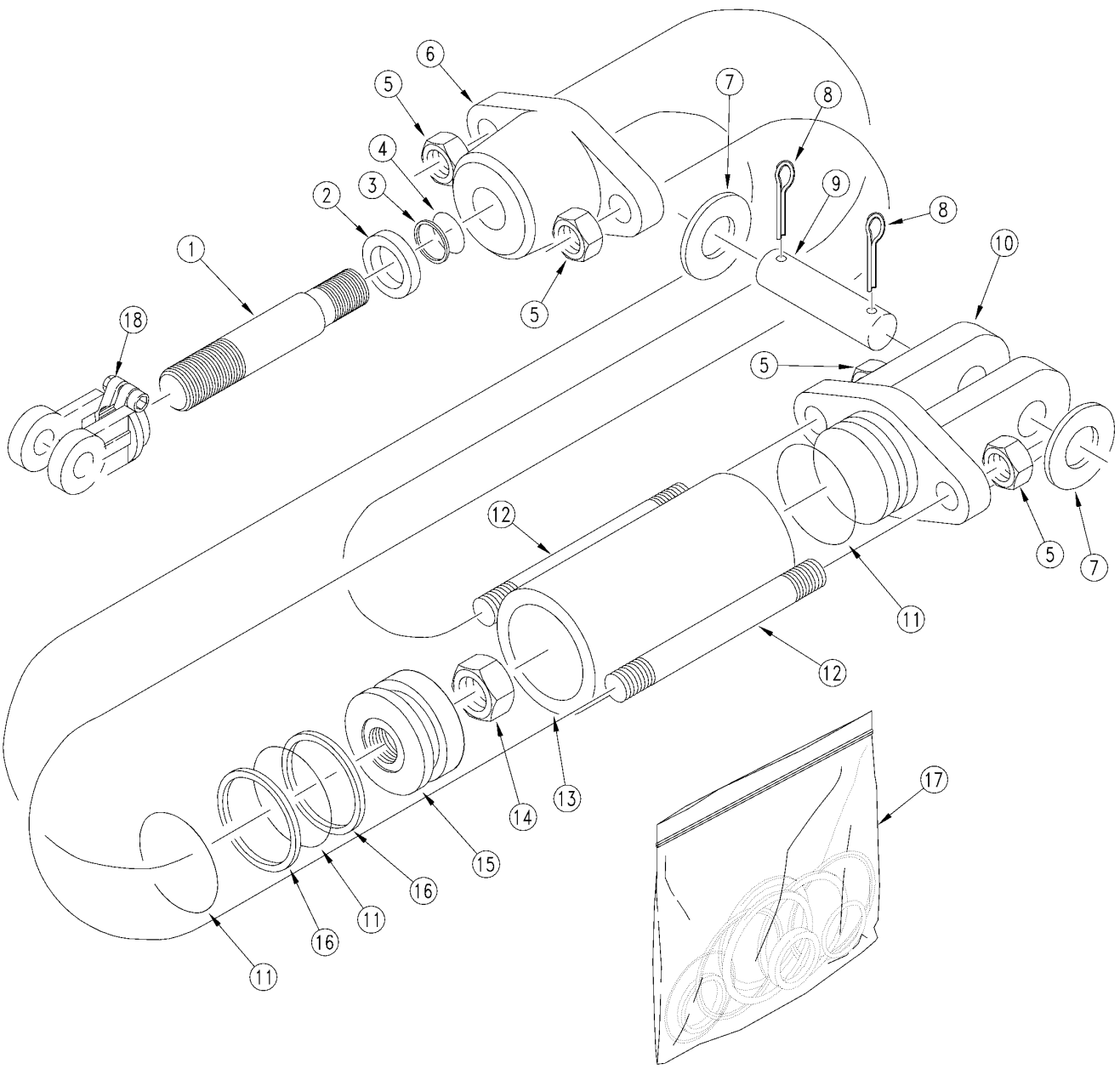

25225

Hydraulic Cylinder 1.5 x 2.5 x .75 Rod (810-555C)

(Applies to YP40 only)

Ref.	Part No.	Part Description	Comments	Revision
	dwg12822	Image No.		
1.	2M1190	MW ROD		
2.		WIPER SEAL	Only available in item 17	
3.		BACKUP	Only available in item 17	
4.		O-RING	Only available in item 17	
5.	2A0014	MW TIE ROD NUT		
6.	3M1108	MW HEAD		
7.	804-021C	WASHER FLAT 5/8 SAE PLT		
8.	2A0130	MW COTTER PIN		
9.	2A0202	MW CLEVIS PIN		
10.	6M1108	MW BASE		
11.		O-RING	Only available in item 17	
12.	7M1302	MW TIE ROD		
13.	5M1103	MW TUBE		
14.	2A0018	MW TIE ROD NUT		
15.	4M1102	MW PISTON		
16.		BACKUP	Only available in item 17	
17.	810-249C	SEAL KIT MW 3A1102		
18.	810-491C	MIDWAY ROD CLEVIS 3/4-16 UNF		

Hydraulic Cylinder (810-606C - 810-674C 4x24x1.5 Rod)

(Applies to YP40 only)

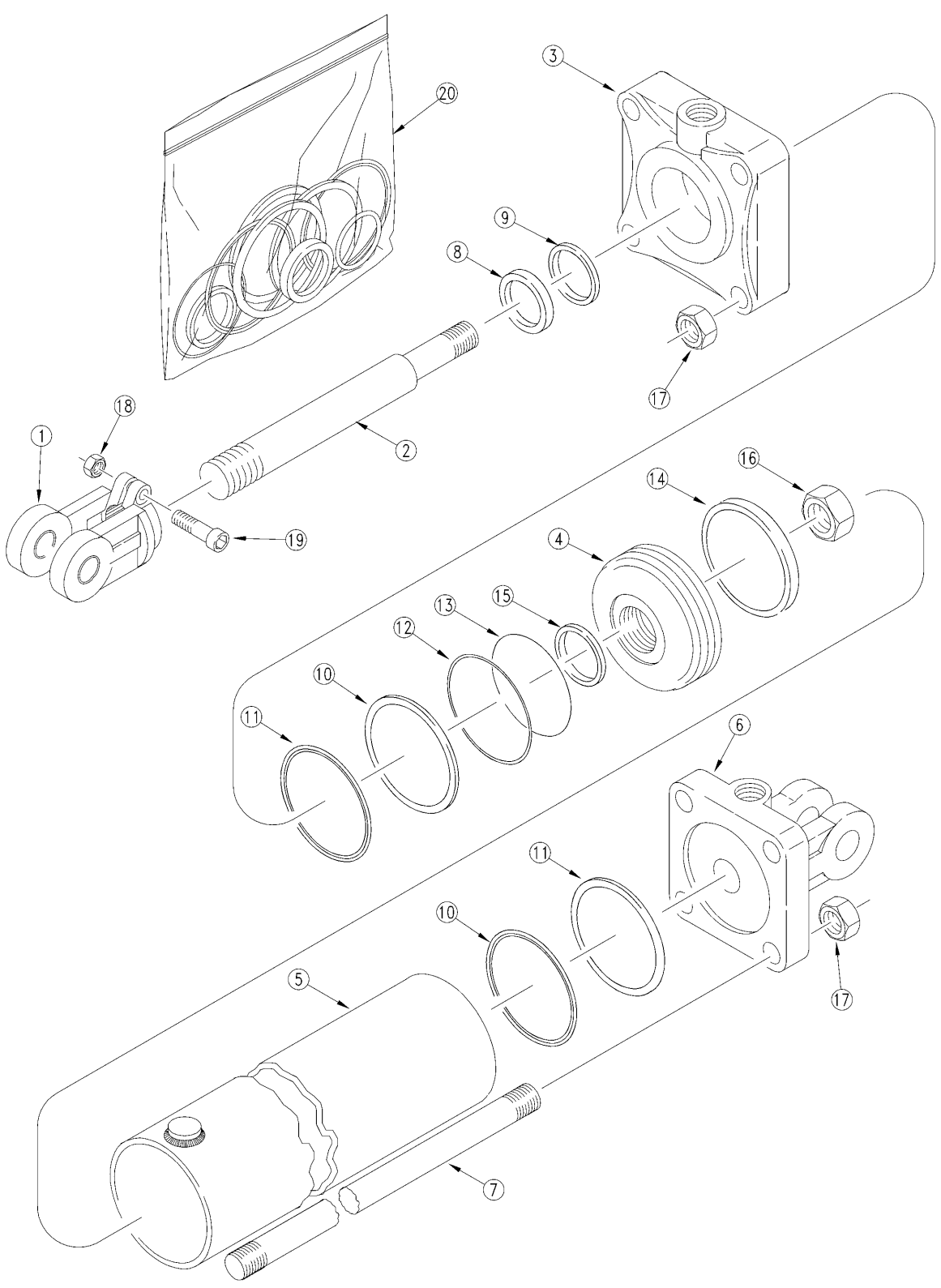

25222

Hydraulic Cylinder (810-606C - 810-674C 4x24x1.5 Rod)

(Applies to YP40 only)

Ref.	Part No.	Part Description	Comments	Revision
	dwg25222	Image No.		
1.	1M7021-ADI	MW ROD CLEVIS 1.00PN 1.5-12THD		
2.	2S6593NC	MIDWAY ROD		
3.	3R5412	MIDWAY HEAD		
4.	4R5109	PISTON MIDWAY		
5.	5R5132	MW TUBE		
6.	6R5164-ADI	MIDWAY ADI BASE		
7.	7M6332	MW TIE ROD 4 X 24 CYLINDER		
8.		MW WIPER	Only available in item 20	
9.		U-CUP	Only available in item 20	
10.		BACK UP MIDWAY	Only available in item 20	
11.		BACK UP MIDWAY	Only available in item 20	
12.		TEFLON SEAL	Only available in item 20	
13.		O-RING LOADER MIDWAY	Only available in item 20	
14.		WEAR RING MIDWAY	Only available in item 20	
15.		MW PISTON NUT SEAL	Only available in item 20	
16.	2A0024	MW PISTON NUT 1-14		
17.	2A0018	MW TIE ROD NUT		
18.	2A0012	RPBY 803-234C		
19.	802-023C	HHCS 3/8-16X1 3/4 GR5		
20.	810-533C	SEAL KIT 4A5104 MW 4X1.5 REP		

Hydraulic Cylinder (810-607C - 810-675C 4.25x24x1.5 Rod)

(Applies to YP40 only)

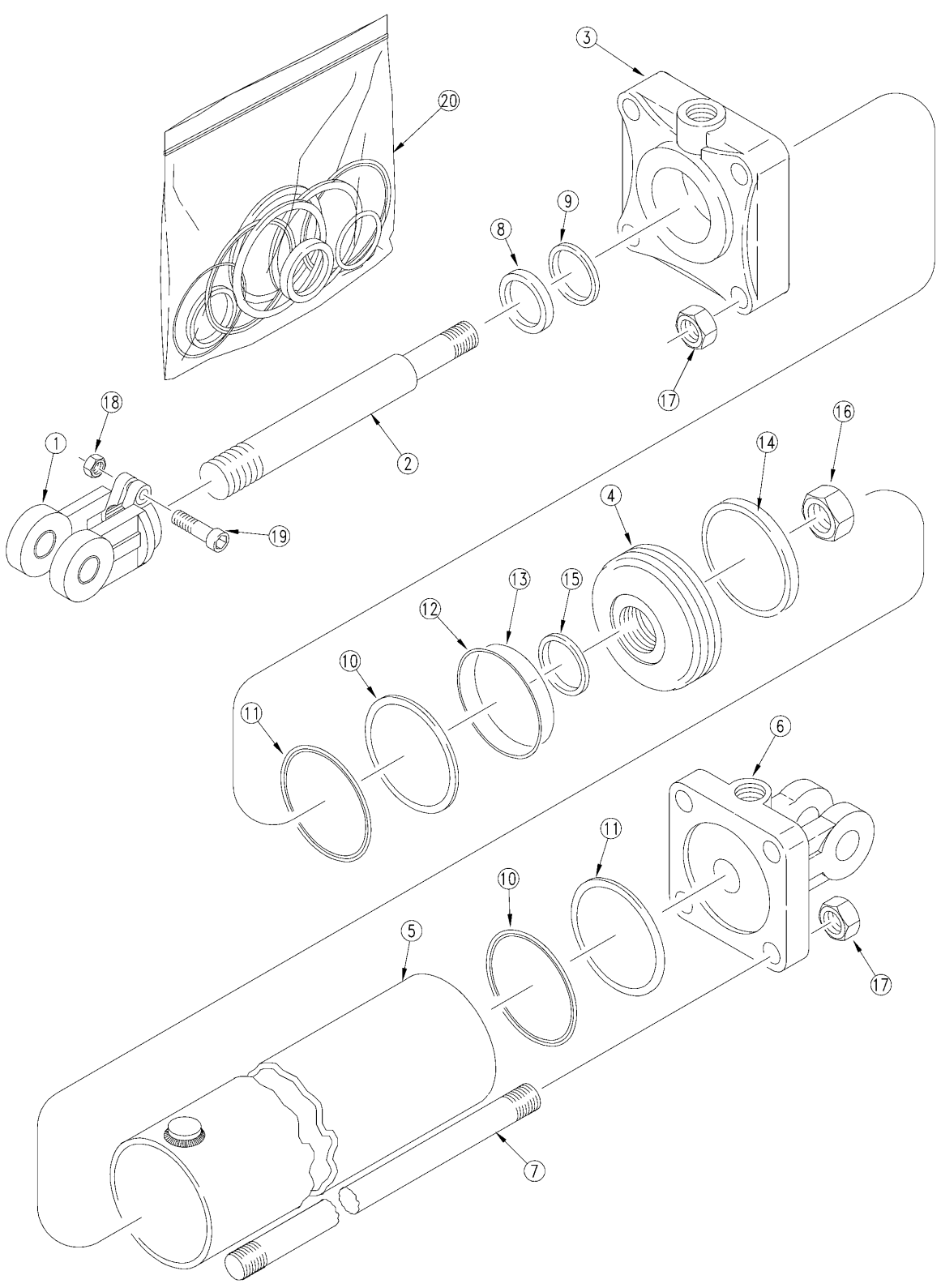

25221

Hydraulic Cylinder (810-607C - 810-675C 4.25x24x1.5 Rod)

(Applies to YP40 only)

Ref.	Part No.	Part Description	Comments	Revision
	dwg25221	Image No.		
1.	1M7021-ADI	MW ROD CLEVIS 1.00PN 1.5-12THD		
2.	2S7532	MIDWAY ROD		
3.	3R6912	HEAD MIDWAY		
4.	4R6109	PISTON MIDWAY		
5.	5R6132	MW TUBE		
6.	6R6164-ADI	MIDWAY ADI BASE		
7.	7M7332	MW TIE ROD		
8.		MW WIPER	Only available in item 20	
9.		U-CUP	Only available in item 20	
10.		O-RING MIDWAY	Only available in item 20	
11.		BACK UP MIDWAY	Only available in item 20	
12.		TEFLON SEAL	Only available in item 20	
13.		O-RING LOADER MIDWAY	Only available in item 20	
14.		WEAR RING MIDWAY	Only available in item 20	
15.		MW PISTON NUT SEAL	Only available in item 20	
16.	2A0024	MW PISTON NUT 1-14		
17.	2A0019	RPBY 803-257C		
18.	2A0012	RPBY 803-234C		
19.	802-023C	HHCS 3/8-16X1 3/4 GR5		
20.	810-144C	SEAL KIT MW 4.25 RPHCYL 4A6104		

Hydraulic Cylinder (810-650C 5x14x1.5 Rod)

(Applies to YP40 only)

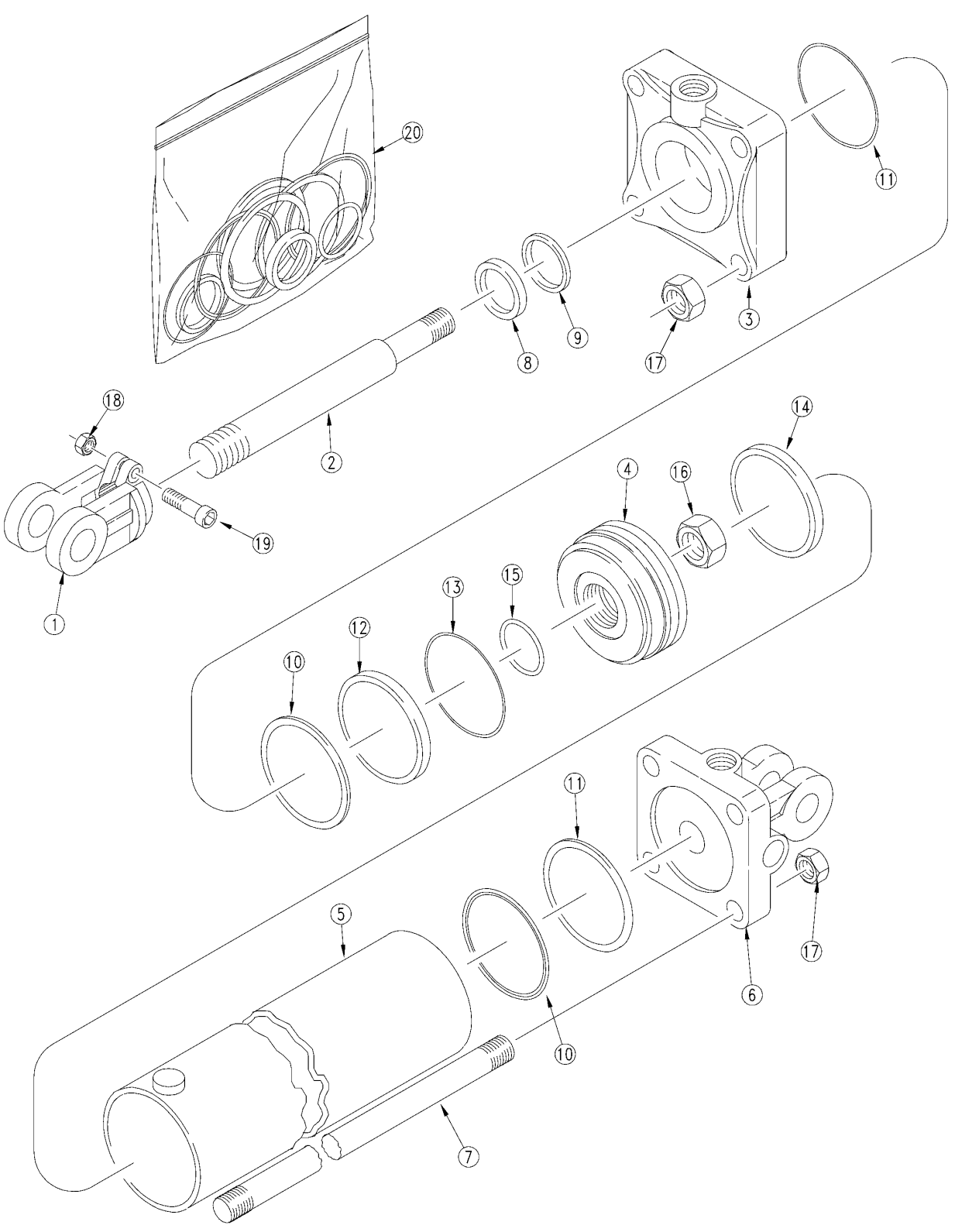

29273

Hydraulic Cylinder (810-650C 5x14x1.5 Rod)

(Applies to YP40 only)

Ref.	Part No.	Part Description	Comments	Revision
	dwg29273	Image No.		
1.	1M7022-ADI	MW ROD CLEVIS 1.25PN 1.5-12THD		
2.	2S8524NC	MIDWAY ROD		
3.	3R9512	MIDWAY HEAD		
4.	4R9110	PISTON MIDWAY		
5.	5R9122	MIDWAY TUBE		
6.	6R9170-ADI	MIDWAY ADI BASE		
7.	7M8322	MIDWAY TIE ROD		
8.		MW WIPER	Only available in item 20	
9.		U-CUP	Only available in item 20	
10.		O-RING	Only available in item 20	
11.		MW BACK UP	Only available in item 20	
12.		TEFLON SEAL	Only available in item 20	
13.		LOADER	Only available in item 20	
14.		WEAR RING	Only available in item 20	
15.		O-RING	Only available in item 20	
16.	2A0025	MW PISTON NUT 1 1/4"-12 UNF		
17.	803-257C	NUT HEX 3/4-16 PLAIN		
18.	803-234C	NUT HEX 3/8-16 PLAIN		
19.	802-023C	HHCS 3/8-16X1 3/4 GR5		
20.	810-507C	SEAL KIT MW (4A9104)		

Hydraulic Cylinder (810-651C 4.75x14x1.5 Rod)

(Applies to YP40 only)

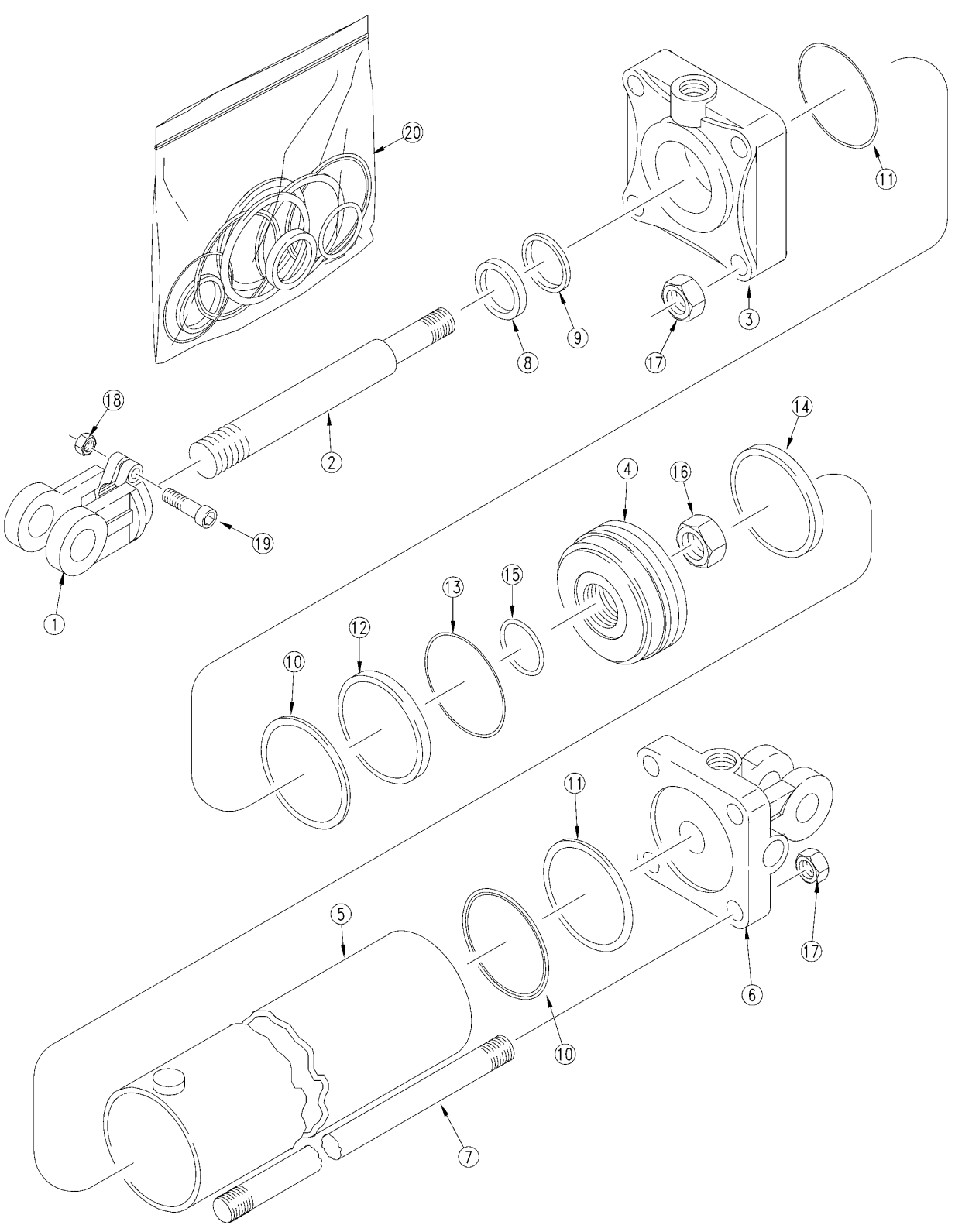

29274

Hydraulic Cylinder (810-651C 4.75x14x1.5 Rod)

(Applies to YP40 only)

Ref.	Part No.	Part Description	Comments	Revision
	dwg29274	Image No.		
1.	1M7022-ADI	MW ROD CLEVIS 1.25PN 1.5-12THD		
2.	2S8524NC	MIDWAY ROD		
3.	3R8512	MIDWAY HEAD F/ 4 3/4 CYL		
4.	4R8109	PISTON MIDWAY		
5.	5R8122	MIDWAY TUBE		
6.	6R8170-ADI	MIDWAY ADI BASE		
7.	7M8322	MIDWAY TIE ROD		
8.		MW WIPER	Only available in item 20	
9.		U-CUP	Only available in item 20	
10.		O-RING	Only available in item 20	
11.		MW BACK UP	Only available in item 20	
12.		TEFLON SEAL	Only available in item 20	
13.		LOADER	Only available in item 20	
14.		WEAR RING	Only available in item 20	
15.		O-RING	Only available in item 20	
16.	2A0025	MW PISTON NUT 1 1/4"-12 UNF		
17.	803-257C	NUT HEX 3/4-16 PLAIN		
18.	803-234C	NUT HEX 3/8-16 PLAIN		
19.	802-023C	HHCS 3/8-16X1 3/4 GR5		
20.	810-160C	SEAL KIT MW 4.75 RPHCYL 4A8104		

Hydraulic Cylinder (810-744C 5x16x2 Rod)

(Applies to YP40 only)

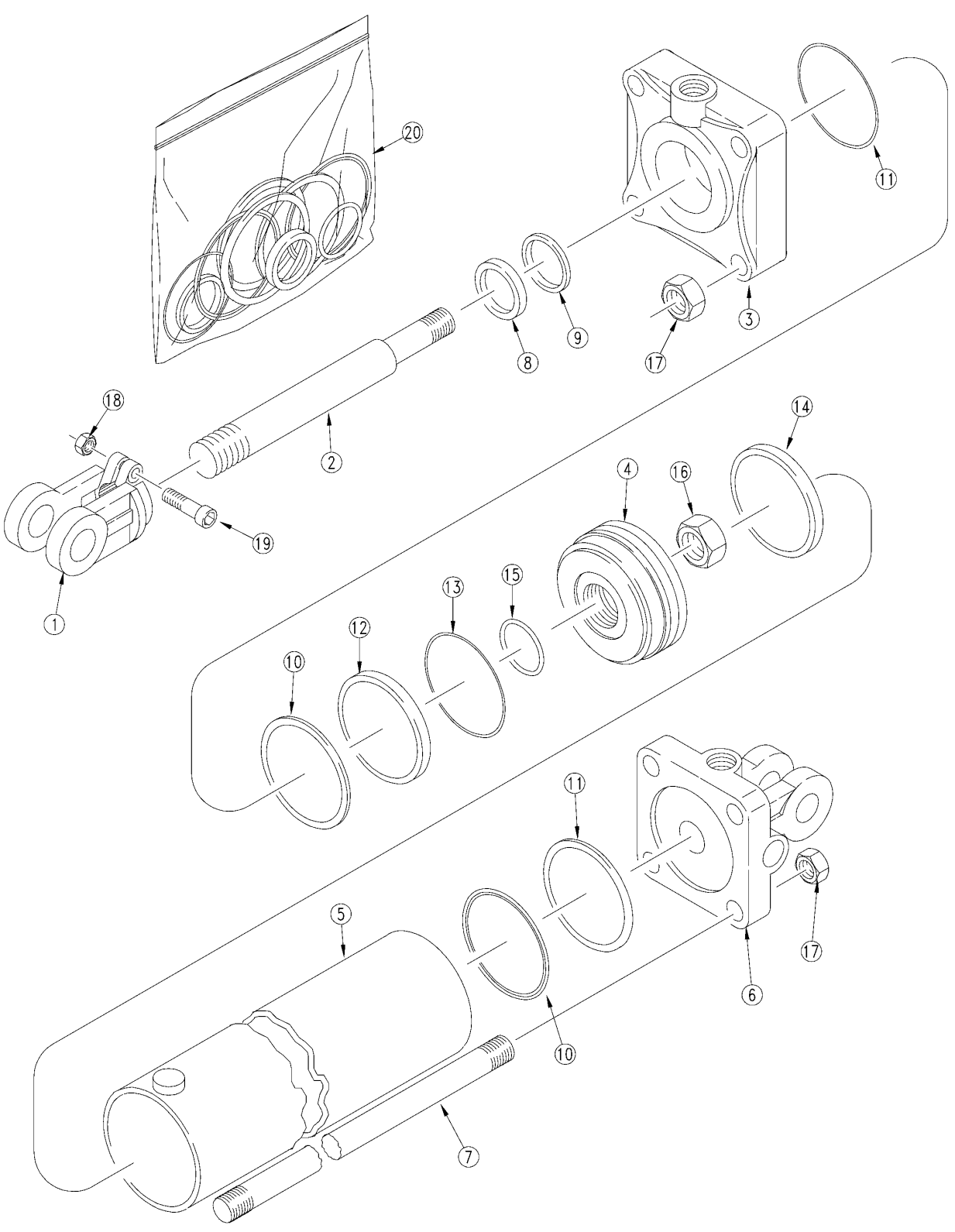

32773

Hydraulic Cylinder (810-744C 5x16x2 Rod)

(Applies to YP40 only)

Ref.	Part No.	Part Description	Comments	Revision
	dwg32773	Image No.		
1.	1M7022-ADI	MW ROD CLEVIS 1.25PN 1.5-12THD		
2.	2S8620NC	MW ROD		
3.	3R9640	MW HEAD		
4.	4R9110	PISTON MIDWAY		
5.	5R9124	TUBE MIDWAY		
6.	6R9170-ADI	MIDWAY ADI BASE		
7.	7M8324	TIE ROD MIDWAY		
8.		MW WIPER	Only available in item 20	
9.		U-CUP	Only available in item 20	
10.		O-RING	Only available in item 20	
11.		MW BACK UP	Only available in item 20	
12.		TEFLON SEAL	Only available in item 20	
13.		LOADER	Only available in item 20	
14.		WEAR RING	Only available in item 20	
15.		O-RING	Only available in item 20	
16.	2A0025	MW PISTON NUT 1 1/4"-12 UNF		
17.	803-257C	NUT HEX 3/4-16 PLAIN		
18.	803-234C	NUT HEX 3/8-16 PLAIN		
19.	802-023C	HHCS 3/8-16X1 3/4 GR5		
20.	810-508C	SEAL KIT MW (4A9106)		

Hydraulic Cylinder (810-745C 4.5x16.38x1.5 Rod)

(Applies to YP40 only)

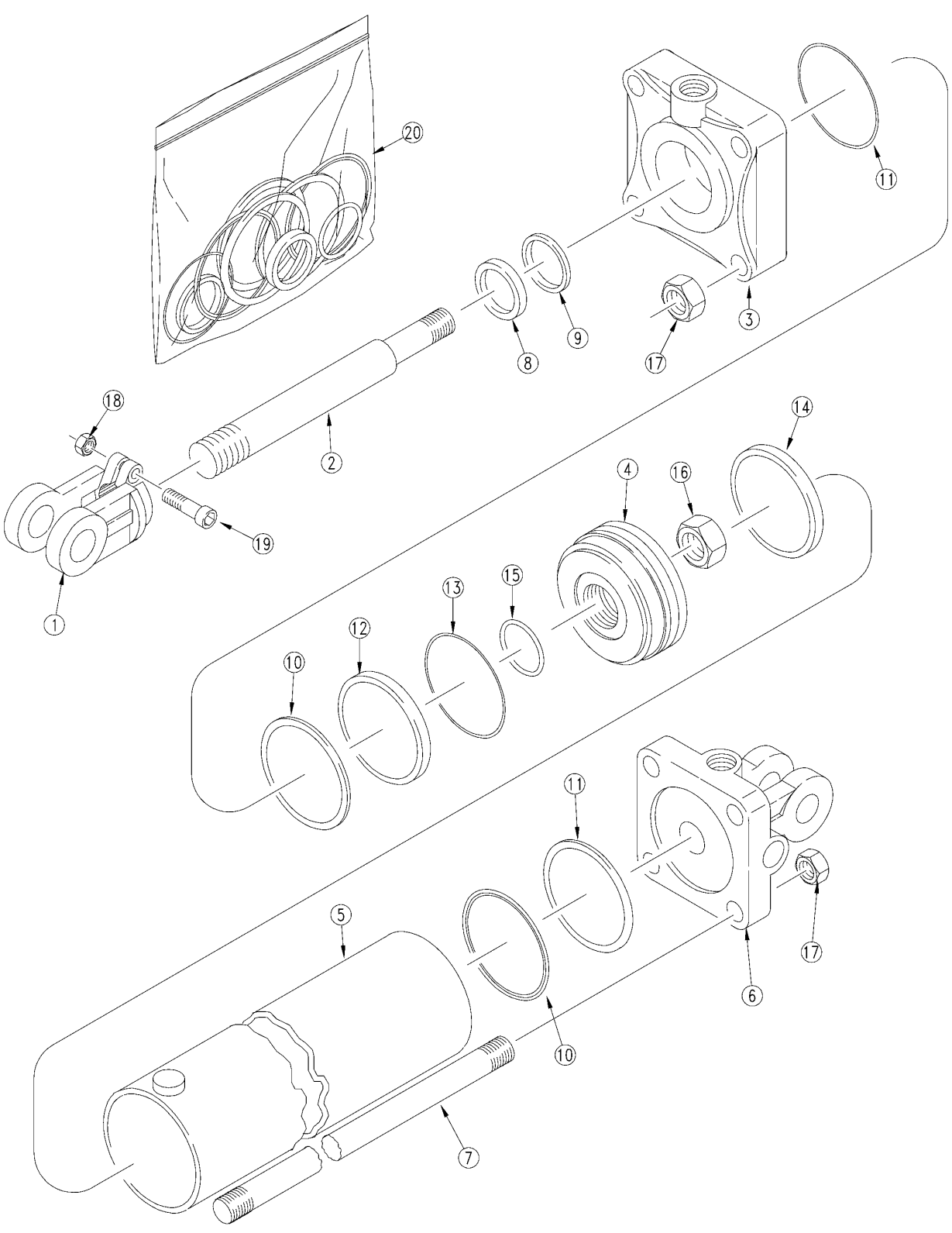

32799

Hydraulic Cylinder (810-745C 4.5x16.38x1.5 Rod)

(Applies to YP40 only)

Ref.	Part No.	Part Description	Comments	Revision
	dwg32799	Image No.		
1.	1M7022-ADI	MW ROD CLEVIS 1.25PN 1.5-12THD		
2.	2S7584NC	MW ROD		
3.	3R7540	MW HEAD		
4.	4R7113	PISTON MIDWAY		
5.	5R7195	MW TUBE		
6.	6R7190-ADI	MIDWAY ADI BASE		
7.	7M7427	MW TIE ROD		
8.		MW WIPER	Only available in item 20	
9.		U-CUP	Only available in item 20	
10.		O-RING	Only available in item 20	
11.		MW BACK UP	Only available in item 20	
12.		TEFLON SEAL	Only available in item 20	
13.		LOADER	Only available in item 20	
14.		WEAR RING	Only available in item 20	
15.		O-RING	Only available in item 20	
16.	2A0025	MW PISTON NUT 1 1/4"-12 UNF		
17.	803-257C	NUT HEX 3/4-16 PLAIN		
18.	803-234C	NUT HEX 3/8-16 PLAIN		
19.	802-023C	HHCS 3/8-16X1 3/4 GR5		
20.	810-158C	SEAL KIT MW 4.5 RPHCYL 4A7104		

Hydraulic Cylinder (810-833C 5x14x2 Rod)

(Applies to YP40 only)

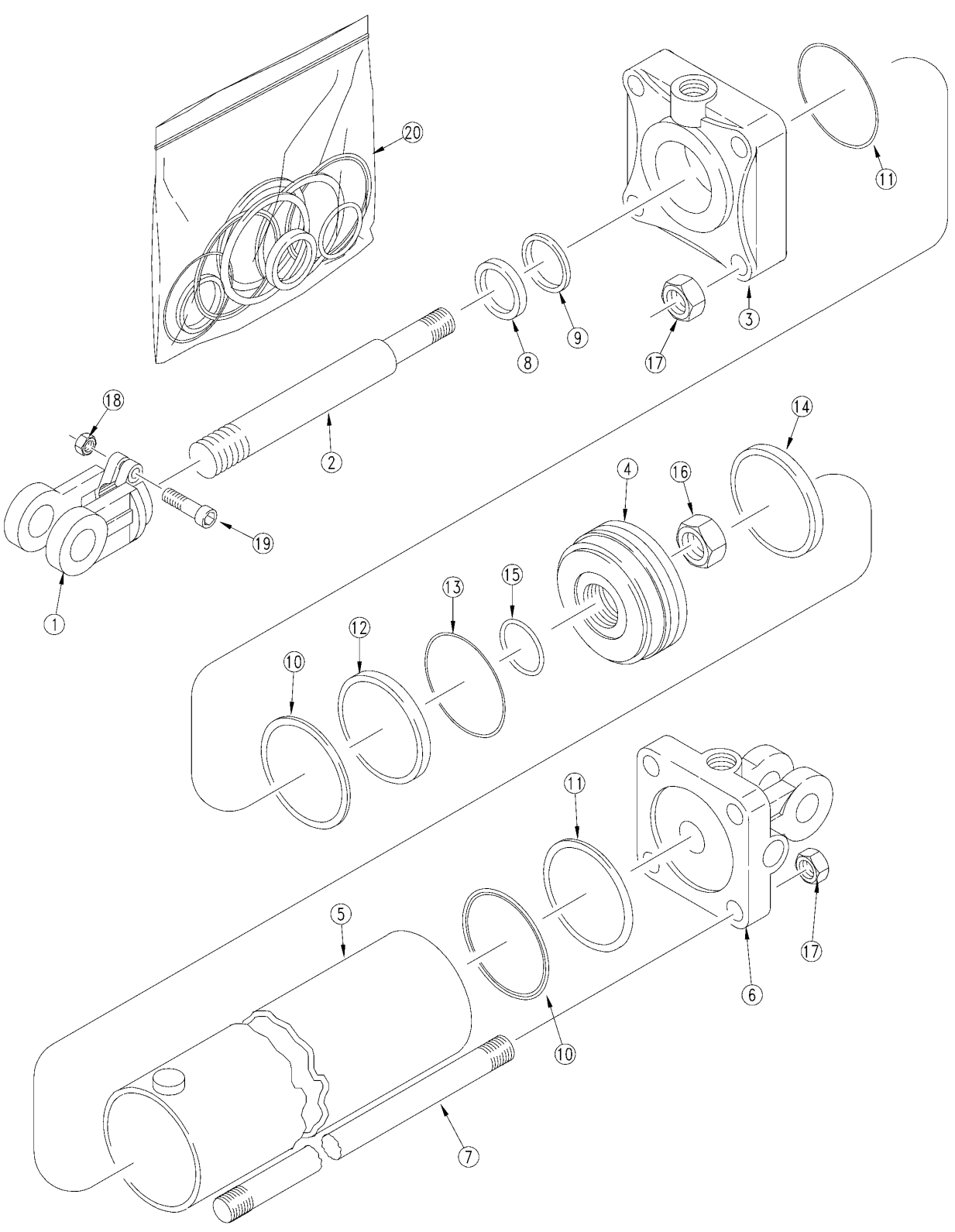

32804

Hydraulic Cylinder (810-833C 5x14x2 Rod)

(Applies to YP40 only)

Ref.	Part No.	Part Description	Comments	Revision
	dwg32804	Image No.		
1.	1M7022-ADI	MW ROD CLEVIS 1.25PN 1.5-12THD		
2.	2S8622NC	MW ROD		
3.	3R9640	MW HEAD		
4.	4R9110	PISTON MIDWAY		
5.	5R9122	MIDWAY TUBE		
6.	6R9170-ADI	MIDWAY ADI BASE		
7.	7M8322	MIDWAY TIE ROD		
8.		MW WIPER	Only available in item 20	
9.		U-CUP	Only available in item 20	
10.		O-RING	Only available in item 20	
11.		MW BACK UP	Only available in item 20	
12.		TEFLON SEAL	Only available in item 20	
13.		LOADER	Only available in item 20	
14.		WEAR RING	Only available in item 20	
15.		O-RING	Only available in item 20	
16.	2A0025	MW PISTON NUT 1 1/4"-12 UNF		
17.	803-257C	NUT HEX 3/4-16 PLAIN		
18.	803-234C	NUT HEX 3/8-16 PLAIN		
19.	802-023C	HHCS 3/8-16X1 3/4 GR5		
20.	810-508C	SEAL KIT MW (4A9106)		

Hydraulic Cylinder (810-834C 4.5x14.38x1.5 Rod)

(Applies to YP40 only)

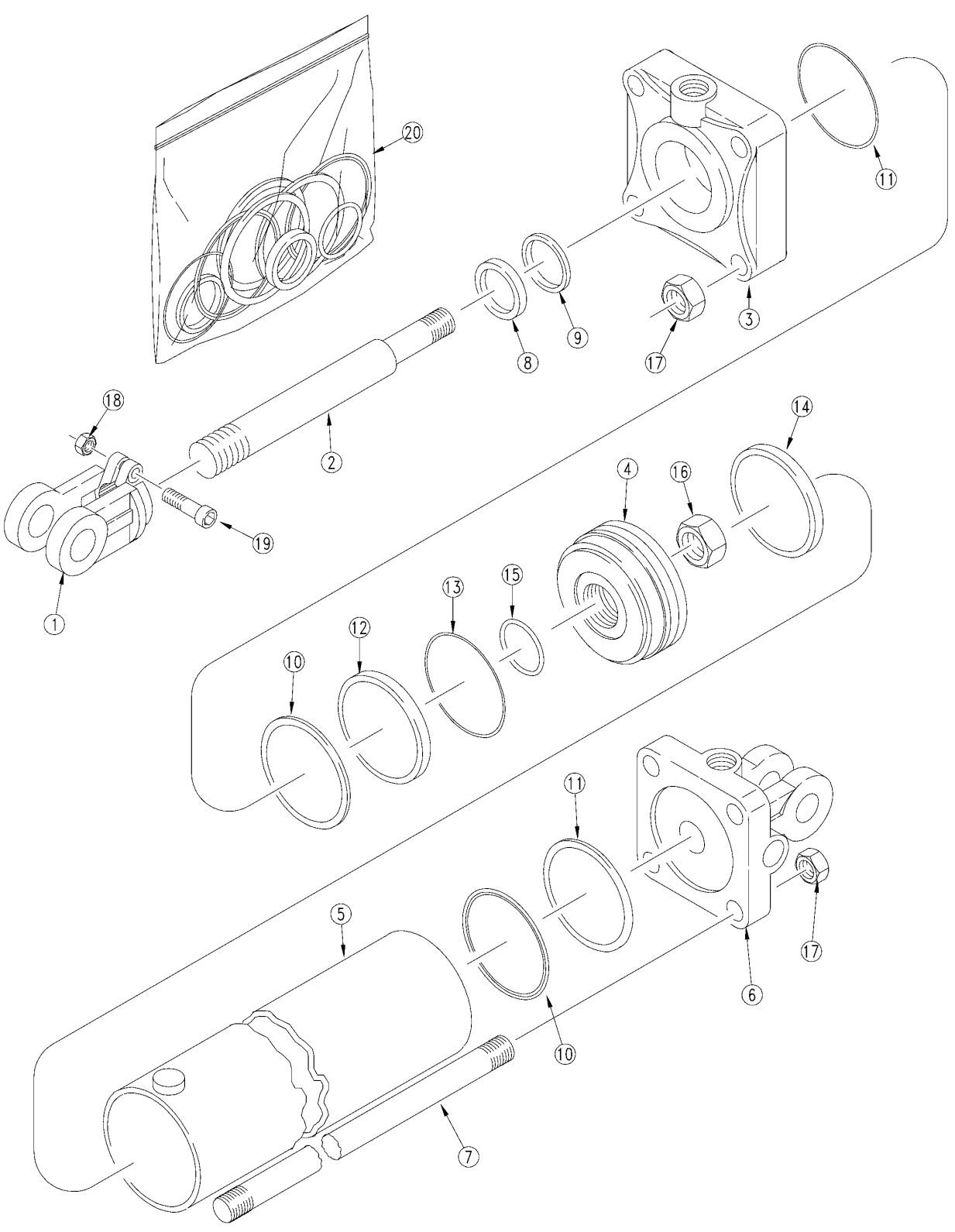

32805

Hydraulic Cylinder (810-834C 4.5x14.38x1.5 Rod)

(Applies to YP40 only)

Ref.	Part No.	Part Description	Comments	Revision
	dwg32805	Image No.		
1.	1M7022-ADI	MW ROD CLEVIS 1.25PN 1.5-12THD		
2.	2S7586NC	MW ROD		
3.	3R7540	MW HEAD		
4.	4R7113	PISTON MIDWAY		
5.	5R7193	MW TUBE		
6.	6R7190-ADI	MIDWAY ADI BASE		
7.	7M7425	MW TIE ROD		
8.		MW WIPER	Only available in item 20	
9.		U-CUP	Only available in item 20	
10.		O-RING	Only available in item 20	
11.		MW BACK UP	Only available in item 20	
12.		TEFLON SEAL	Only available in item 20	
13.		LOADER	Only available in item 20	
14.		WEAR RING	Only available in item 20	
15.		O-RING	Only available in item 20	
16.	2A0025	MW PISTON NUT 1 1/4"-12 UNF		
17.	803-257C	NUT HEX 3/4-16 PLAIN		
18.	803-234C	NUT HEX 3/8-16 PLAIN		
19.	802-023C	HHCS 3/8-16X1 3/4 GR5		
20.	810-158C	SEAL KIT MW 4.5 RPHCYL 4A7104		

Cylinder Mounting

(Applies to YP40 only)

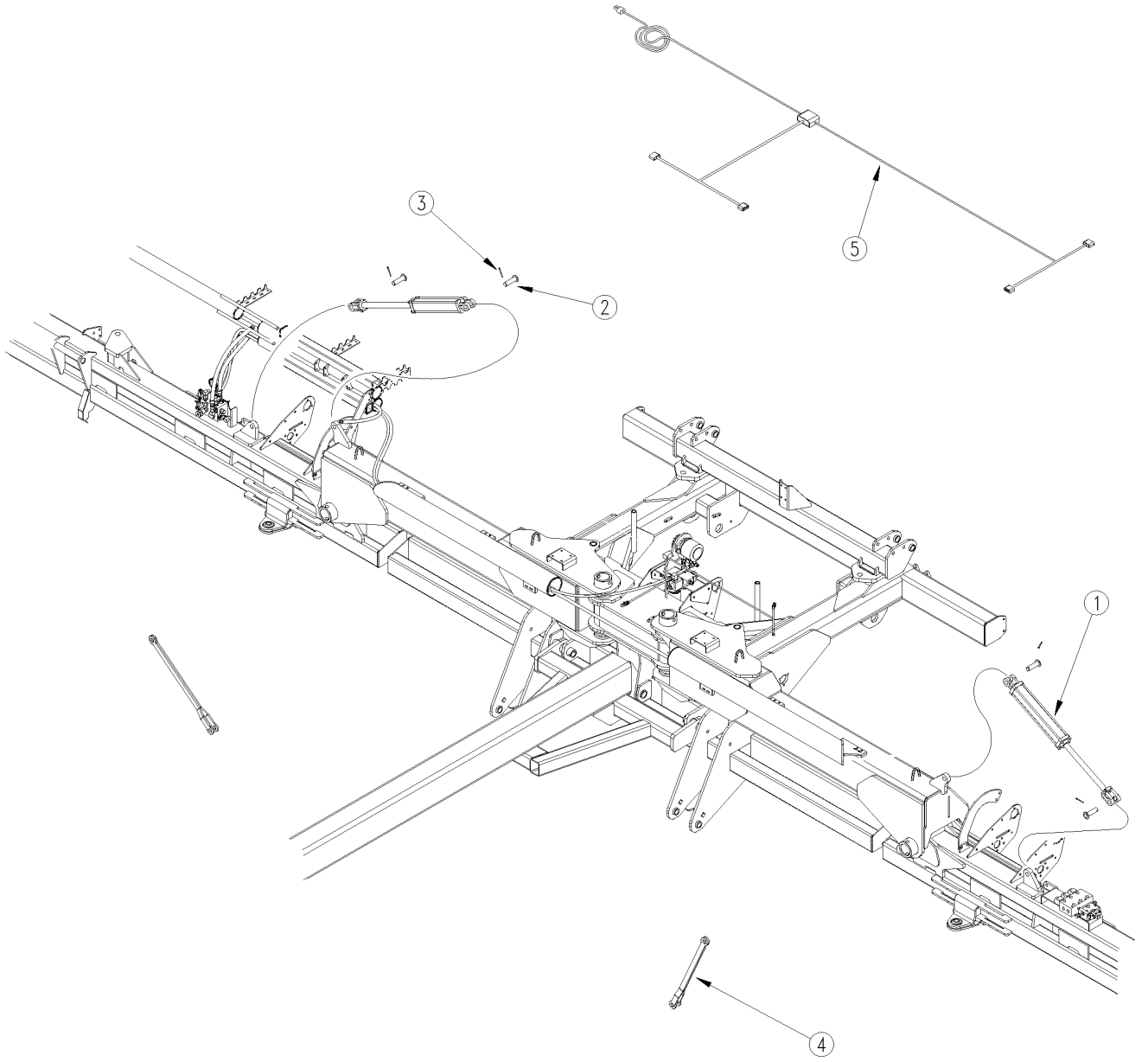

38013

Cylinder Mounting

(Applies to YP40 only)

Ref.	Part No.	Part Description	Comments	Revision
	dwg 38013	Image No.		
1.	810-708C	CYL 2.5X14X1.125 ROD (TIE ROD)	YP40/44	
2.	805-396C	PIN CLVS 1.0X3.13 USBL		
3.	805-058C	PIN COTTER 3/16 X 2		
4.	411-175H	WT SHIP LINK		
5.	823-445C	WEIGHT TRANS LIFT RELAY HARN		

Hose Routing

(Applies to YP40 only)

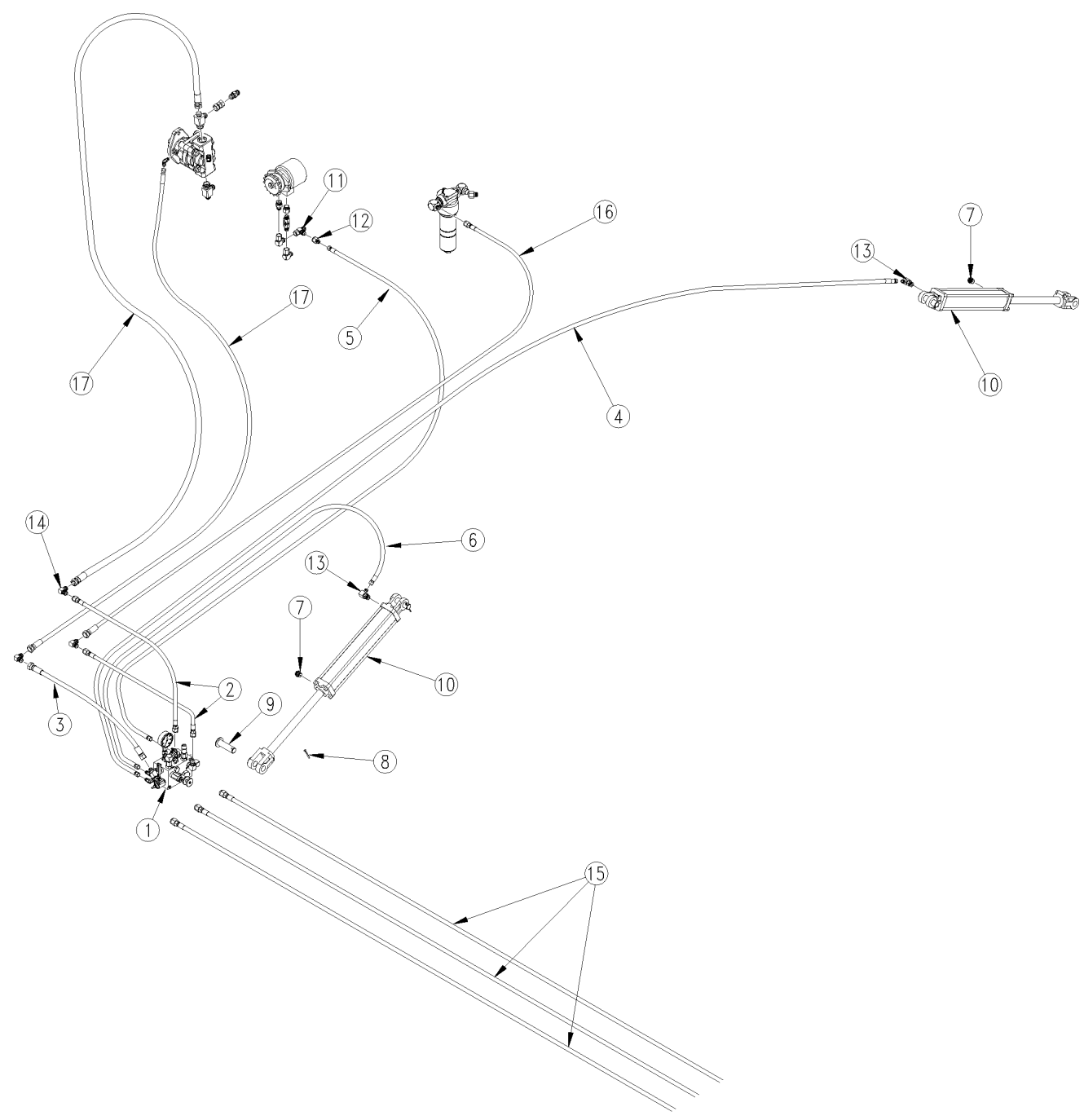

38011

Hose Routing

(Applies to YP40 only)

Ref.	Part No.	Part Description	Comments	Revision
	dwg 38011	Image No.		
1.	411-180S	WEIGHT TRANSFER VALVE ASM 3/4		
2.	811-269C	HH1/2R2 036 3/4FJIC		
3.	811-386C	HH3/8R2 036 3/4FJIC		
4.	841-930C	HH 1/2"X710 F/F BSP		
5.	841-073C	HH1/4R2 220 9/16FJIC		
6.	841-406C	HH3/8R2 107 9/16FJIC		
7.	800-306C	FILL PLUG VENTED 3/4-16 PLT		
8.	805-058C	PIN COTTER 3/16 X 2		
9.	805-396C	PIN CLVS 1.0X3.13 USBL		
10.	810-708C	CYL 2.5X14X1.125 ROD (TIE ROD)		
11.	811-073C	TE 3/4MJIC 3/4MJIC 3/4FJIC		
12.	811-146C	AD 3/4FJIC 9/16MJIC		
13.	811-171C	EL 3/4MORB 9/16MJIC		
14.	811-125C	HH3/8R2 082 3/4FJIC		
15.	841-163C	HH1/2R2 365 3/4MORB 3/4FJIC		
16.	811-846C	HH1/2R2 174 3/4FJIC		
17.	811-665C	HH1/2R2 208 3/4FJICc		

Weight Transfer Valve ASM 3/4 (411-180S)

(Applies to YP40 only)

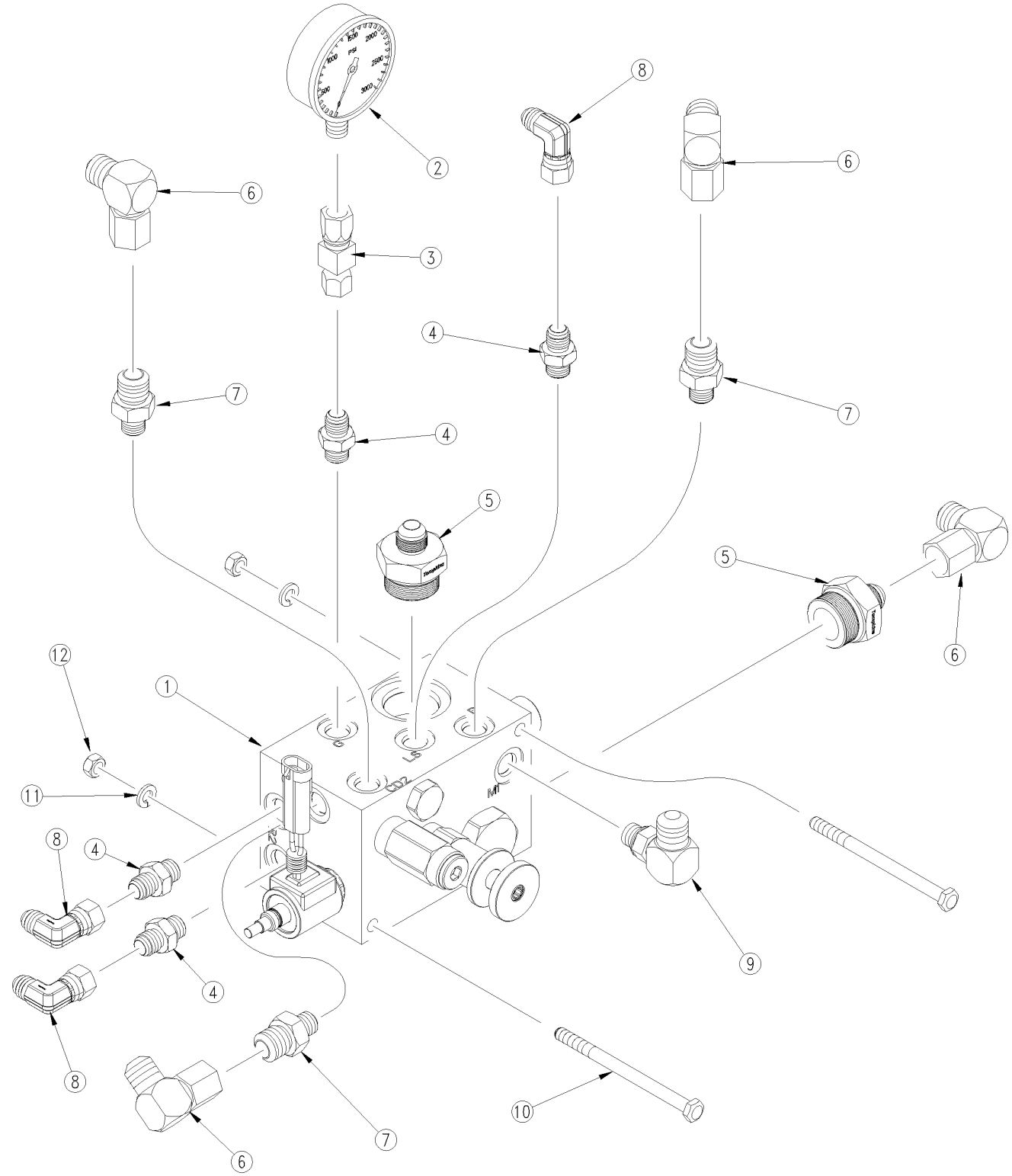

38007

Weight Transfer Valve ASM 3/4 (411-180S)

(Applies to YP40 only)

Ref.	Part No.	Part Description	Comments	Revision
	dwg 38007	Image No.		
1.	850-034C	VALVE PRESS REDUCING W/ PRIOR		
2.	810-300C	PRESSURE GAUGE 3000 PSI		
3.	811-582C	AD 9/16FJIC 1/4FNPT		
4.	811-170C	AD 9/16MORB 9/16MJIC		
5.	850-055C	AD 1 5/16MORB 3/4MJIC		
6.	811-150C	EL 3/4FJIC 3/4MJIC		
7.	811-584C	AD 9/16MORB 3/4MJIC		
8.	811-169C	EL 9/16MJIC 9/16FJIC		
9.	811-216C	EL 3/4MJIC 9/16MORB		
10.	802-474C	HHCS 5/16-18X4 1/2 GR5		
11.	804-009C	WASHER LOCK SPRING 5/16 PLT		
12.	803-008C	NUT HEX 5/16-18 PLT		

Decals

(Applies to YP40 only)

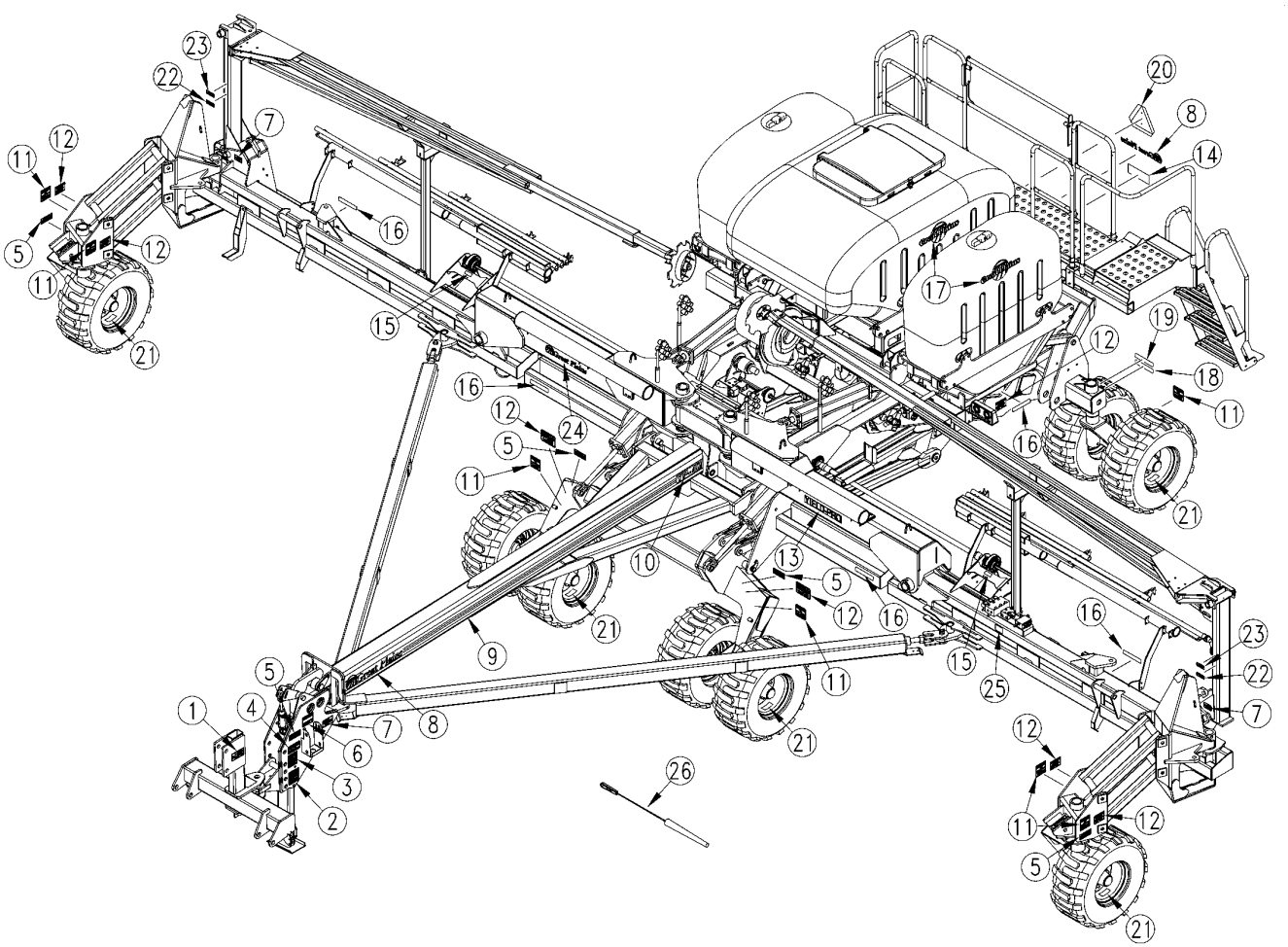

29164

Decals

(Applies to YP40 only)

Ref.	Part No.	Part Description	Comments	Revision
	dwg29164	Image No.		
1.	818-590C	DECAL DANGER CRUSH TRCTR & 3PT		
2.	818-587C	DECAL CAUTION OPERATIONAL MACH		
3.	838-094C	DECAL WARNING HYD PRESS LONG		
4.	818-188C	DECAL WARNING 20 MPH TRANS LRG		
5.	818-351C	DECAL CAUTION TRANSP LOCK ENGD		
6.	818-557C	DECAL DANGER CANNOT READ ENG		
7.	838-599C	DECAL DANGER ELECTROCUTION HA		
8.	838-161C	DECAL LOGO&GP F/STRIPE 4 X 24		
9.	838-160C	DECAL 3 COLOR STRIPE 2.50 WIDE		
10.	848-377C	DECAL YP-40		
11.	818-398C	DECAL CAUTION TIRES NOT A STEP		
12.	818-045C	DECAL WARNING PINCH PT/CRUSH		
13.	838-818C	DECAL YIELD-PRO		
14.	838-822C	DECAL TALC LUBRICANT YP		
15.	838-763C	DECAL CLUTCH LOCKUP		
16.	838-265C	DECAL REFLECTOR AMBER 1 1/2X9		
17.	838-228C	DECAL GREAT PLAINS ON LOGO SML		
18.	838-266C	DECAL REFLECTOR RED 1 1/2X9		
19.	838-267C	DECAL REFLECTR DAYTIME 1 1/2X9		
20.	818-055C	DECAL SLOW MOVING-GALV. BACKED		
21.	838-426C	DECAL CAUTION TIRE 60 PSI/170		
22.	818-579C	DECAL WARNING PINCH/SHEAR HAZ		
23.	818-580C	DECAL WARNING OVERHEAD MKR HAZ		
24.	838-168C	DECAL LOGO&GP F/STRIPE 6 X 35		
25.	848-083C	DECAL AUX HYD SELECTOR VALVE		
26.	891-259C	SEED TUBE CLEANER BRUSH		

Monitor and Frame Control

(Applies to YP40 only)

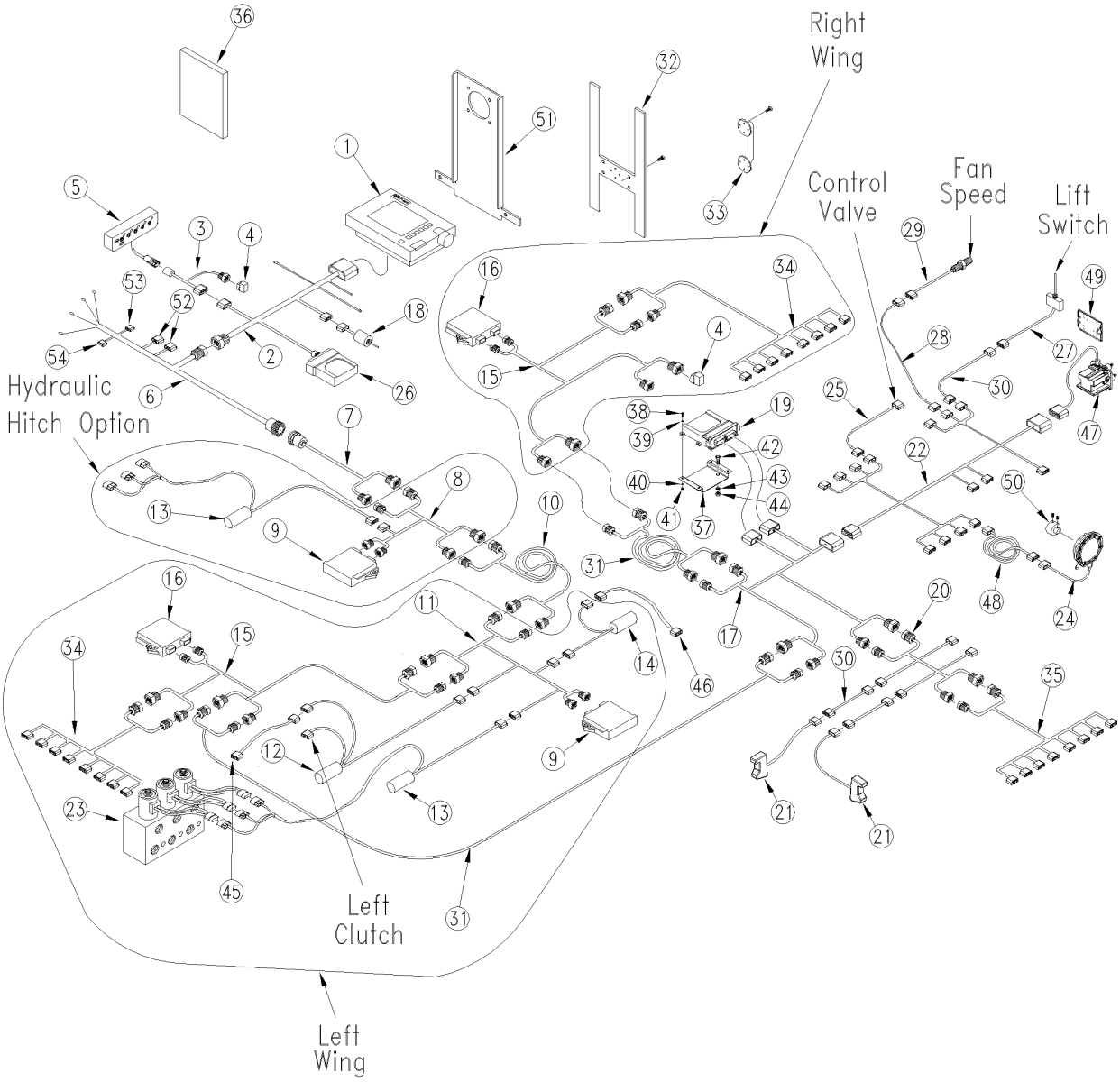

29297

Monitor and Frame Control

(Applies to YP40 only)

Ref.	Part No.	Part Description	Comments	Revision
	dwg29297	Image No.		
1.	843-097C	TOPCON X35 TERMINAL WITH MOUNT		
2.	843-032C	HARNESS DJ TRACTOR A1 TERMINAL		
3.	833-960C	CAN Y-HARN 24 MP630F MP630M		
4.	467980126	MINI CAN TERMINATOR		
5.	467984220S1	DJ YP CLUTCH/FLD CNTRL CAB BOX		
6.	843-027C	HARNESS, DJ, SYSTEM POWER IBBC		
7.	833-961C	EXT ISO IBBC MP630F MP150F 6'		
8.	833-979C	ISO T-HARN HITCH/LIFT		
9.	467982001S1	PLNTR CNTRL OUTPUT MODULE(POM)		
10.	843-072C	HARNESS, EXT, DUAL SOL PWR 30'		
11.	833-978C	ISO T-HARN 6-SOL OUTPUT		
12.	464820511S1	2SOL SMD DRV MDUL LFT/CNT CLUT		
13.	464820517S1	2 SOL SMD DRVR MODULE FOLD/MRK		
14.	464820518S1	DJ DRVR MODULE RH/ FERT CLUTCH		
15.	467981201A	INT AG HARNESS, WSMB MODULE		
16.	467981100S1	INTAG WSMB MODULE 18R		
16.	467988320S1	INTELLIAG WSMB-2 MODULE 18 ROW		
17.	843-028C	HARNESS, DJ, WSMT-2 YP24		
18.	467980124	ISO MASTER SWITCH		
19.	467987520S1	DJ WSMT-3 YP HYD PLANTER V1		
20.	467980410	DJ 12 ROW AND 4 HP ADP HARNESS		
21.	833-235C	DJ HOPPER LEVEL SENSOR		
22.	843-025C	HRNS, DJ, ACTUATOR, PDC-WSMT		
23.	810-636C	VALVE 3 WAY MULTIPLIER		
24.	464360176S1	APPLICATION RATE SENSOR		
25.	843-066C	HARNESS, EXT, 2PIN WP, 5'		
26.	467985060S1	TECU FOR 10" TRACTOR KIT		
27.	464820520S1	DJ SWITCH SPDT W/WISKER & WIRE		
28.	843-059C	HARNESS, EXT, 3PIN WP, 3'		
29.	466970014S1	DJ FAN RPM SENSOR THRD HALL		
30.	843-065C	HARNESS, EXT, DJ 1PINx3, 15'		
31.	833-975C	HARNESS, EXT, ISO, 25'		
32.	467980610	DJ SWITCH CNTRL BOX MNTNG BRKT		
33.	467980621	DJ VIRTUAL TERM A1 MNT BRK/HW		
34.	467981721	DJ 5 ROW WING HARNESS		
34.	467981720	DJ 5 ROW TWIN WING HARNESS		
34.	467981722	DJ 10 ROW 15 LEFT WING HARNESS		
34.	467981723	DJ 10 ROW 15 RIGHT WING HARNES		
34.	467981724	DJ 8 ROW WING HARNESS		
35.	467981710	DJ 6 ROW CENTER HARNESS		
35.	467981701	DJ 6 ROW TWIN CENTER HARNESS		
35.	833-981C	HARN ROW 11R15 14-28IN DROP		
35.	467981707	DJ 8 ROW CENTER HARNESS		
36.	110011431	DJ YP24 30 IN QUICK START GUID		
36.	110011430	DJ YP24 15 IN QUICK START GUID		
36.	110011429	DJ YP24 30TR QUICK START GUIDE		
36.	110011432	DJ YP24 20 IN QUICK START GUID		
37.	411-386D	WSMT II MOUNT ADAPTER PLATE		
38.	801-155C	HFS 10-24 X 3/4 PLT		
39.	804-046C	WASHER FLAT #10 SAE PLT		
40.	804-054C	WASHER LOCK #10		
41.	803-001C	NUT HEX 10-24 PLT		
42.	802-079C	HHCS 3/8-16X1 1/4 GR5		
43.	804-013C	WASHER LOCK SPRING 3/8 PLT		
44.	803-014C	NUT HEX 3/8-16 PLT		
45.	467980471	12 GA 2 PIN WP 20' EXTENSION		
46.	467980473	12 GA 2 PIN WP 30' EXTENSION		

Monitor and Frame Control (continued)

(Applies to YP40 only)

Ref	Part No.	Part Description	Comments	Revision
47.	467833000S1	DJ RVSIII W/ ISOLATION MOUNTS		
48.	843-055C	HARNESS, EXT, 3PIN WP, 30'		
49.	467830760	DJ RVSIII HARDWARE KIT		
50.	110040179	AR SENSOR MNT HRDW W/ 1 1/4CPL		
51.	467980621	DJ VIRTUAL TERM A1 MNT BRK/HW	For 10" monitor	
52.	843-034C	HARNESS, DJ, RELAY SWITCH		
53.	FUSE	30 AMP FUSE		
54.	FUSE	15 AMP FUSE		
55.	403-934A	BASIC INTELLIAG HARN RPLC KIT	Partial replacement kit. Contact dealer, see Service Bulletin 18-01-PLUS.	

Monitor and Frame Control (continued)

(Applies to YP40 only)

This Page Intentionally Left Blank

Marker

(Applies to YP40 only)

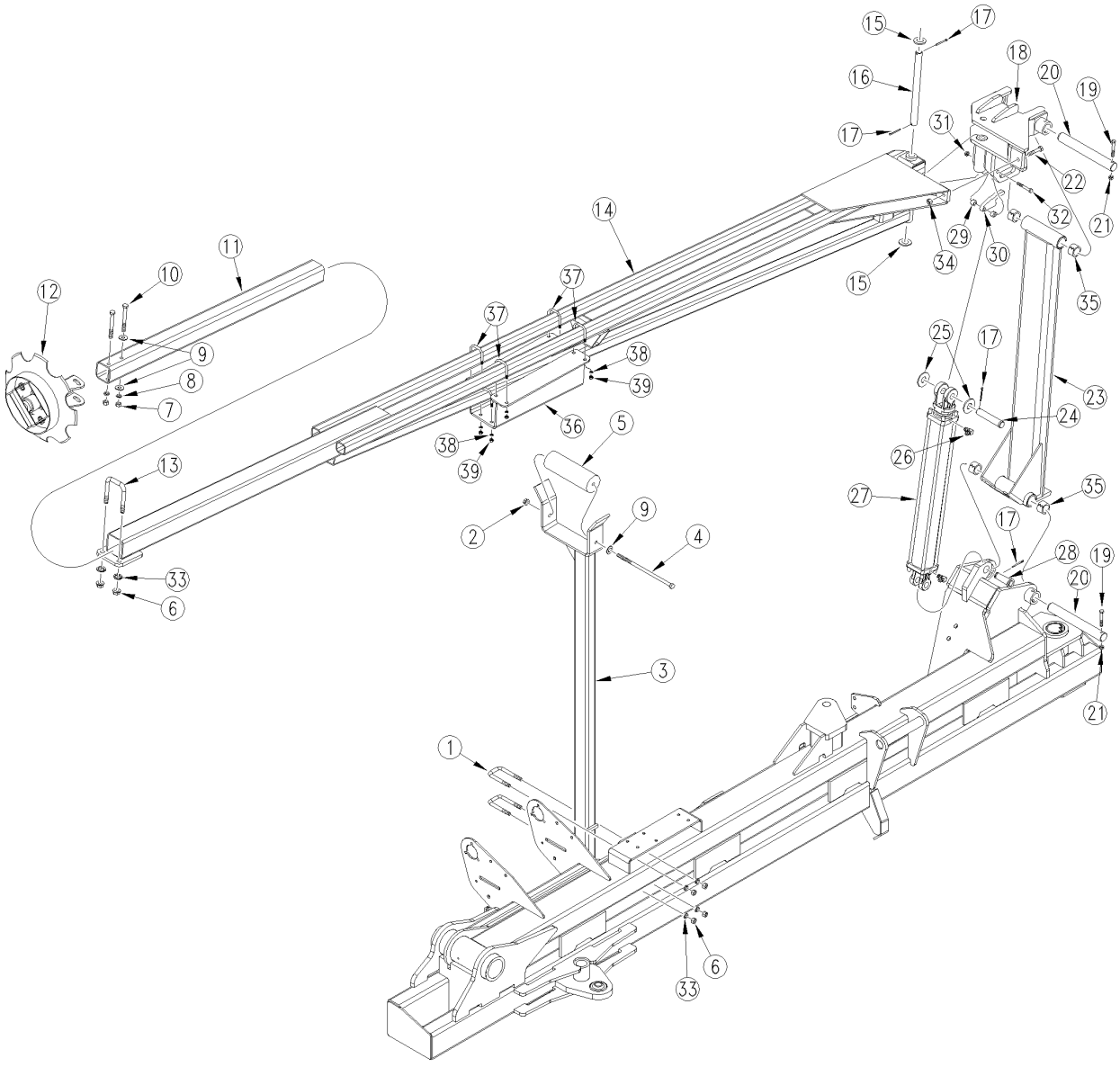

29177

Marker

(Applies to YP40 only)

Ref.	Part No.	Part Description	Comments	Revision
	dwg29177	Image No.		
1.	806-113C	U-BOLT 5/8-11 X 2 1/32 X 4 3/8		
2.	803-169C	NUT HEX FLG. LOCK 1/2-13 PLT.		
3.	113-816H	TRANSPORT REST WLDMNT		
4.	802-736C	HHCS 1/2-13X12 GR5		
5.	113-799D	MARKER REST BUMP STOP		
6.	803-021C	NUT HEX 5/8-11 PLT		
7.	803-020C	NUT HEX 1/2-13 PLT		
8.	804-015C	WASHER LOCK SPRING 1/2 PLT		
9.	804-017C	WASHER FLAT 1/2 USS PLT		
10.	802-413C	HHCS 1/2-13X4 1/2 GR5		
11.	113-794D	MARKER EXTENSION TUBE		
12.	113-025S	MARKER DISC ASSEMBLY	Refer to "Marker Disc Assembly (113-025S)" for breakdown.	
13.	806-110C	U-BOLT 5/8-11 X 3 1/32 X 4 1/2		
14.	113-010H	PLANTER MARKER 2ND SECTION LH		
14.	113-013H	PLANTER MARKER 2ND SECTION RH		
14.	113-481H	YP1625 36TR MARKER 2ND SEC LH	70CM Only	
14.	113-480H	YP1625 36TR MARKER 2ND SEC RH	70CM Only	
15.	804-029C	WASHER FLAT 1 SAE		
16.	113-798D	MARKER SHEAR PIVOT PIN		
17.	805-058C	PIN COTTER 3/16 X 2		
18.	113-016H	MARKER SHEAR HINGE LH		
18.	113-017H	MARKER SHEAR HINGE RH		
19.	802-216C	HHCS 3/8-16X2 3/4 GR5		
20.	113-797D	MARKER PIVOT PIN		
21.	803-013C	NUT LOCK 3/8-16 PLT		
22.	802-130C	HHCS 1/2-13X2 1/2 GR5		
23.	113-005H	MARKER ARM FIRST SECTION		
24.	805-131C	PIN CLEVIS 1 X 4 11/16 USABLE		
25.	804-028C	WASHER FLAT 1 USS PLT		
26.	811-065C	EL 9/16MJIC 9/16MORB		
27.	810-811C	CYL 3X23.5X1.50 ROD SPECIAL		
28.	805-004C	PIN CLEVIS 1 X 2 3/4 USABLE LG		
29.	113-683D	3S-4000 MARKER CYL PIN SPACER		
30.	113-811D	PLANTER MARKER CYL PIN LOCK		
31.	803-024C	NUT LOCK 5/8-11 PLT		
32.	802-100C	HHCS 5/8-11X4 1/2 GR5		
33.	804-022C	WASHER LOCK SPRING 5/8 PLT		
34.	803-019C	NUT LOCK 1/2-13 PLT		
35.	890-264C	BUSHING 1 3/4 X 1 1/2 X 1 1/2		
36.	113-852H	MARKER ARM SUPPORT WLMT		
37.	806-166C	U-BOLT 3/8-16 X 2 1/32 X 3		
38.	804-013C	WASHER LOCK SPRING 3/8 PLT		
39.	803-014C	NUT HEX 3/8-16 PLT		

Marker Disk Assembly (113-025S)

(Applies to YP40 only)

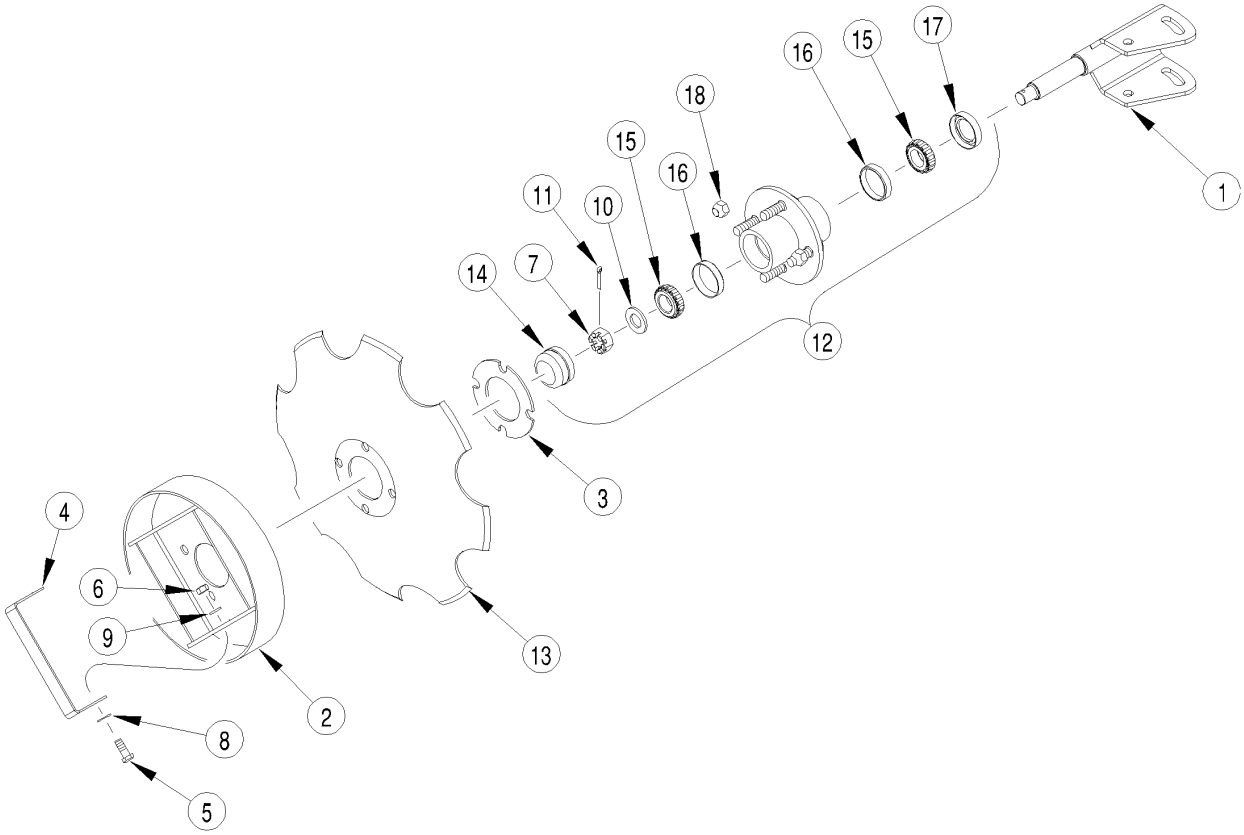

25018

Marker Disk Assembly (113-025S)

(Applies to YP40 only)

Ref.	Part No.	Part Description	Comments	Revision
	dwg 25018	Image No.		
1.	113-018H	MARKER DISC SPINDLE WELDMENT		
2.	113-369H	DEPTH BAND 10 4-BOLT 4B.C.		
3.	116-353D	BLADE SPACER		
4.	116-354D	MARKER DISC SAFETY STRAP		
5.	802-017C	HHCS 3/8-16X1 GR5		
6.	803-014C	NUT HEX 3/8-16 PLT		
7.	803-053C	NUT HEX SLOTTED 3/4-16		
8.	804-012C	WASHER FLAT 3/8 SAE PLT		
9.	804-013C	WASHER LOCK SPRING 3/8 PLT		
10.	804-025C	WASHER FLAT 3/4 SAE PLT		
11.	805-019C	PIN COTTER 5/32 X 1 PLT		
12.	815-001C	TINE GW HUB	Excludes 7, 10, 11.	
13.	820-094C	16 4-BOLT NOTCHED MARKER DISK		
14.	890-614C	GREASE CAP #1505		
15.	822-030C	BRG CONE 1.00ID L44643		
16.	822-080C	BRG CUP 1.98OD L44610		
17.	816-014C	TINE GAUGE WHEEL HUB SEAL		
18.	803-159C	NUT LUG 1/2-20X60DEG PLT(.75AF		

Fertilizer Tanks and Mounts

(Applies to YP40 only)

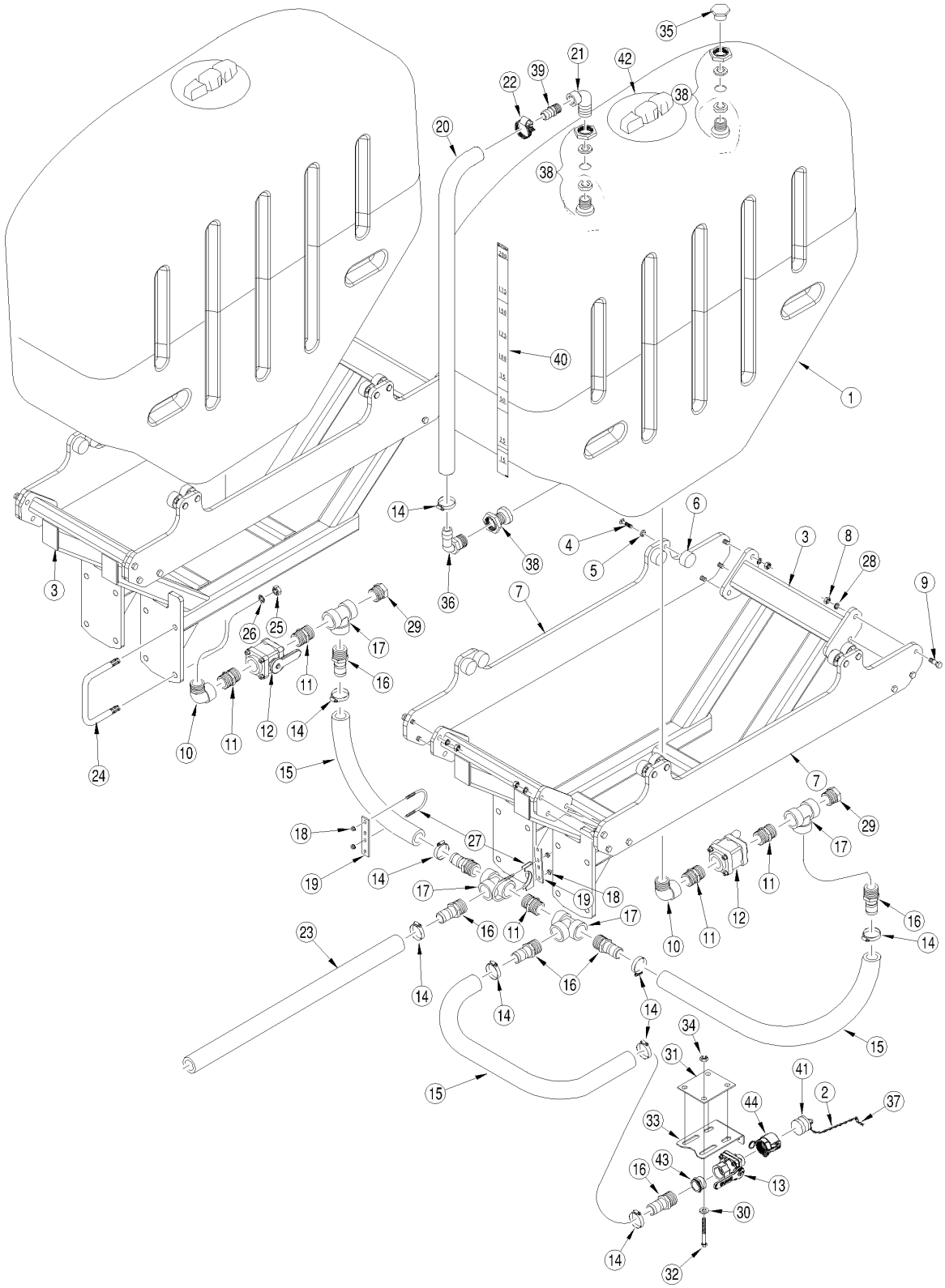

29300

Fertilizer Tanks and Mounts

(Applies to YP40 only)

Ref.	Part No.	Part Description	Comments	Revision
	dwg29300	Image No.		
1.	817-555C	BULK PLANTER 200 GAL FERT TANK		
2.	502-060D	DUST PLUG CHAIN 10		
3.	401-555H	200 GAL TANK SUPPORT WLDMT		
4.	802-258C	HHCS 1/2-13X1 GR5		
5.	804-015C	WASHER LOCK SPRING 1/2 PLT		
6.	816-170C	RD BUMP STOP 2 X 1 X 1/2-13		
7.	407-116D	TANK CRADLE SIDE BAR		
8.	803-020C	NUT HEX 1/2-13 PLT		
9.	802-055C	HHCS 5/8-11X2 GR5		
10.	830-052C	EL 1 1/2MNPT X 1 1/2FNPT POLYP		
11.	830-045C	AD 1 1/2MNPT POLYPROP		
12.	829-013C	VALVE 1 1/2FNPT BALL POLYPROP		
13.	829-109C	VALVE - 2MNPT X 2FNPT FP POLYP	Items 43 (830-149C) & 44 (830-174C) must be ordered when replacing 829-109C.	
14.	800-125C	CLAMP WRM DRV#28 SS(1.31-2.25)		
15.	990-181R	HOSE 1 1/2 ID 150PSI EPDM		
16.	830-094C	AD 1 1/2MNPT X 1 1/2HB POLYP		
17.	830-031C	TEE 1 1/2FNPT POLYPROP		
18.	803-199C	NUT HEX FLANGE 5/16-18 PLT		
19.	506-365D	WET BOOM FLAT HOSE BRACKET		
20.	990-078R	HOSE 3/4ID X 1/8 WL CLEAR PVC		
21.	830-380C	EL 3/4MNPT X 3/4FNPT SS		
22.	800-123C	CLAMP WRM DRV #16 SS (.68-1.5)		
23.	990-082R	HOSE 1 ID 200PSI EPDM		
24.	806-055C	U-BOLT 3/4-10 X 7 1/32 X 7		
25.	803-027C	NUT HEX 3/4-10 PLT		
26.	804-023C	WASHER LOCK SPRING 3/4 PLT		
27.	890-522C	MUFFLER CLAMP 2.50 SIZE		
28.	804-022C	WASHER LOCK SPRING 5/8 PLT		
29.	830-024C	PL 1 1/2MNPT POLYPROP		
30.	804-016C	WASHER FLAT 1/2 SAE PLT		
31.	411-273C	VALVE MVNT CLAMP PLATE		
32.	802-047C	HHCS 1/2-13X6 GR5		
33.	148-410D	VALVE MOUNT PLATE		
34.	803-147C	NUT HEX NYLOCK 1/2-13		
35.	830-021C	PL 3/4MNPT POLYPROP		
36.	830-123C	EL 3/4MNPT X 3/4HB POLYPROP		
37.	805-010C	PIN HAIR COTTER .094		
38.	830-295C	SP 3/4FNPT DBL THD BH PO BANJO		
39.	830-381C	AD 3/4MNPT X 3/4HB SS		
40.	838-823C	DECAL YP FERTILIZER LEVEL		
41.	830-186C	PL 2MCL POLY-GLASS		
42.	ACE-10525	TANK LID 8 COMP ACE ROTO-MOLD		
43.	830-149C	AD 2MNPT X 1 1/2FNPT POLYPROP		
44.	830-174C	AD 2FNPT X 2FCL POLYPROP		

Fertilizer Contact Wheel Breakdown (S/N B1056A-)

(Applies to YP40 only)

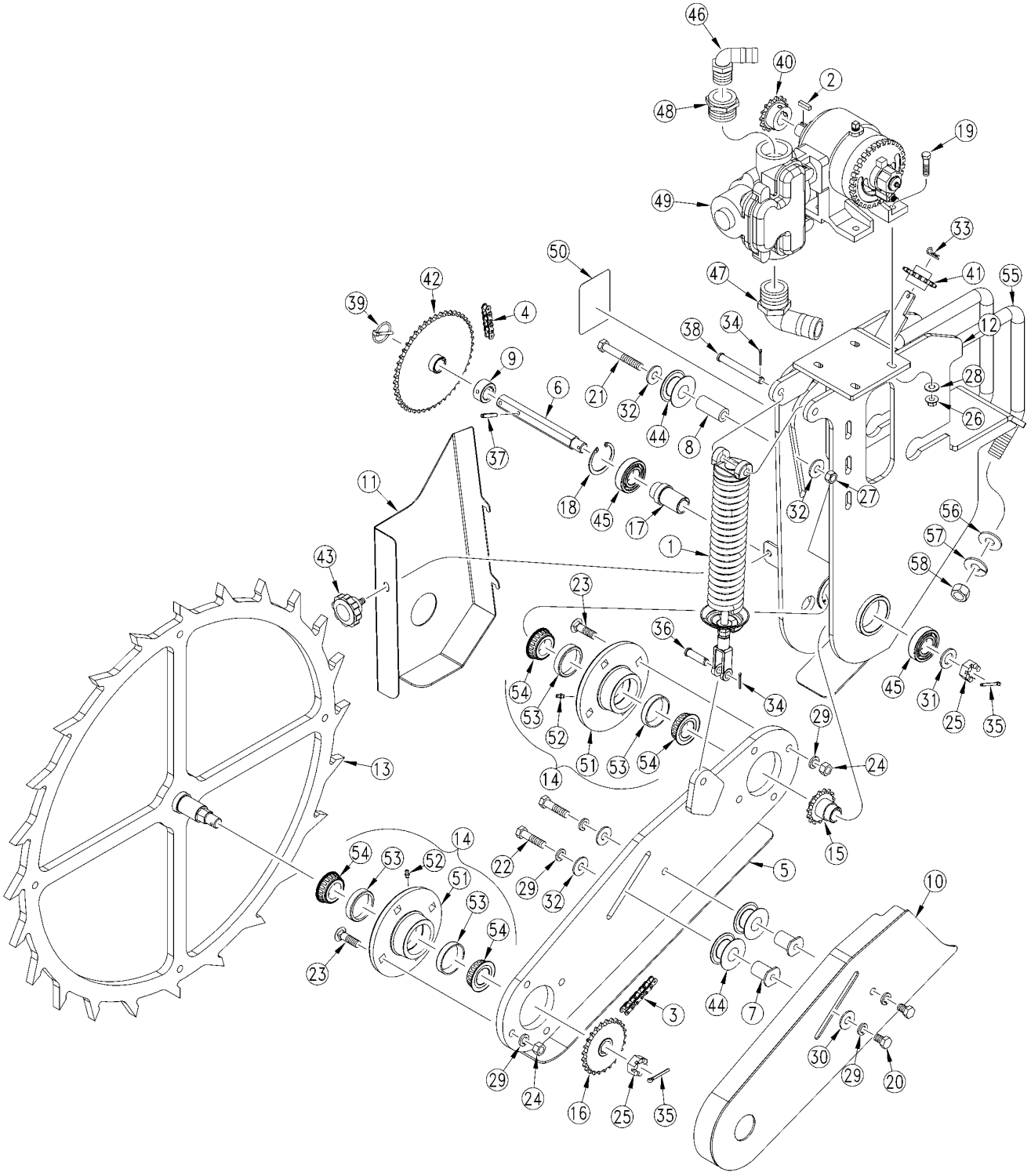

28419

Fertilizer Contact Wheel Breakdown (S/N B1056A-)

(Applies to YP40 only)

Ref.	Part No.	Part Description	Comments	Revision
	dwg28419	Image No.		
1.	121-763S	OPENER SPRING ROD ASSY. SHRT.		
2.	123-004D	KEY 1/4 X 1		
3.	136-155D	CHAIN RL #40 120 PITCHES		
4.	136-249D	CHAIN RL #40 130 PITCHES		
5.	407-143H	FERT CONT WHL ARM WLMT		
6.	407-168D	FERT DRIVE CONT WHL JACK SHAFT		
7.	407-169D	IDLER PIVOT TUBE		
8.	407-170D	TUBE RND 1 OD X 7/32WL X 2.25		
9.	407-172D	7/8 HEX X 3/4 LNG SPKT SPACER		
10.	407-193H	CONTACT WHL DR SHLD LWR		
11.	407-222H	FERT PUMP UPR CHAIN GUARD WLMT		
12.	407-225H	GRND DRIVE JB FERT PUMP MNT		
13.	407-226H	FERT CONT WHL WLMT		
14.	407-227S	4BOLT HUB ASY TAPPERED ROL BRG	Shown, Includes items 51-54. (S/N B1071A-)	
14.	407-521S	4BOLT HUB ASY TAPPERED ROL BRG	Includes items 51-54. (s/N B1072A+)	
15.	407-228H	FERT DRIVE CONT WHL SPKT WLMT	Shown (S/N B071A-)	
15.	407-736H	FERT DRIVE CONT WHL SPKT WLMT	(S/N B1072A+)	
16.	407-229H	FERT DRIVE SPKT WLMT		
17.	407-329D	BEARING SPACER	Shown (S/N B1071A-)	
17.	407-826D	BEARING SPACER	(S/N B1072A+)	
18.	800-382C	SNAP RING INT 2.44 OD		
19.	802-022C	HHCS 3/8-16X1 1/2 GR5		
20.	802-032C	HHCS 1/2-13X3/4 GR5		
21.	802-041C	HHCS 1/2-13X3 1/2 GR5		
22.	802-128C	HHCS 1/2-13X2 GR5		
23.	802-331C	RHSNB 1/2-13X1 3/4 GR5		
24.	803-020C	NUT HEX 1/2-13 PLT		
25.	803-053C	NUT HEX SLOTTED 3/4-16		
26.	803-086C	NUT MAC-LOK FLG 3/8-16 GR F		
27.	803-147C	NUT HEX NYLOCK 1/2-13		
28.	804-011C	WASHER FLAT 3/8 USS PLT		
29.	804-015C	WASHER LOCK SPRING 1/2 PLT		
30.	804-017C	WASHER FLAT 1/2 USS PLT		
31.	804-093C	WASHER FLAT 3/4 HARD ASTMF436		
32.	804-113C	WASHER FLAT 1/2 USS HARD PLT		
33.	805-010C	PIN HAIR COTTER .094		
34.	805-064C	PIN COTTER 7/64 X 1 LONG	Shown (S/N B1071A-)	
34.	805-143C	PIN HAIR COTTER .120 PLT	(S/N B1072A+)	
35.	805-104C	PIN COTTER 3/16 X 1 1/2 PLT		
36.	805-127C	PIN CLEVIS 1/2 X 1 3/4		
37.	805-180C	PIN ROLL 1/4 X 1 1/2 LG PLT		
38.	805-234C	PIN CLEVIS 1/2 X 4 PLATED	Shown (S/N B1071A-)	
38.	805-235C	PIN CLEVIS 1/2 X 5 PLATED	(S/N B1072A+)	
39.	805-240C	PIN LINCH 3/16 X 1 9/16 LONG		
40.	808-062C	SPKT 40B15 X 1 B W/KW & SS		
41.	808-147C	SPKT 40C15 X 7/8 HEX BORE		
42.	808-262C	SPKT 40C47 X 7/8 HEX BORE		
43.	817-358C	KNOB 3/8-16 MALE THD 2 3/8OD		
44.	817-406C	IDLER 1 PC 2.38X1.01X1.062		
45.	822-216C	BRG BALL 1.18ODX2.44OD		
46.	830-127C	EL 1MNPT X 1HB POLYPROP		
47.	830-133C	EL 1 1/2MNPT X 1 1/2HB POLYP		
48.	830-145C	AD 1 1/2MNPT X 1FNPT POLYPROP		
49.	831-068C	JB PISTON PUMP NGP 6055-K	Refer to "John-Blue Pump (831-068C)" for breakdown	
50.	848-095C	DECAL FERT DRIVE		

Fertilizer Contact Wheel Breakdown (S/N B1056A-) (continued)

(Applies to YP40 only)

Ref	Part No.	Part Description	Comments	Revision
51.	407-327D	4BOLT HUB TAPPERED ROL BRG	Shown (S/N B1071A-)	
51.	407-635D	4BOLT HUB TAPPERED ROL BRG	(S/N B1072A+)	
52.	800-001C	GREASE ZERK STRAIGHT 1/4-28		
53.	822-020C	BRG CUP LM-67010	Shown (S/N B1071A-)	
53.	822-033C	BRG CUP LM-48510	(S/N B1072A+)	
54.	822-240C	BRG, DUO-FACE W/SEAL LM67000LA	Shown (S/N B1071A-)	
54.	822-259C	BRG, DUO-FACE W/SEAL LM48500LA	(S/N B1072A+)	
55.	806-102C	U-BOLT 3/4-10 CORNER 7 SQ		
56.	804-025C	WASHER FLAT 3/4 SAE PLT		
57.	804-023C	WASHER LOCK SPRING 3/4 PLT		
58.	803-027C	NUT HEX 3/4-10 PLT		

Fertilizer Contact Wheel Breakdown (S/N B1056A-) (continued)

(Applies to YP40 only)

This Page Intentionally Left Blank

Fertilizer Contact Wheel Breakdown (S/N B1057A+)

(Applies to YP40 only)

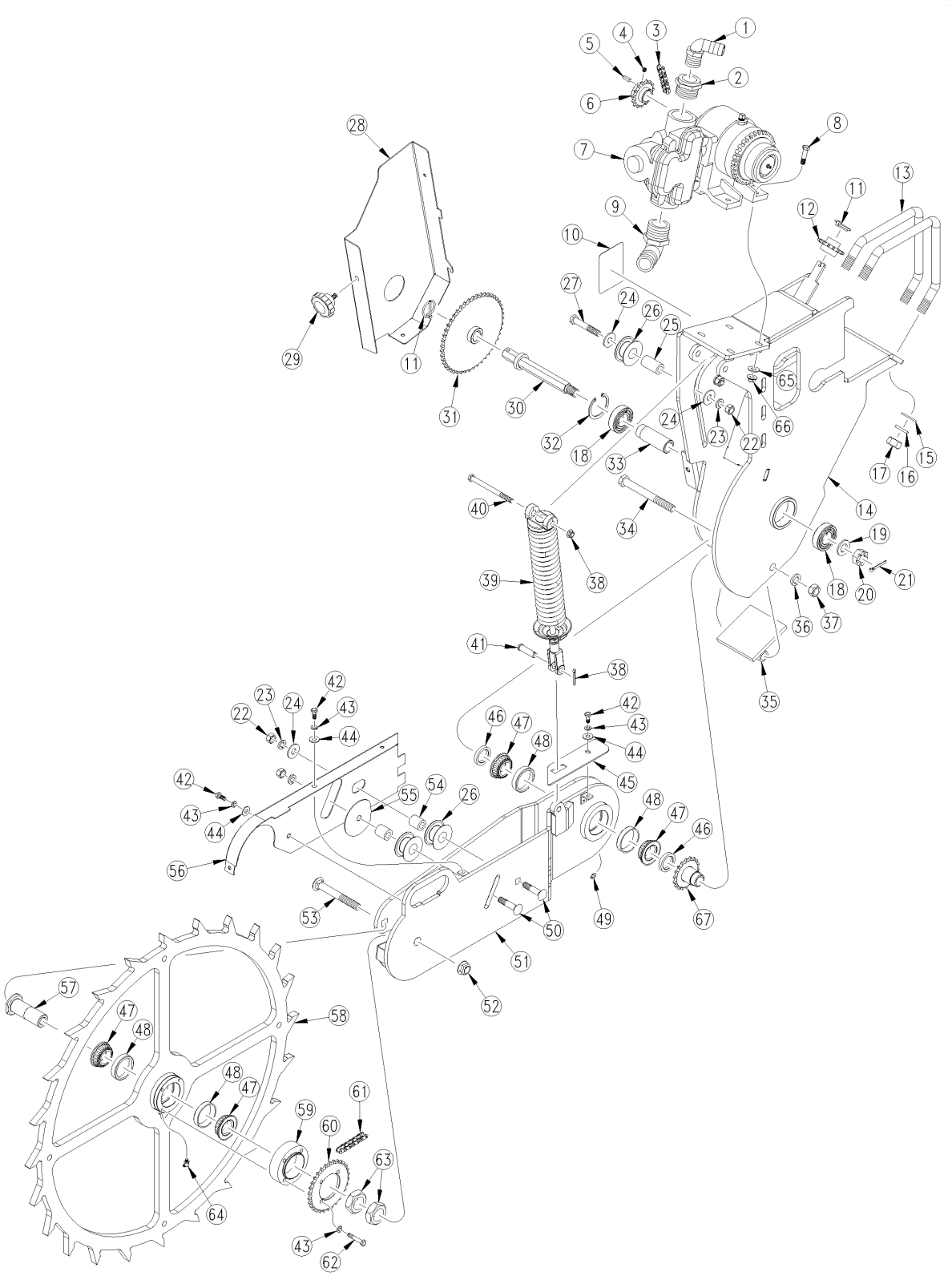

32003

Fertilizer Contact Wheel Breakdown (S/N B1057A+)

(Applies to YP40 only)

Ref.	Part No.	Part Description	Comments	Revision
	dwg32003	Image No.		
1.	830-127C	EL 1MNPT X 1HB POLYPROP		
2.	830-145C	AD 1 1/2MNPT X 1FNPT POLYPROP		
3.	136-261D	CHAIN RL #40 144 PITCHES		
4.	801-231C	SCR SET SKT KCP 5/16-18X5/16NY		
5.	123-004D	KEY 1/4 X 1		
6.	407-469H	SPKT 40C15 1 ID X 1.13 KW/2SS		
7.	831-068C	JB PISTON PUMP NGP 6055-K		
8.	802-002C	RHSNB 1/4-20X3/4 GR5		
9.	830-133C	EL 1 1/2MNPT X 1 1/2HB POLYP		
10.	848-095C	DECAL FERT DRIVE		
11.	805-240C	PIN LINCH 3/16 X 1 9/16 LONG		
12.	808-147C	SPKT 40C15 X 7/8 HEX BORE		
13.	806-102C	U-BOLT 3/4-10 CORNER 7 SQ		
14.	407-465H	FERT DRIVE MOUNT WELDMENT		
15.	804-025C	WASHER FLAT 3/4 SAE PLT		
16.	804-023C	WASHER LOCK SPRING 3/4 PLT		
17.	803-027C	NUT HEX 3/4-10 PLT		
18.	822-216C	BRG BALL 1.18ODX2.44OD		
19.	804-093C	WASHER FLAT 3/4 HARD ASTMF436		
20.	803-053C	NUT HEX SLOTTED 3/4-16		
21.	805-104C	PIN COTTER 3/16 X 1 1/2 PLT		
22.	803-020C	NUT HEX 1/2-13 PLT		
23.	804-015C	WASHER LOCK SPRING 1/2 PLT		
24.	804-113C	WASHER FLAT 1/2 USS HARD PLT		
25.	407-598D	IDLER PIVOT TB 1ODX.56IDX1.84L		
26.	817-406C	IDLER 1 PC 2.38X1.01X1.062		
27.	802-039C	HHCS 1/2-13X3 GR5		
28.	407-474H	PUMP DRIVE CHAIN SHIELD WELDMT		
29.	817-358C	KNOB 3/8-16 MALE THD 2 3/8OD		
30.	407-463H	FERT DRIVE SHAFT WELDMENT		
31.	808-262C	SPKT 40C47 X 7/8 HEX BORE		
32.	800-382C	SNAP RING INT 2.44 OD		
33.	407-600D	FERT DRIVE WHL BEARING SPACER		
34.	802-116C	HHCS 5/8-11X6 GR5		
35.	407-468H	FERT DRIVE ARM STOP PLT WELDMT		
36.	804-022C	WASHER LOCK SPRING 5/8 PLT		
37.	803-021C	NUT HEX 5/8-11 PLT		
38.	803-019C	NUT LOCK 1/2-13 PLT		
39.	407-992S	GND DRIVE SPRING ASY		
40.	802-045C	HHCS 1/2-13X5 GR5		
41.	805-127C	PIN CLEVIS 1/2 X 1 3/4		
42.	802-007C	HHCS 5/16-18X3/4 GR5		
43.	804-009C	WASHER LOCK SPRING 5/16 PLT		
44.	804-010C	WASHER FLAT 5/16 USS PLT		
45.	407-650D	CHAIN MUD SHIELD		
46.	407-581D	BEARING SPACER RING		
47.	822-240C	BRG, DUO-FACE W/SEAL LM67000LA		
48.	822-020C	BRG CUP LM-67010		
49.	800-001C	GREASE ZERK STRAIGHT 1/4-28		
50.	802-250C	RHSNB 1/2-13X2 1/4 GR5		
51.	407-461H	FERT DRIVE WHL SPLIT ARM WLDMT		
52.	803-263C	NUT HEX FLANGE LOCK 5/8-11 PLT		
53.	802-194C	RHSNB 5/8-11X5 GR5		
54.	407-592D	IDLER PIVOT TB 1ODX.56IDX1.13L		
55.	407-587D	WASHER SPECIAL .074 X .53		
56.	407-470H	FERT DRIVE CHAIN SHIELD WELDMT		
57.	407-580D	FERT DRIVE WHEEL SPINDLE		

Fertilizer Contact Wheel Breakdown (S/N B1057A+) (continued)

(Applies to YP40 only)

Ref	Part No.	Part Description	Comments	Revision
58.	407-462H	FERT DRIVE WHEEL WELDMENT		
59.	407-578D	SPROCKET SPACER RING		
60.	407-579D	LOWER DRIVE SPROCKET		
61.	136-016D	CHAIN RL #40 122 PITCHES		
62.	802-013C	HHCS 5/16-18X1 3/4 GR5		
63.	803-383C	NUT HEX JAM 1 1/4-12 PLT		
64.	800-058C	GREASE ZERK 1/4-28 X 45-DEG		
65.	804-011C	WASHER FLAT 3/8 USS PLT		
66.	803-086C	NUT MAC-LOK FLG 3/8-16 GR F		
67.	407-466H	FERT DRIVE WHL PUMP DRIVE SPKT		

Fertilizer Contact Wheel Breakdown (S/N B1057A+) (continued)

(Applies to YP40 only)

This Page Intentionally Left Blank

Fertilizer Contact Wheel Lock Up (S/N B1058A+)

(Applies to YP40 only)

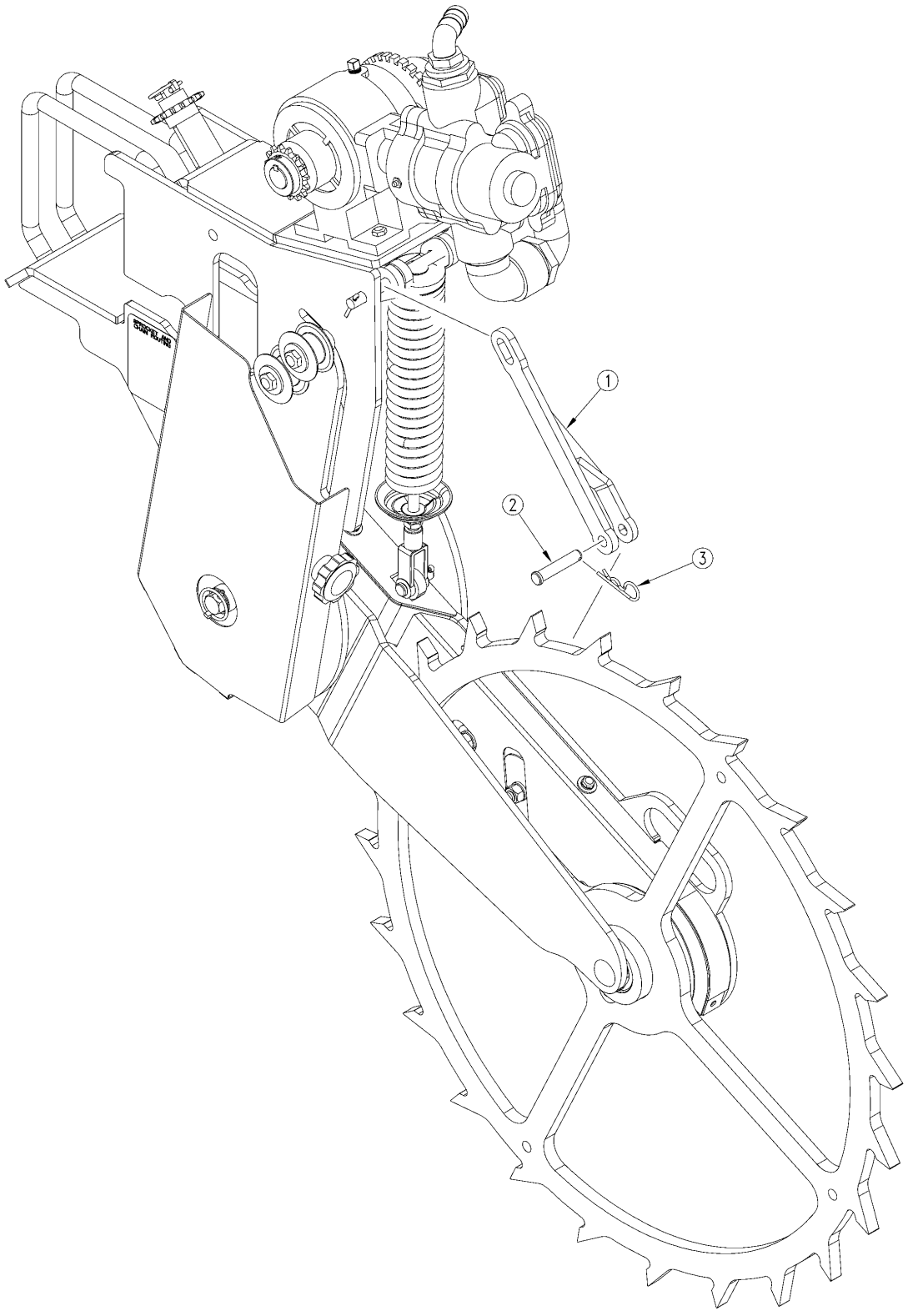

32360

Fertilizer Contact Wheel Lock Up (S/N B1058A+)

(Applies to YP40 only)

Ref.	Part No.	Part Description	Comments	Revision
	dwg32360	Image No.		
1.	407-741H	FERT CONT WHL LOCK UP WLDMNT		
2.	805-192C	PIN CLEVIS 1/2 X 2 1/2 PLT		
3.	805-143C	PIN HAIR COTTER .120 PLT		

Fertilizer Plumbing

(Applies to YP40 only)

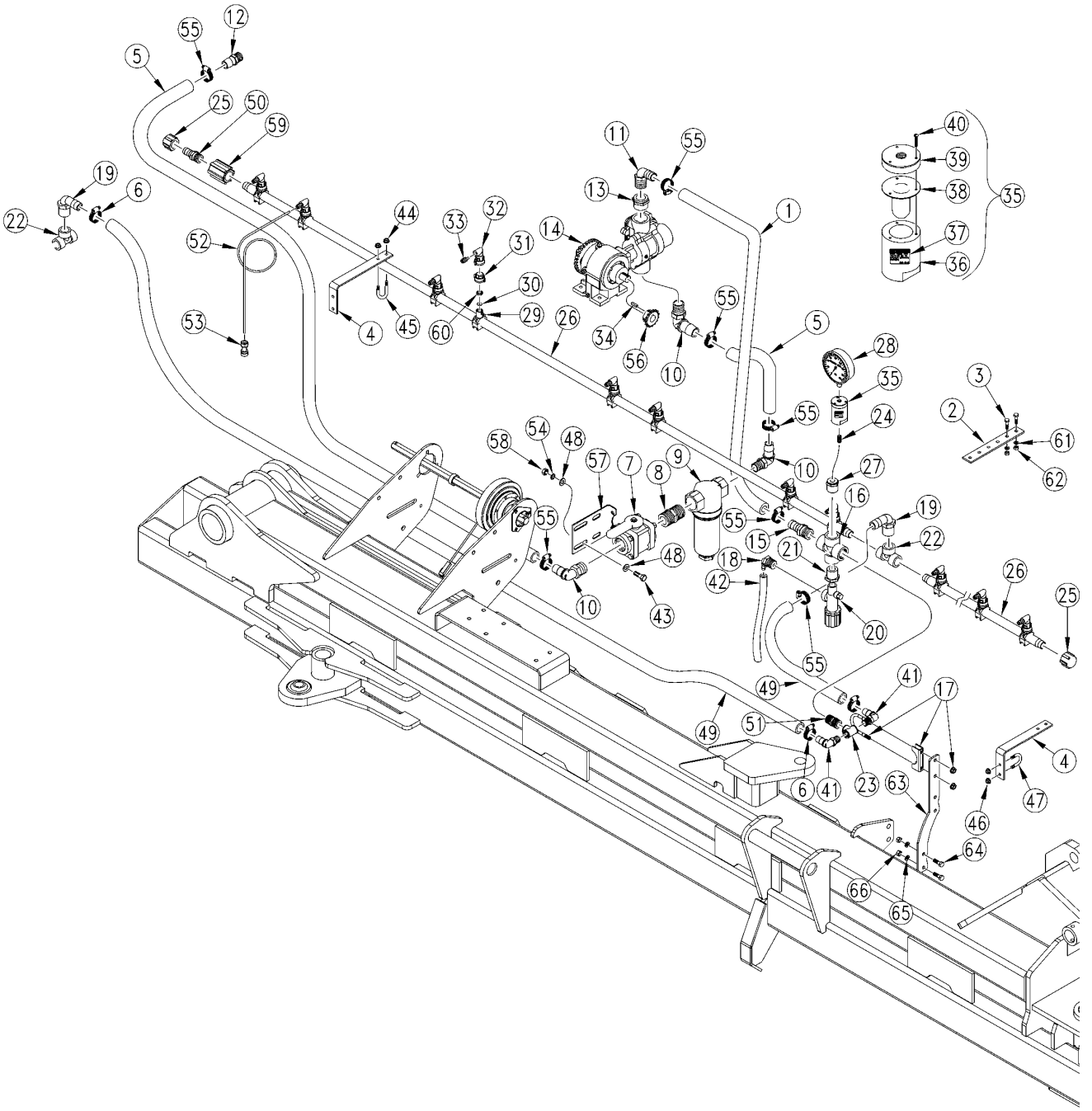

29308

Fertilizer Plumbing

(Applies to YP40 only)

Ref.	Part No.	Part Description	Comments	Revision
	dwg29308	Image No.		
1.	990-082R	HOSE 1 ID 200PSI EPDM		
2.	403-595D	BOLT TAB 1/2 AND 5/8		
3.	802-005C	HHCS 1/4-20X1 GR5		
4.	407-380D	OUTSIDE BOOM SUPPORT		
5.	990-181R	HOSE 1 1/2 ID 150PSI EPDM		
6.	800-123C	CLAMP WRM DRV #16 SS (.68-1.5)		
7.	829-013C	VALVE 1 1/2FNPT BALL POLYPROP		
8.	830-045C	AD 1 1/2MNPT POLYPROP		
9.	831-029C	STRAINER BANJO LST150-80 MESH		
10.	830-133C	EL 1 1/2MNPT X 1 1/2HB POLYP		
11.	830-127C	EL 1MNPT X 1HB POLYPROP		
12.	830-094C	AD 1 1/2MNPT X 1 1/2HB POLYP		
13.	830-145C	AD 1 1/2MNPT X 1FNPT POLYPROP		
14.	831-068C	JB PISTON PUMP NGP 6055-K	Refer to "John-Blue Pump (810-068C)" for breakdown	
15.	830-087C	AD 1MNPT X 1HB POLYPROP		
16.	830-237C	CR 1FNPT		
17.	890-521C	MUFFLER CLAMP 1.63 SIZE		
18.	830-121C	EL 3/4MNPT X 3/8HB POLYPROP		
19.	830-123C	EL 3/4MNPT X 3/4HB POLYPROP		
20.	829-105C	VALVE RELIEF 0-150 PSI POLYP		
21.	830-142C	AD 1MNPT X 3/4FNPT POLYPROP		
22.	830-028C	TEE 3/4FNPT POLYPROP		
23.	830-029C	TEE 1FNPT POLYPROP		
24.	830-260C	AD 1/4MNPT SCH 40 X 2 304SS		
25.	830-061C	CA 3/4FNPT POLYPROP		
26.	407-134D	MANIFOLD 40 FT TWIN ROW		
26.	407-140D	MANIFOLD 30 FOOT TWIN ROW		
27.	830-258C	AD 1MNPT X 1/4FNPT POLYPROP		
28.	829-104C	GAUGE 160 PSI 4IN STAINLESS ST		
29.	829-089C	NOZZLE BODY 3/4 WET BOOM CLAMP		
30.	832-054C	ORIFICE SPR SYS CP4916-48 SS		
30.	832-052C	ORIFICE SPR SYS CP4916-20 SS		
30.	832-053C	ORIFICE SPR SYS CP4916-34 SS		
30.	832-056C	ORIFICE SPR SYS CP4916-28 SS		
30.	832-055C	ORIFICE SPR SYS CP4916-80 SS		
31.	832-042C	NOZZLE SHUT OFF CAP W/ GASKET		
32.	832-051C	NOZZLE CAP QUICK X 90X1/4 FNPT		
33.	800-367C	AD PUSH 1/4TUBEX1/4MNPT		
34.	123-004D	KEY 1/4 X 1		
35.	507-034V	GAUGE PROTECTOR ASSY		
36.	507-039D	GAUGE PROTECTOR BOTTOM		
37.	818-344C	DECAL NOTICE GAUGE PROTECTOR		
38.	816-144C	DIAPHRAGM - GAUGE PROTECTOR		
39.	507-040D	GAUGE PROTECTOR TOP		
40.	801-071C	SRHMS 5-40X5/8 SS		
41.	830-126C	EL 1MNPT X 3/4HB POLYPROP		
42.	990-080R	HOSE 3/8 ID 150PSI EPDM		
43.	802-034C	HHCS 1/2-13X1 1/4 GR5		
44.	803-088C	NUT HEX LOCK 1/4-20 FLG		
45.	806-152C	U-BOLT 1/4-20 X 1.125 X 2 RND		
46.	803-177C	NUT HEX FLG TP LK 5/16-18ZNYCR		
47.	806-192C	U-BOLT 5/16-18X1 1/2X2 1/2 RND		
48.	804-016C	WASHER FLAT 1/2 SAE PLT		
49.	990-081R	HOSE 3/4 ID 200PSI EPDM		
50.	830-085C	AD 3/4MNPT X 1HB POLYPROP		
51.	830-043C	AD 1MNPT POLYPROP		

Fertilizer Plumbing (continued)

(Applies to YP40 only)

Ref	Part No.	Part Description	Comments	Revision
52.	990-109R	TUBE NYLON 1/4OD X 062WL		
53.	830-383C	CP 1/4 PUSH LOK POLY		
54.	804-015C	WASHER LOCK SPRING 1/2 PLT		
55.	800-125C	CLAMP WRM DRV#28 SS(1.31-2.25)		
56.	808-062C	SPKT 40B15 X 1 B W/KW & SS		
57.	407-171D	FERT VALVE MNT		
58.	803-020C	NUT HEX 1/2-13 PLT		
59.	830-158C	AD 3/4FNPT POLYPROP		
60.	CP18999-EPR	ORIFICE SEAT STYLE GASKET		
61.	804-006C	WASHER LOCK SPRING 1/4 PLT		
62.	803-006C	NUT HEX 1/4-20 PLT		
63.	403-596D	BRACKET, FERTILIZER GAGE		
64.	802-159C	HHCS 5/16-18X1 GR5		
65.	804-009C	WASHER LOCK SPRING 5/16 PLT		
66.	803-008C	NUT HEX 5/16-18 PLT		

Fertilizer Plumbing (continued)

(Applies to YP40 only)

This Page Intentionally Left Blank

Rear Fertilizer Plumbing Mount

(Applies to YP40 only)

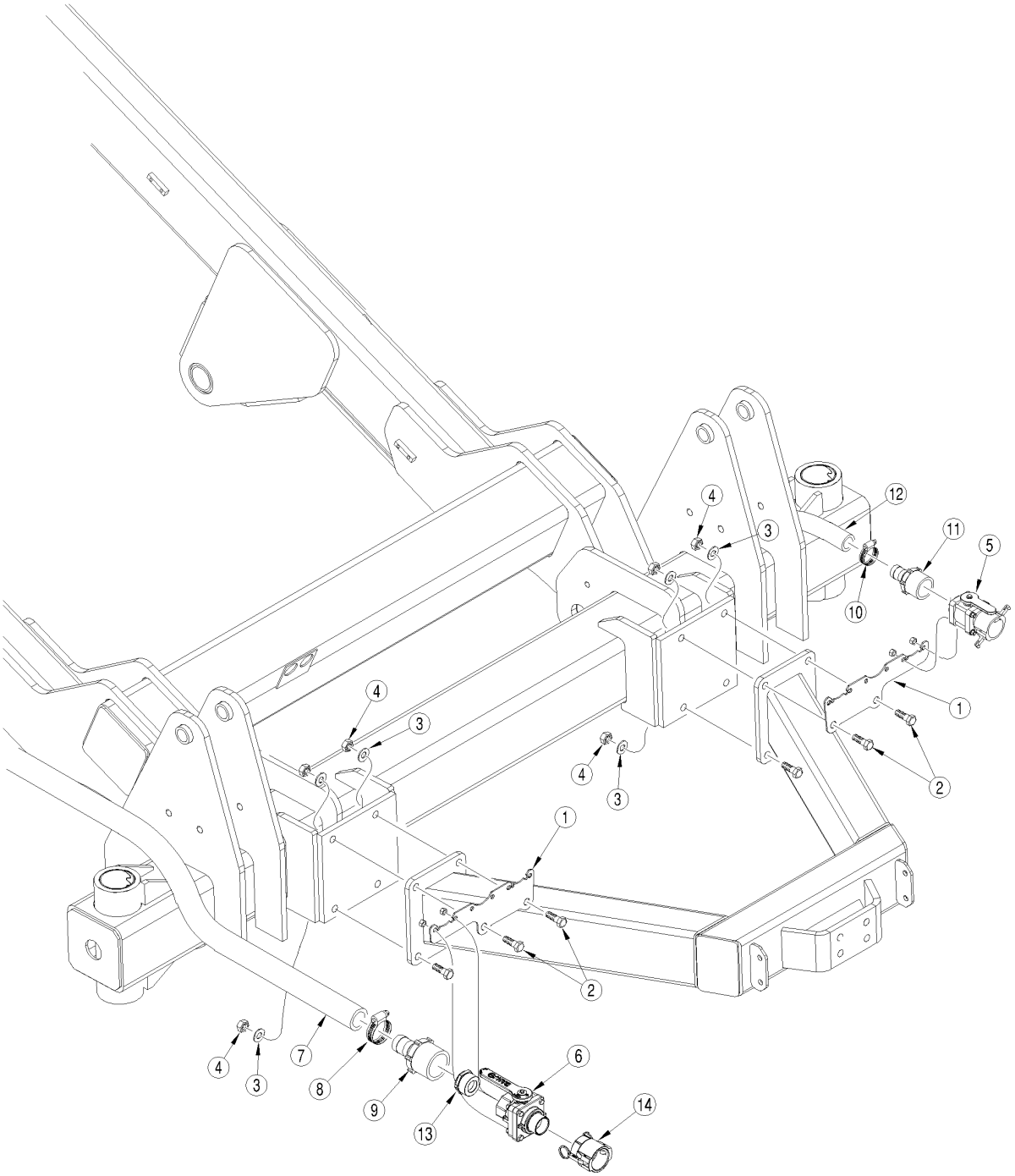

29310

Rear Fertilizer Plumbing Mount

(Applies to YP40 only)

Ref.	Part No.	Part Description	Comments	Revision
	dwg29310	Image No.		
1.	407-279D	FERT VALVE HOOKUP MOUNT		
2.	802-055C	HHCS 5/8-11X2 GR5		
3.	804-022C	WASHER LOCK SPRING 5/8 PLT		
4.	803-021C	NUT HEX 5/8-11 PLT		
5.	829-010C	VALVE - 3/4FNPT BALL POLYPROP	Refer to "Ball Valve Assembly (829-010C)" for breakdown	
6.	829-109C	VALVE - 2MNPT X 2FNPT FP POLYP	Items 13 (830-149C) & 14 (830-174C) must be ordered when replacing 829-109C.	
7.	990-082R	HOSE 1 ID 200PSI EPDM		
8.	800-123C	CLAMP WRM DRV #16 SS (.68-1.5)		
9.	830-254C	AD 1 1/2MNPT X 1HB POLYPROP		
10.	800-126C	CLAMP WRM DRV #5 SS (.44-.70)		
11.	830-082C	AD 3/4MNPT X 3/8HB POLYPROP		
12.	990-080R	HOSE 3/8 ID 150PSI EPDM		
13.	830-149C	AD 2MNPT X 1 1/2FNPT POLYPROP		
14.	830-174C	AD 2FNPT X 2FCL POLYPROP		

John-Blue Pump (831-068C)

(Applies to YP40 only)

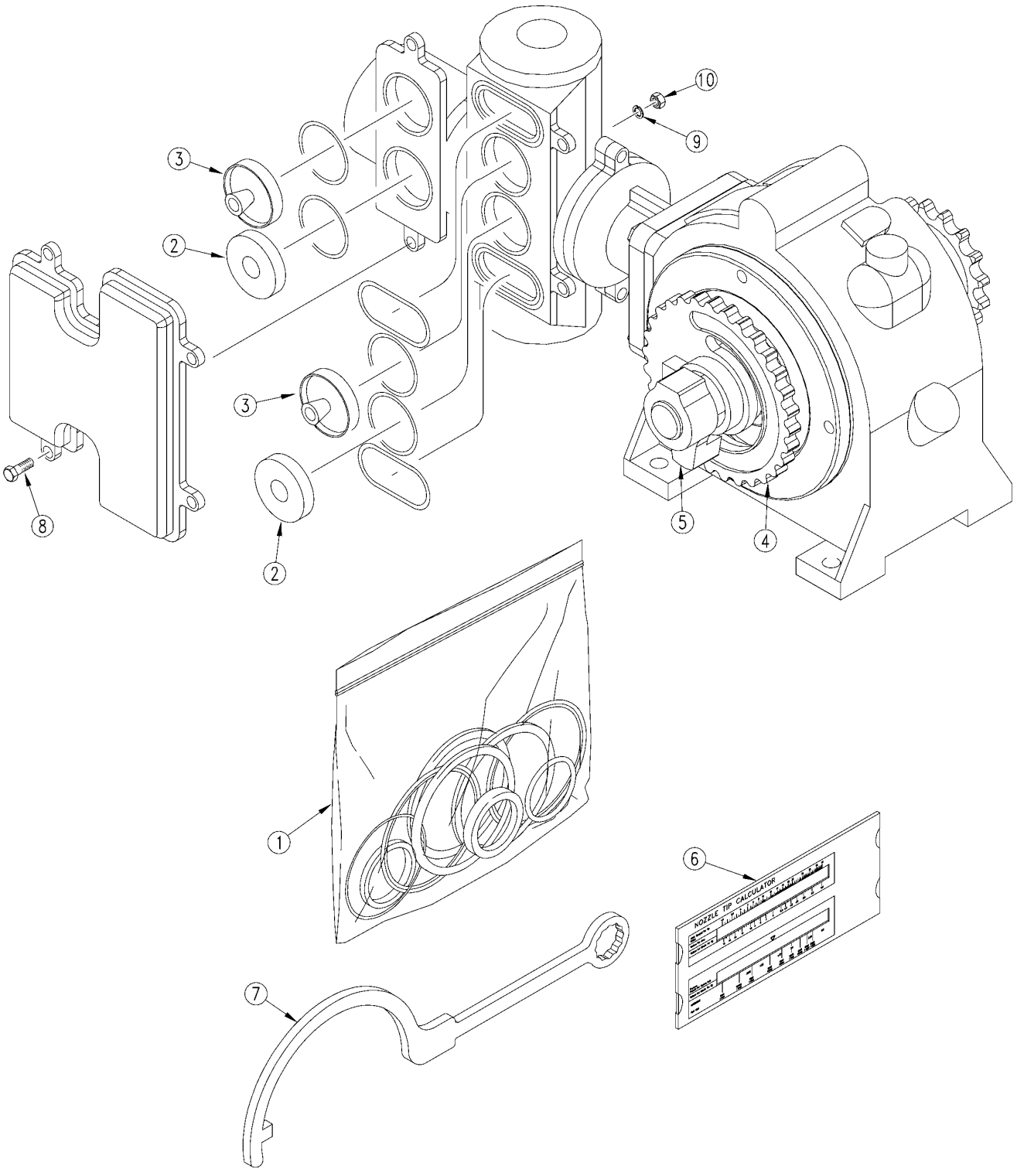

28428

John-Blue Pump (831-068C)

(Applies to YP40 only)

Ref.	Part No.	Part Description	Comments	Revision
	dwg28428	Drawing Image Number		
1.	115788	JOHN BLUE REPAIR KIT--831-068C		
2.	115606-91	SUCTION VALVE FOR JB 831-068C		
3.	115607-91	DISCHARGE VLVE FOR JB 831-068C		
4.	115627-01	SETTING HUB		
5.	115628-01	SETTING POINTER FOR JB PUMP		
6.	115698-91	CHART ASY PUMP SETTING		
7.	115631-01	JB SETTING WRENCH		
8.	802-022C	HHCS 3/8-16X1 1/2 GR5		
9.	804-013C	WASHER LOCK SPRING 3/8 PLT		
10.	803-014C	NUT HEX 3/8-16 PLT		

Banjo Strainer (831-029C)

(Applies to YP40 only)

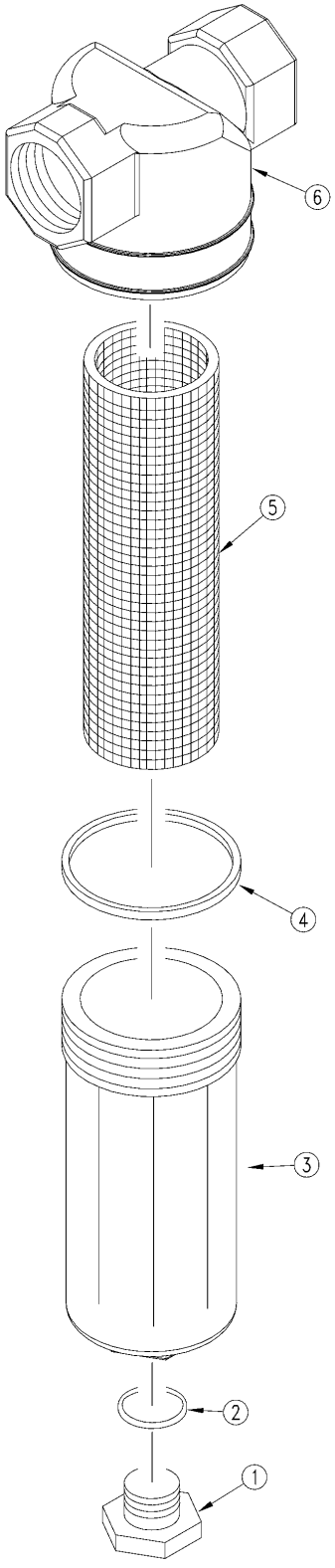

18418

Banjo Strainer (831-029C)

(Applies to YP40 only)

Ref.	Part No.	Part Description	Comments	Revision
	dwg18418	Image No.		
1.	LSQ200-PL	PLUG FOR STRAINER 831-029C		
2.	LSQ200-R	BANJO GASKET/O-RING		
3.	LST150-B	BOWL FOR 831-029C		
4.	LST150-G	GASKET FOR 831-029C		
5.	LST1580	SCREEN FOR STRAINER 831-029C		
6.	LST150-H	HEAD FOR 831-029C		

Ball Valve Assembly (829-010C)

(Applies to YP40 only)

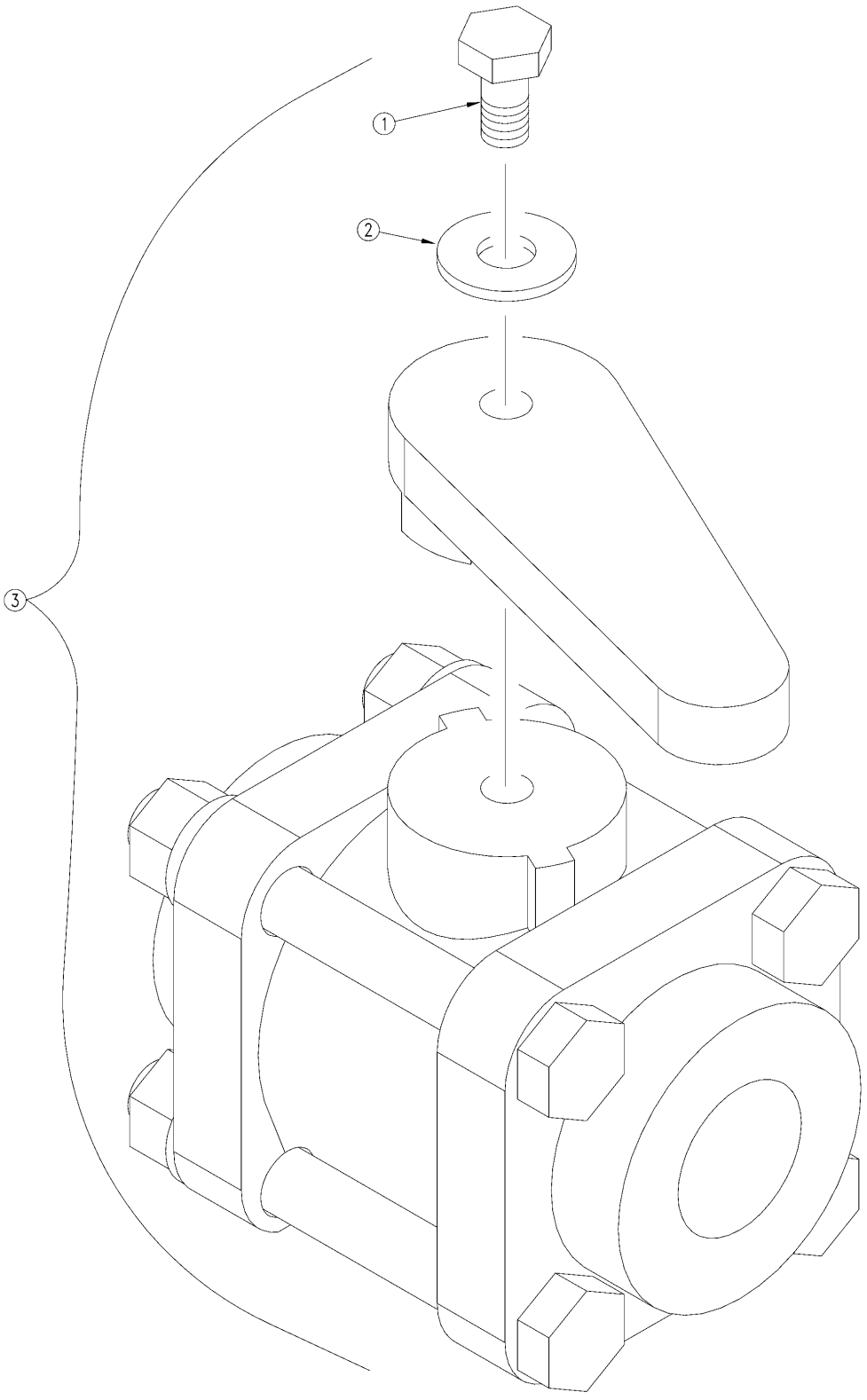

25495

Ball Valve Assembly (829-010C)

(Applies to YP40 only)

Ref.	Part No.	Part Description	Comments	Revision
	dwg25495	Image No.		
1.	802-301C	HHCS 1/4-20X1/2 GR5		
2.	804-075C	WASHER FLAT 1/4 USS PLT		
3.	829-010C	VALVE - 3/4FNPT BALL POLYPROP		

Ball Valve Assembly (829-048C)

(Applies to YP40 only)

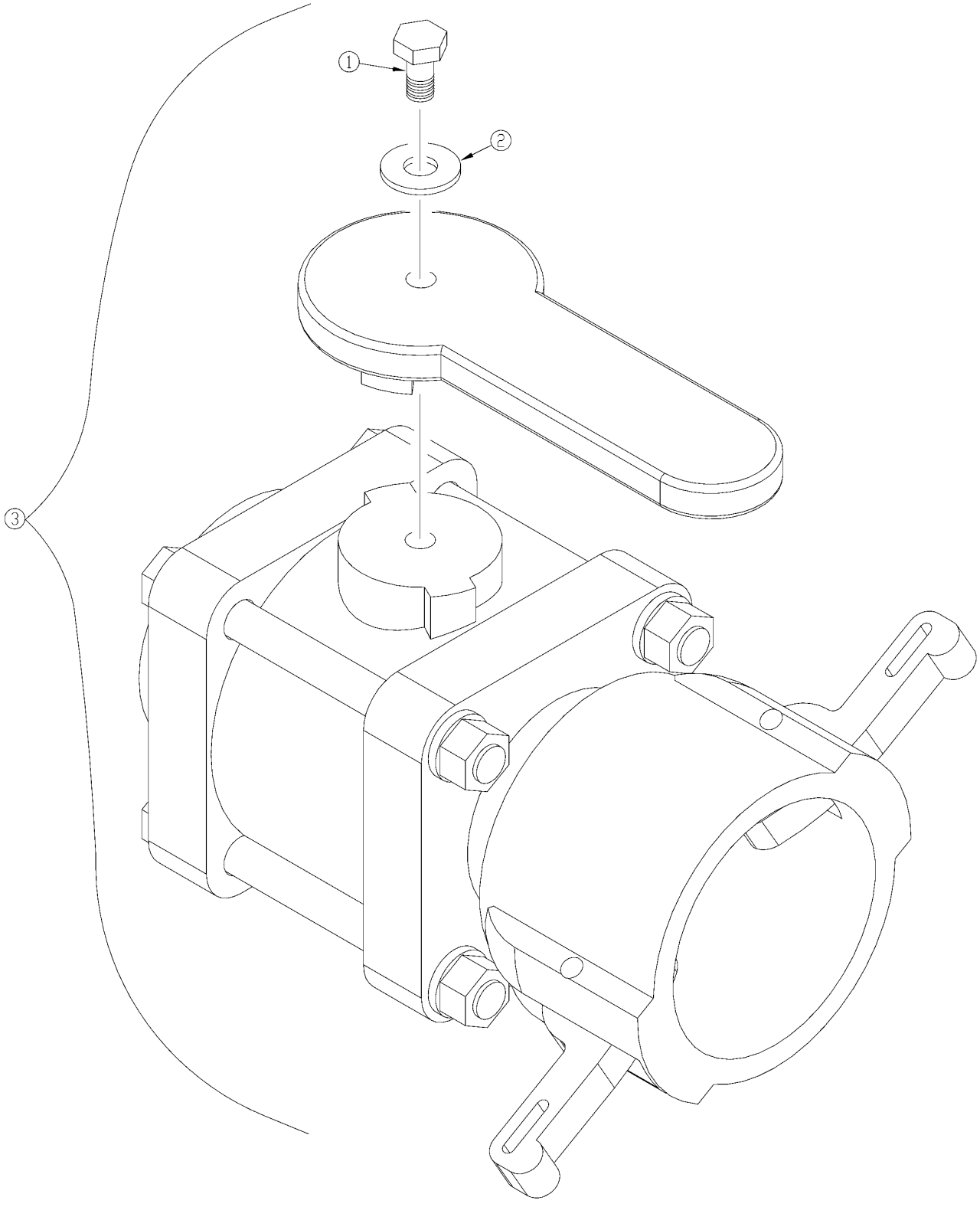

25494

Ball Valve Assembly (829-048C)

(Applies to YP40 only)

Ref.	Part No.	Part Description	Comments	Revision
	dwg25494	Image No.		
1.	802-301C	HHCS 1/4-20X1/2 GR5		
2.	804-075C	WASHER FLAT 1/4 USS PLT		
3.	829-048C	VALVE - 1 1/2FNPT X 2FCL POLYP		

Banjo Strainer (831-078C)

(Applies to YP40 only)

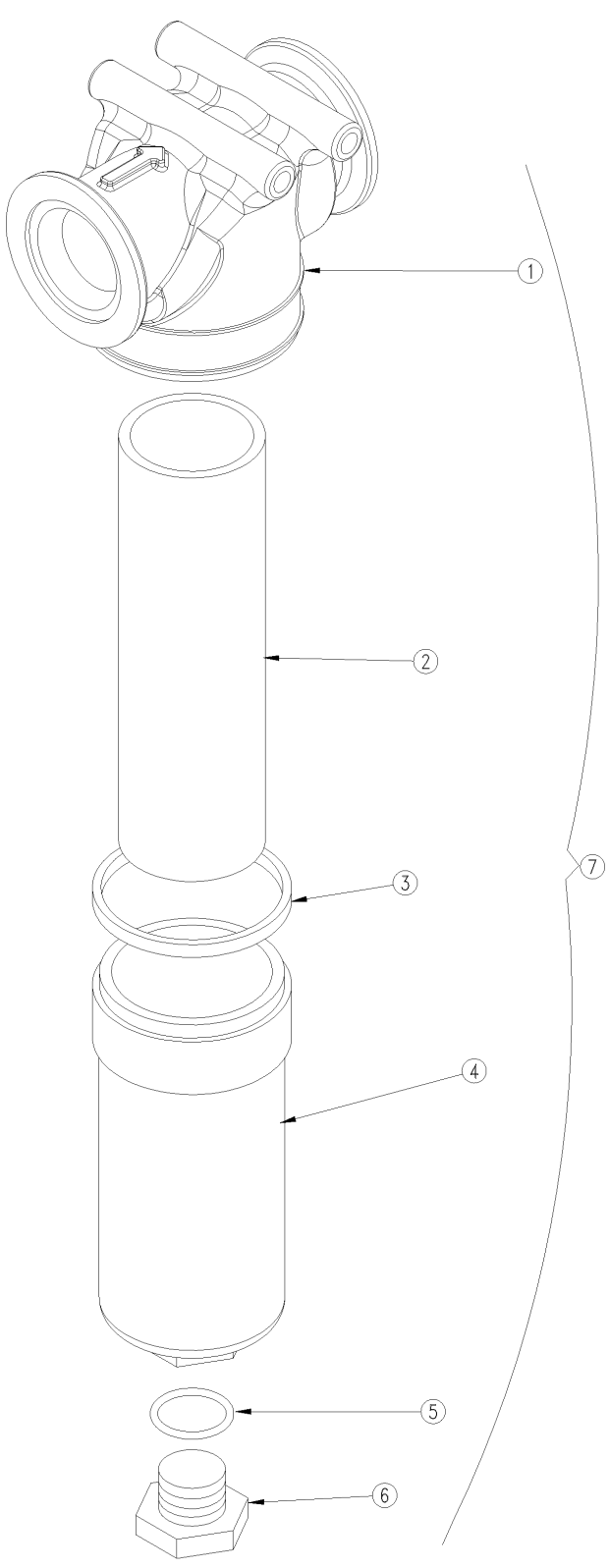

38352

Banjo Strainer (831-078C)

(Applies to YP40 only)

Ref.	Part No.	Part Description	Comments	Revision
	dwg 38352	Image No.		
1.	MLST150-H	HEAD FOR BANJO 831-078C		
2.	LST1580	SCREEN FOR STRAINER 831-029C		
3.	LST150-G	GASKET FOR 831-029C		
4.	LST150-B	BANJO 1 1/2 FLG T-STRAIN BOWL		
5.	LSQ200-R	BANJO GASKET/O-RING		
6.	LSQ200-PL	PLUG FOR BANJO 831-078C		
7.	831-078C	STRAINER BANJO MLST150-80 MESH	Includes 1 - 6	

Hydraulic Connections

(Applies to YP40 only)

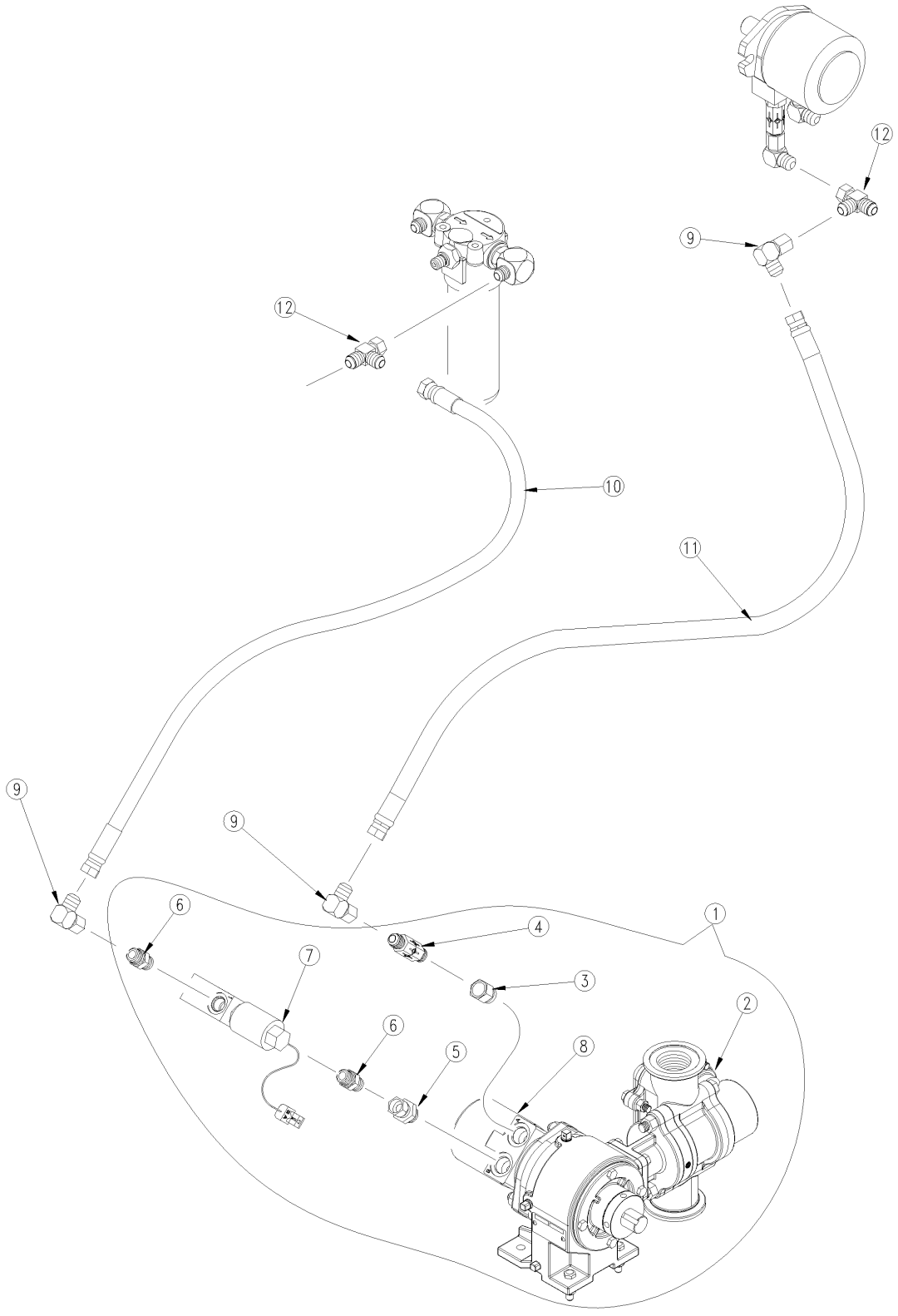

38370

Hydraulic Connections

(Applies to YP40 only)

Ref.	Part No.	Part Description	Comments	Revision
	dwg 38370	Image No.		
1.	417-833V	VARIABLE RATE FERT PUMP ASM	Includes 2 - 8	
2.	831-121C	JOHN BLUE NGP-6055-HYF		
3.	811-564C	AD 3/4FORB 7/8MORB		
4.	810-696C	VALVE INLINE CHECK W/ ORIFICE		
5.	811-502C	AD 7/8MORB 3/4FJIC		
6.	811-088C	AD 3/4MORB 3/4MJIC		
7.	861-463C	PRESSURE COMP PWM VALVE		
8.	850-154C	HYD MOTOR 4.9CIR SAE A MNT		
9.	811-150C	EL 3/4FJIC 3/4MJIC		
10.	811-715C	HH1/2R2 097 3/4FJIC		
11.	841-578C	HH1/2R2 090 3/4FJIC		
12.	811-073C	TE 3/4MJIC 3/4MJIC 3/4FJIC		

Hydraulic Pump Mounting

(Applies to YP40 only)

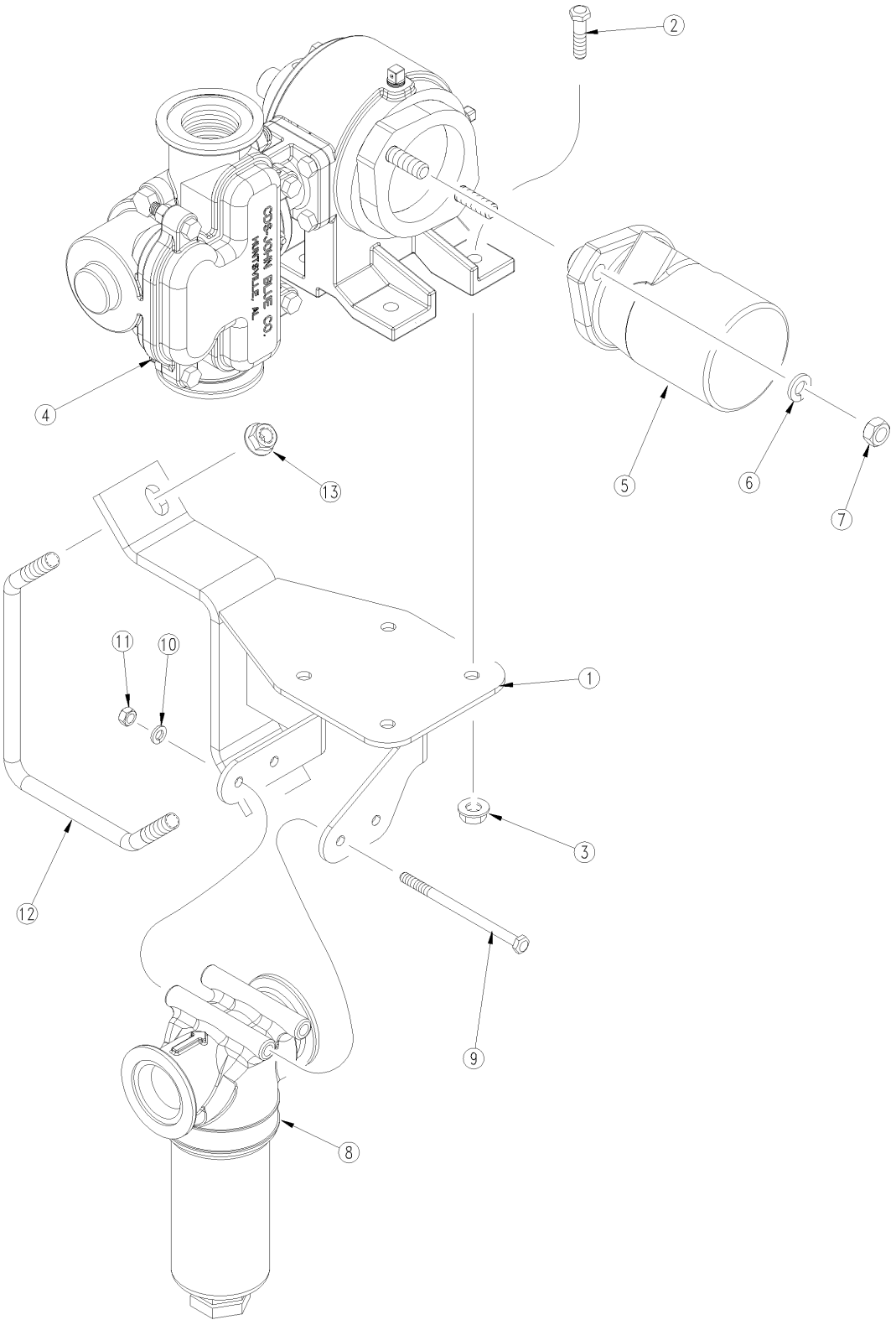

38368

Hydraulic Pump Mounting

(Applies to YP40 only)

Ref.	Part No.	Part Description	Comments	Revision
	dwg 38368	Image No.		
1.	417-837H	YP 3SEC HYD FERT PUMP MNT		
2.	802-022C	HHCS 3/8-16X1 1/2 GR5		
3.	803-086C	NUT MAC-LOK FLG 3/8-16 GR F		
4.	417-833V	VARIABLE RATE FERT PUMP ASM		
5.	850-154C	HYD MOTOR 4.9CIR SAE A MNT		
6.	804-015C	WASHER LOCK SPRING 1/2 PLT		
7.	803-020C	NUT HEX 1/2-13 PLT		
8.	831-078C	STRAINER BANJO MLST150-80 MESH	See "Banjo Strainer (831-078C)" for breakdown.	
9.	802-578C	HHCS 5/16-18X5 GR5		
10.	804-009C	WASHER LOCK SPRING 5/16 PLT		
11.	803-008C	NUT HEX 5/16-18 PLT		
12.	806-139C	U-BOLT 1/2-13 CORNER 5 X 7		
13.	803-037C	NUT HEX WHIZ 1/2-13 PLT		

Plumbing for Liquid Fertilizer

(Applies to YP40 only)

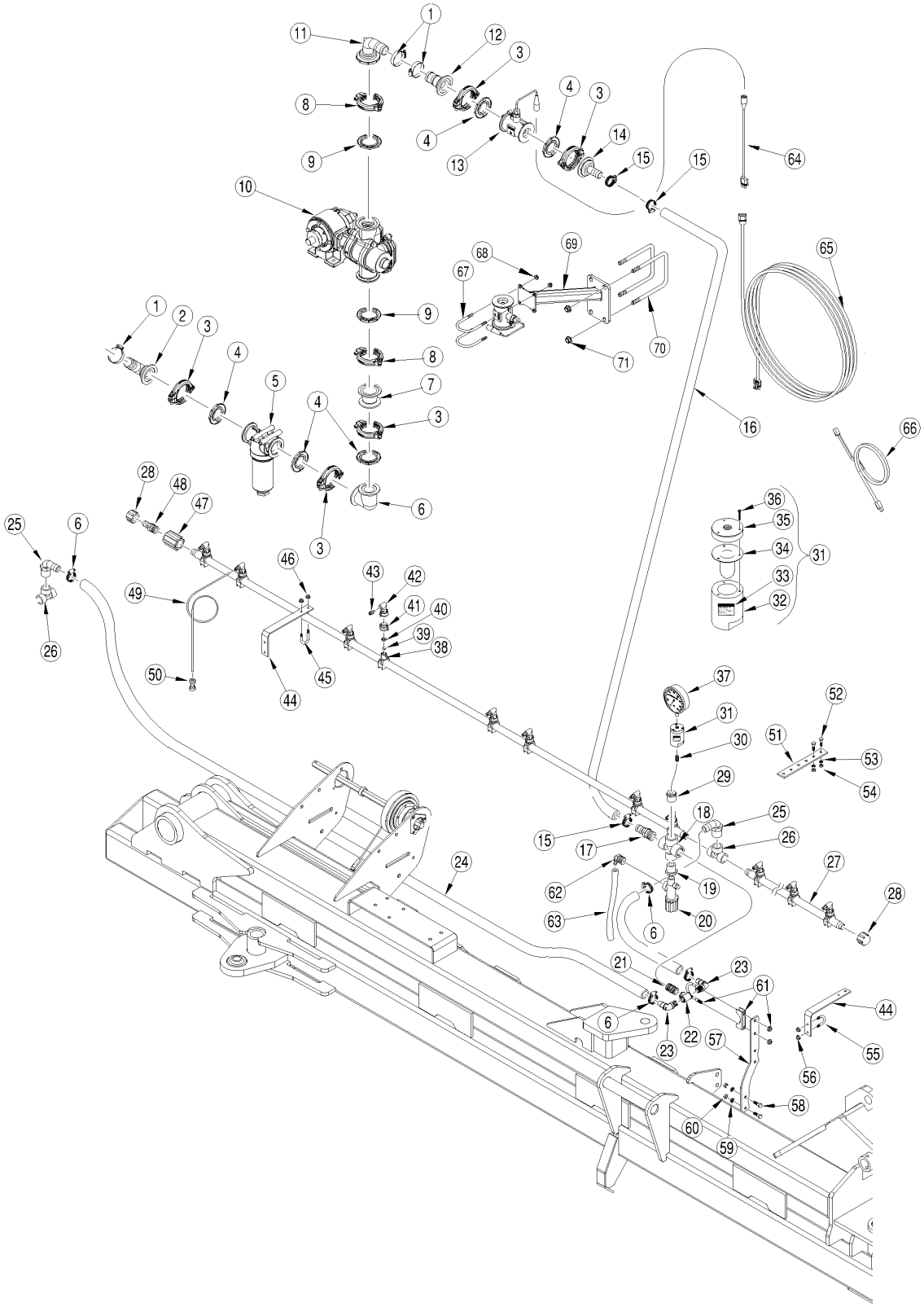

38372

Plumbing for Liquid Fertilizer

(Applies to YP40 only)

Ref.	Part No.	Part Description	Comments	Revision
	dwg 38372	Image No.		
1.	800-125C	CLAMP WRM DRV#28 SS(1.31-2.25)		
2.	830-325C	EL 1 1/2 FLANGE X 1 1/2HB POLY		
3.	830-459C	CLAMP 1 1/2 FLANGE HYPRO		
4.	830-462C	GASKET 1 1/2 FLANGE HYPRO		
5.	831-078C	STRAINER BANJO MLST150-80 MESH	Refer to "Banjo Strainer (831-078C)" for breakdown.	
6.	830-157C	EL 1 1/2 FLANGE SHORT POLY		
7.	830-390C	AD 2FP FLG X 2SP FLG POLY		
8.	830-460C	CLAMP 2 FLANGE HYPRO		
9.	830-463C	GASKET 2 FLANGE HYPRO		
10.	417-833V	VARIABLE RATE FERT PUMP ASM		
11.	830-368C	EL 2FP FLANGE X 1 1/2HB POLY		
12.	830-345C	AD 2"FLANGE X 1 1/2 HB		
13.	823-435C	RAVEN RFM-15 FLOWMETER		
14.	830-370C	AD 1 1/2 FLANGE X 1 HB POLY		
15.	800-123C	CLAMP WRM DRV #16 SS (.68-1.5)		
16.	990-082R	HOSE 1 ID 200PSI EPDM		
17.	830-087C	AD 1MNPT X 1HB POLYPROP		
18.	830-237C	CR 1FNPT		
19.	830-142C	AD 1MNPT X 3/4FNPT POLYPROP		
20.	829-105C	VALVE RELIEF 0-150 PSI POLYP		
21.	830-043C	AD 1MNPT POLYPROP		
22.	830-029C	TEE 1FNPT POLYPROP		
23.	830-126C	EL 1MNPT X 3/4HB POLYPROP		
24.	990-081R	HOSE 3/4 ID 200PSI EPDM		
25.	830-123C	EL 3/4MNPT X 3/4HB POLYPROP		
26.	830-028C	TEE 3/4FNPT POLYPROP		
27.	407-134D	MANIFOLD 40 FT TWIN ROW		
27.	407-140D	MANIFOLD 30 FOOT TWIN ROW		
28.	830-061C	CA 3/4FNPT POLYPROP		
29.	830-258C	AD 1MNPT X 1/4FNPT POLYPROP		
30.	830-260C	AD 1/4MNPT SCH 40 X 2 304SS		
31.	507-034V	GAUGE PROTECTOR ASSY	Includes 32 - 36	
32.	507-039D	GAUGE PROTECTOR BOTTOM		
33.	818-344C	DECAL NOTICE GAUGE PROTECTOR		
34.	816-144C	DIAPHRAGM - GAUGE PROTECTOR		
35.	507-040D	GAUGE PROTECTOR TOP		
36.	801-071C	SRHMS 5-40X5/8 SS		
37.	829-104C	GAUGE 100 PSI 4IN STAINLESS ST		
38.	829-089C	NOZZLE BODY 3/4 WET BOOM CLAMP		
39.	832-054C	ORIFICE SPR SYS CP4916-48 SS		
39.	832-052C	ORIFICE SPR SYS CP4916-20 SS		
39.	832-053C	ORIFICE SPR SYS CP4916-34 SS		
39.	832-056C	ORIFICE SPR SYS CP4916-28 SS		
39.	832-055C	ORIFICE SPR SYS CP4916-80 SS		
40.	CP18999-EPR	ORIFICE SEAT STYLE GASKET		
41.	832-042C	NOZZLE SHUT OFF CAP W/ GASKET		
42.	832-051C	NOZZLE CAP QUICK X 90X1/4 FNPT		
43.	800-367C	AD PUSH 1/4TUBEX1/4MNPT		
44.	407-380D	OUTSIDE BOOM SUPPORT		
45.	806-152C	U-BOLT 1/4-20 X 1.125 X 2 RND		
46.	803-088C	NUT HEX LOCK 1/4-20 FLG		
47.	830-158C	AD 3/4FNPT POLYPROP		
48.	830-085C	AD 3/4MNPT X 1HB POLYPROP		
49.	990-109R	TUBE NYLON 1/4OD X 062WL		
50.	830-383C	CP 1/4 PUSH LOK POLY		
51.	403-595D	BOLT TAB 1/2 AND 5/8		

Plumbing for Liquid Fertilizer (continued)

(Applies to YP40 only)

Ref	Part No.	Part Description	Comments	Revision
52.	802-005C	HHCS 1/4-20X1 GR5		
53.	804-006C	WASHER LOCK SPRING 1/4 PLT		
54.	803-006C	NUT HEX 1/4-20 PLT		
55.	806-192C	U-BOLT 5/16-18X1 1/2X2 1/2 RND		
56.	803-177C	NUT HEX FLG TP LK 5/16-18ZNYCR		
57.	403-596D	BRACKET, FERTILIZER GAGE		
58.	802-159C	HHCS 5/16-18X1 GR5		
59.	804-009C	WASHER LOCK SPRING 5/16 PLT		
60.	803-008C	NUT HEX 5/16-18 PLT		
61.	890-521C	MUFFLER CLAMP 1.63 SIZE		
62.	830-121C	EL 3/4MNPT X 3/8HB POLYPROP		
63.	990-080R	HOSE 3/8 ID 150PSI EPDM		
64.	466980040S1	DJ RAVEN FLOW MTR AD CABLE		
65.	843-057C	HARNESS, EXT, 3PIN WP, 10'		
66.	823-434C	HARNESS EXT. 10' 2 PIN WP		
67.	806-196C	U-BOLT 5/16-18X2 7/16X3.75 RND		
68.	803-199C	NUT HEX FLANGE 5/16-18 PLT		
69.	431-078H	FLOW-METER STAND		
70.	806-221C	U-BOLT 1/2-13 X 5 1/32 X 6 1/2		
71.	803-169C	NUT HEX FLG LOCK 1/2-13 PLT		

Plumbing for Liquid Fertilizer (continued)

(Applies to YP40 only)

This Page Intentionally Left Blank

Dry Fertilizer Bin Assembly

(Applies to YP40 only)

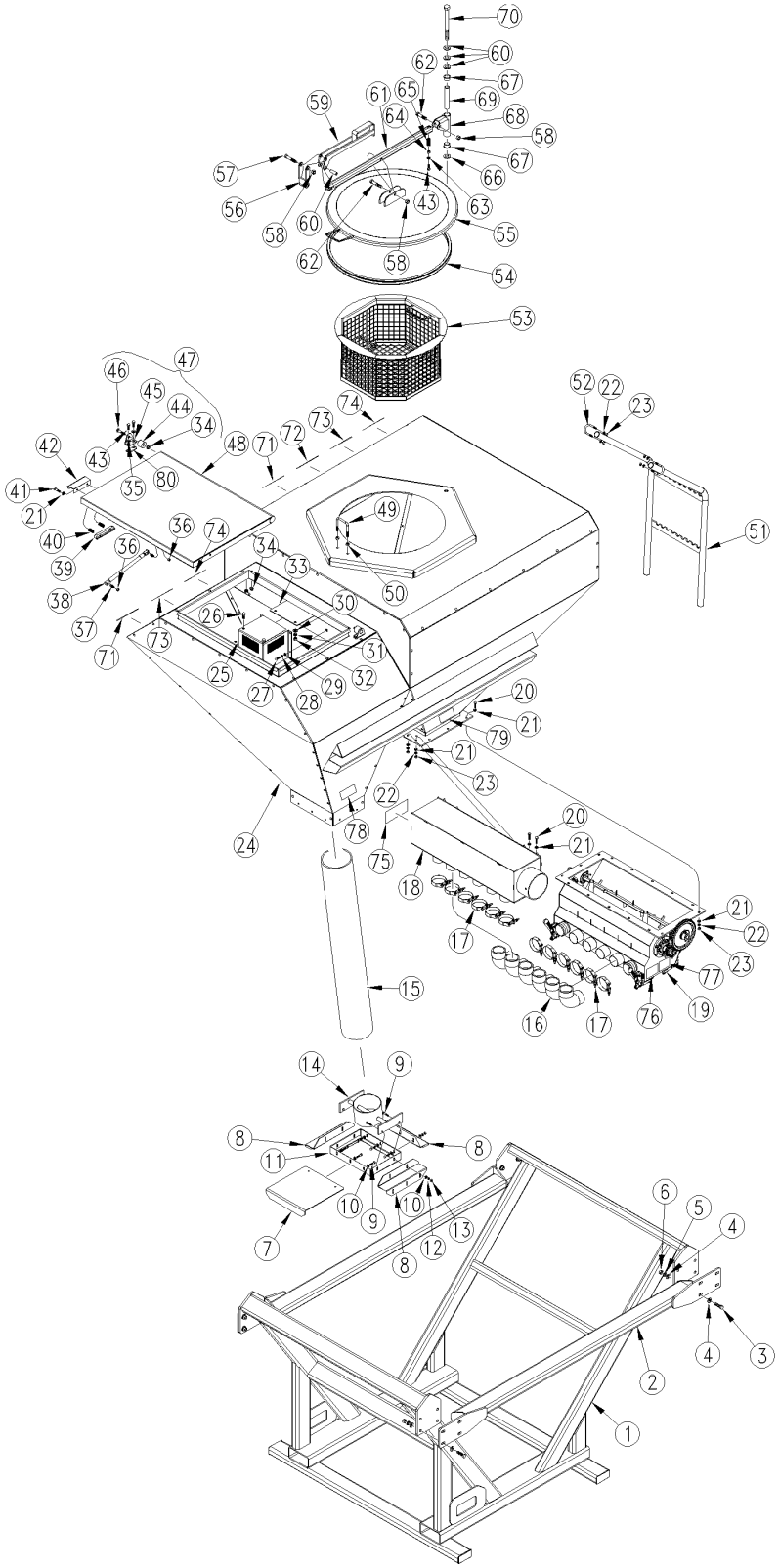

29718

Dry Fertilizer Bin Assembly

(Applies to YP40 only)

Ref.	Part No.	Part Description	Comments	Revision
	dwg29718	Image No.		
1.	403-259H	HOPPER SUPPORT FRAME		
2.	403-262H	BIN SIDE SUPPORT WELDMENT		
3.	802-082C	HHCS 1/2-13X1 3/4 GR5		
4.	804-016C	WASHER FLAT 1/2 SAE PLT		
5.	804-015C	WASHER LOCK SPRING 1/2 PLT		
6.	803-020C	NUT HEX 1/2-13 PLT		
7.	403-234D	BULK HOPPER UNLOAD DOOR		
8.	403-473D	HOPPER FRONT SEAL FLAP		
9.	802-224C	HHCS 1/4-20X1 1/4 GR5		
10.	804-007C	WASHER FLAT 1/4 SAE PLT		
11.	403-159H	BULK HOPPER UNLOAD DOOR GUIDE		
12.	804-006C	WASHER LOCK SPRING 1/4 PLT		
13.	803-006C	NUT HEX 1/4-20 PLT		
14.	403-268H	LOWER AIR PIPE SUPPORT DF YP		
15.	403-474D	HOPPER AIR TUBE		
16.	816-617C	2.5" ELBOW		
17.	800-180C	2 1/2 AIR HOSE BAND CLAMP		
18.	403-277H	AIR DISTRIBUTION BOX WELDMENT		
19.	403-290K	YP40 DF METER ASSEMBLY	Refer to Dry Fertilizer Meter Assembly for breakdown	
20.	802-010C	HHCS 5/16-18X1 1/4 GR5		
21.	804-036C	WASHER FLAT 5/16 SAE PLT		
22.	804-009C	WASHER LOCK SPRING 5/16 PLT		
23.	803-008C	NUT HEX 5/16-18 PLT		
24.	403-266H	BIN WELDMENT		
25.	403-408D	AIR TRANSFER TUBE CAP		
26.	802-080C	HHCS 7/16-14X1 GR5		
27.	802-005C	HHCS 1/4-20X1 GR5		
28.	804-006C	WASHER LOCK SPRING 1/4 PLT		
29.	804-007C	WASHER FLAT 1/4 SAE PLT		
30.	804-041C	WASHER FLAT 7/16 SAE PLT		
31.	804-014C	WASHER LOCK 7/16 PLT		
32.	803-015C	NUT HEX 7/16-14 PLT		
33.	816-245C	RUBBER GUARD REAR CTR.OUTER		
34.	803-209C	NUT FLANGE LOCK 3/8-16 PLT		
35.	804-012C	WASHER FLAT 3/8 SAE PLT		
36.	803-011C	NUT LOCK 5/16-18 PLT		
37.	800-121C	BALL STUD 10MM X 5/16-18 UNC		
38.	890-221C	12-20 x 90 LB GAS SPRING		
39.	817-805C	LID LATCH		
40.	807-106C	SPRING .540 O.D.X 1 1/4 X.054W		
41.	802-425C	HHCS 5/16-18X1 1/4 NYL		
42.	119-154D	LID HANDLE		
43.	802-017C	HHCS 3/8-16X1 GR5		
44.	313-186D	LID HINGE PIVOT		
45.	313-176D	LID HINGE BASE PLATE		
46.	802-411C	RHSNB 3/8-16X2 GR5		
47.	175-180S	13' EW LID HINGE ASSEMBLY	Contains 34, 44-46, 80	
48.	403-263H	LID		
49.	806-077C	U-BOLT 3/8-16 X 2 5/8 X 3 1/4		
50.	803-014C	NUT HEX 3/8-16 PLT		
51.	403-269H	LADDER WELDMENT		
52.	806-192C	U-BOLT 5/16-18X1 1/2X2 1/2 RND		
53.	167-123H	STRAINER BASKET WELDMENT		
54.	167-285D	ADC2350 BIN LID SEAL		
55.	167-016H	ROUND BIN LID WELDMENT		
56.	167-035H	AIR DRILL BIN LID HOOK		

Dry Fertilizer Bin Assembly (continued)

(Applies to YP40 only)

Ref	Part No.	Part Description	Comments	Revision
57.	802-226C	HHCS 1/2-13X2 3/4 GR5		
58.	803-147C	NUT HEX NYLOCK 1/2-13		
59.	167-048H	AIR DRILL BIN LID HANDLE WLMNT		
60.	805-169C	PIN ROLL 1/2 X 1 3/4		
61.	167-283D	BIN LID TOP CROSS BAR		
62.	802-038C	HHCS 1/2-13X2 1/4 GR5		
63.	804-013C	WASHER LOCK SPRING 3/8 PLT		
64.	803-014C	NUT HEX 3/8-16 PLT		
65.	807-268C	SPRING COMP DIE.75X.375X1.50L		
66.	804-025C	WASHER FLAT 3/4 SAE PLT		
67.	817-129C	FLNG BUSHING 1 1/8 X 1 X 3/4		
68.	167-020H	LID SWIVEL WELDMENT		
69.	167-282D	LID SWIVEL INNER PIVOT TUBE		
70.	802-469C	HHCS 3/4-10X8 GR5 PLT		
71.	848-503C	DECAL BIN AIR LEAK PICTURE		
72.	848-519C	DECAL PIC CONFINED SPACES		
73.	848-520C	DECAL PIC CHEMICAL		
74.	848-510C	DECAL PIC EYE PROTECTION		
75.	848-509C	DECAL PIC MOVING CHAIN		
76.	848-501C	DECAL CALIBRATION DOOR PICTURE		
77.	848-502C	DECAL CLEAN OUT DOOR PICTURE		
78.	848-522C	DECAL PIC MOVING GEARS		
79.	848-500C	DECAL METER GEAR RANGE PICTURE		
80.	816-805C	LID HINGE BASE GASKET		

Dry Fertilizer Bin Assembly (continued)

(Applies to YP40 only)

This Page Intentionally Left Blank

Dry Fertilizer Delivery

(Applies to YP40 only)

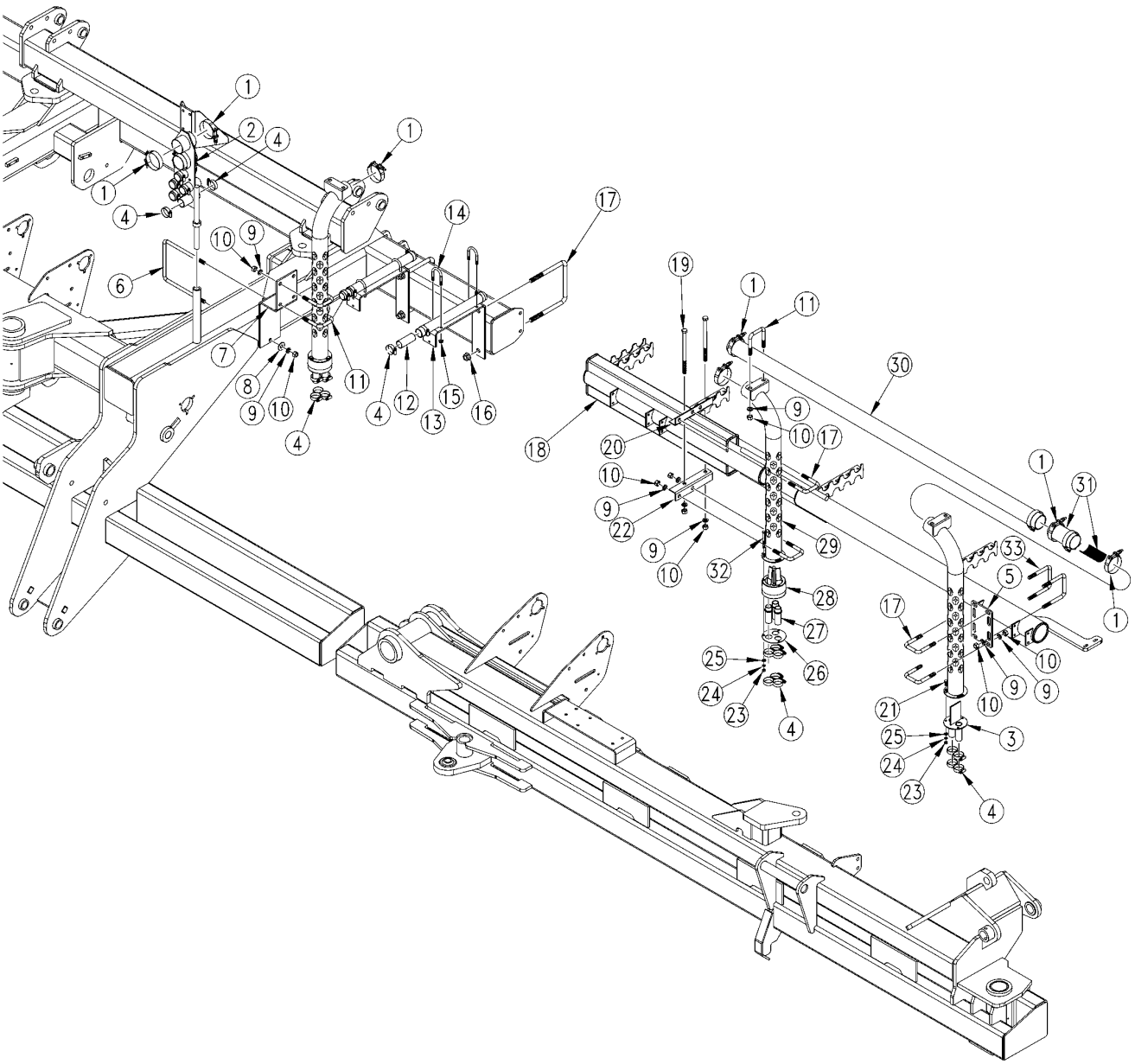

29723

Dry Fertilizer Delivery

(Applies to YP40 only)

Ref.	Part No.	Part Description	Comments	Revision
	dwg29723	Image No.		
1.	800-180C	2 1/2 AIR HOSE BAND CLAMP		
2.	407-247H	HOSE GUIDE WELDMENT W/FERT		
3.	407-248H	2 WAY SPLITTER WELDMENT		
4.	800-124C	CLAMP WRM DRV #24 SS (1.06-2)		
5.	407-354D	TOWER MOUNT		
6.	806-026C	U-BOLT 1/2-13 X 7 1/32 X 8 1/4		
7.	407-356D	SPLITTER MOUNT BRACKET		
8.	804-017C	WASHER FLAT 1/2 USS PLT		
9.	804-015C	WASHER LOCK SPRING 1/2 PLT		
10.	803-020C	NUT HEX 1/2-13 PLT		
11.	806-010C	U-BOLT 1/2-13 X 2 1/2 X 3 1/2		
12.	403-306D	HOSE COUPLER 30 IN YP		
13.	403-361D	AIR TUBE HOLDER CENTER		
14.	806-192C	U-BOLT 5/16-18X1 1/2X2 1/2 RND		
15.	803-177C	NUT HEX FLG TP LK 5/16-18ZNYCR		
16.	803-263C	NUT HEX FLANGE LOCK 5/8-11 PLT		
17.	806-083C	U-BOLT 5/8-11 X 7 1/32 X 7 1/2		
18.	401-552H	WING AIR PIPE SUPPPORT 16		
19.	802-289C	HHCS 1/2-13X8 GR5		
20.	407-365D	SPLITTER MOUNT BRACKET		
21.	802-004C	HHCS 1/4-20X3/4 GR5		
22.	407-382D	SPLITTER MOUNT BOTTOM BRACKET		
23.	803-006C	NUT HEX 1/4-20 PLT		
24.	804-006C	WASHER LOCK SPRING 1/4 PLT		
25.	804-007C	WASHER FLAT 1/4 SAE PLT		
26.	407-357D	SPLITTER END PLATE		
27.	407-249H	SPLITTER TUBE WELDMENT		
28.	407-381D	3 WAY SPLITTER		
29.	407-246H	DISTRIBUTION TUBE WELDMENT		
30.	407-374D	2.5OD X .125 X 69 AL TUBING		
31.	407-223H	DF AIR RELEASE TUBE WELDMENT		
32.	802-274C	HHCS 1/4-20X3 GR5		
33.	806-002C	U-BOLT 1/2-13 X 3 17/32 X4 3/4		

Dry Fertilizer Fan Mounting

(Applies to YP40 only)

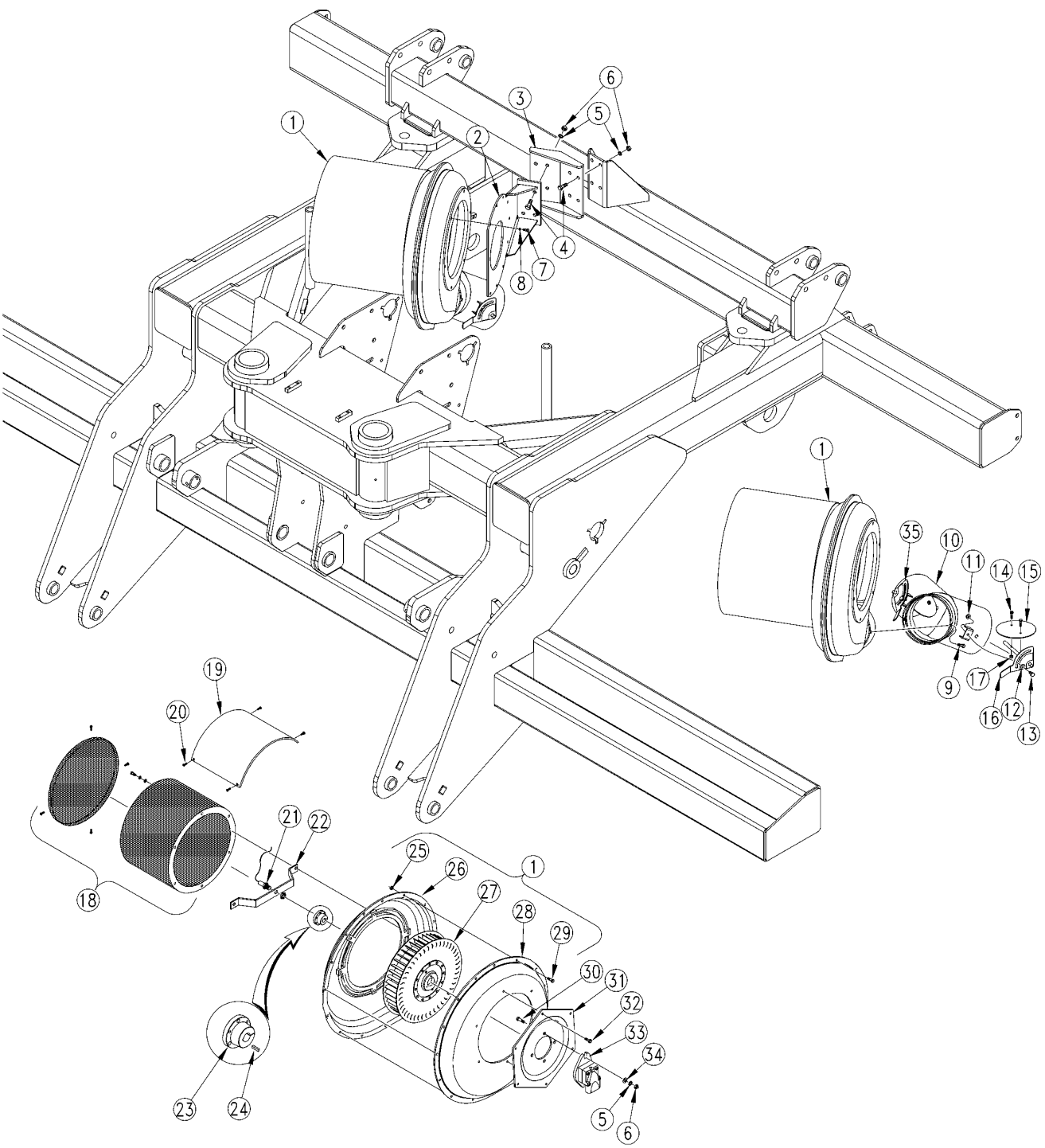

31005

Dry Fertilizer Fan Mounting

(Applies to YP40 only)

Ref.	Part No.	Part Description	Comments	Revision
	dwg31005	Image No.		
1.	890-395C	6 HYDRAULIC FAN KIT W/ SCREEN	Includes items 25-29	
2.	401-203H	YP FAN MOUNT WLDMNT		
3.	401-613H	FAN MOUNT WELDMENT		
4.	802-017C	HHCS 3/8-16X1 GR5		
5.	804-013C	WASHER LOCK SPRING 3/8 PLT		
6.	803-014C	NUT HEX 3/8-16 PLT		
7.	802-224C	HHCS 1/4-20X1 1/4 GR5		
8.	804-006C	WASHER LOCK SPRING 1/4 PLT		
9.	801-025C	SCREW HEX 5/16-12X3/4 THD FRM		
10.	403-245H	WELDED TUBE FAN SPLITTER		
11.	803-230C	NUT HEX FLANGE 1/4-20 PLT		
12.	804-007C	WASHER FLAT 1/4 SAE PLT		
13.	802-078C	HHCS 1/4-20X5/8 GR5		
14.	801-155C	HFS 10-24 X 3/4 PLT		
15.	411-030D	CRARY FAN SHUTTER DISK		
16.	403-244H	CRARY FAN SHUTTER LH		
17.	803-268C	NUT HEX NYLOCK 10-24 PLT		
18.	890-624C	SCREEN FAN COVER		
19.	817-624C	FAN INLET RAIN SHIELD		
20.	802-800C	HWH #12-14X3/4		
21.	466970014S1	DJ FAN RPM SENSOR THRD HALL		
22.	401-537D	DJ FAN SENSOR MOUNT BRKT		
23.	890-891C	BUSHING, JA X 20 MM		
24.	168-094D	HYD MOTOR 1/8 KEY		
25.	803-230C	NUT HEX FLANGE 1/4-20 PLT		
26.	21121	6 FAN HOUSING RH SIDE		
27.	17089	13 FAN IMPELLER		
28.	23320	6 FAN HOUSING LH SIDE		
29.	802-375C	HFSS 1/4-20X1 GR5		
30.	802-079C	HHCS 3/8-16X1 1/4 GR5		
31.	890-899C	VOLVO HYD MOTOR MOUNT PLT		
32.	801-081C	SCREW HEX SELF TAP 1/4-20X3/4		
33.	810-556C	PARKER F-11 FAN MOTOR		
34.	804-012C	WASHER FLAT 3/8 SAE PLT		
35.	401-363H	CRARY FAN SHUTTER		

Dry Fertilizer Ground Drive to Frame

(Applies to YP40 only)

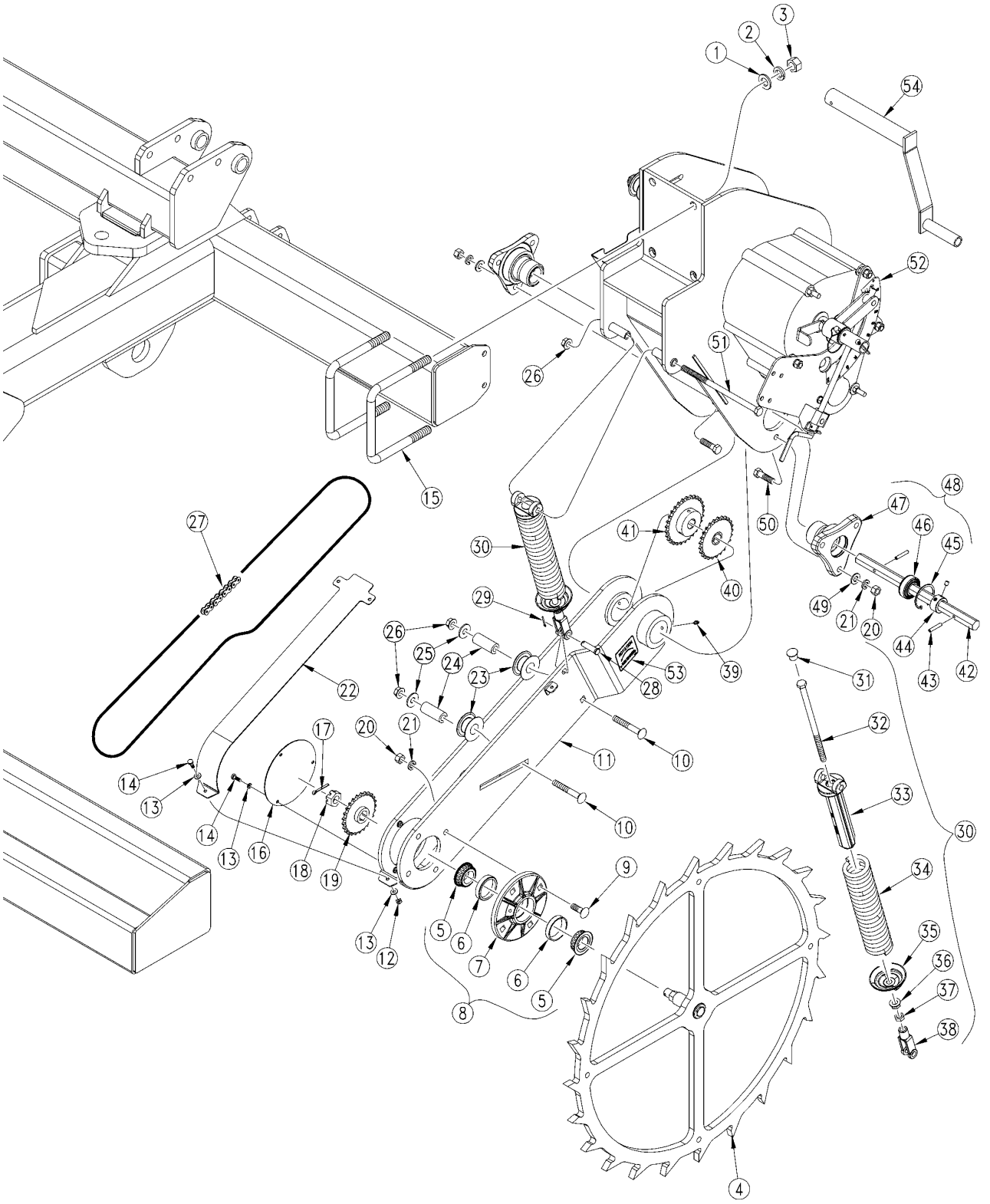

29749

Dry Fertilizer Ground Drive to Frame

(Applies to YP40 only)

Ref.	Part No.	Part Description	Comments	Revision
	dwg29749	Image No.		
1.	804-093C	WASHER FLAT 3/4 HARD ASTMF436		
2.	804-023C	WASHER LOCK SPRING 3/4 PLT		
3.	803-176C	NUT HEX 3/4-16 PLT		
4.	407-226H	FERT CONT WHL WLMT		
5.	822-240C	BRG, DUO-FACE W/SEAL LM67000LA		
6.	822-020C	BRG CUP LM-67010		
7.	407-327D	4BOLT HUB TAPPERED ROL BRG		
8.	407-227S	4BOLT HUB ASY TAPPERED ROL BRG	Includes items 5-7	
9.	802-106C	RHSNB 1/2-13X1 1/2 GR5		
10.	802-585C	RHSNB 1/2-13X3 1/2 GR5 PLT		
11.	407-231H	DRIVE WHEEL ARM		
12.	803-006C	NUT HEX 1/4-20 PLT		
13.	804-007C	WASHER FLAT 1/4 SAE PLT		
14.	802-004C	HHCS 1/4-20X3/4 GR5		
15.	806-055C	U-BOLT 3/4-10 X 7 1/32 X 7		
16.	407-332D	COVER PLATE		
17.	805-104C	PIN COTTER 3/16 X 1 1/2 PLT		
18.	803-053C	NUT HEX SLOTTED 3/4-16		
19.	407-229H	FERT DRIVE SPKT WLMT		
20.	803-020C	NUT HEX 1/2-13 PLT		
21.	804-015C	WASHER LOCK SPRING 1/2 PLT		
22.	407-331D	DRIVE WHEEL ARM SHIELD		
23.	817-406C	IDLER 1 PC 2.38X1.01X1.062		
24.	407-333D	SPACER		
25.	804-113C	WASHER FLAT 1/2 USS HARD PLT		
26.	803-169C	NUT HEX FLG LOCK 1/2-13 PLT		
27.	136-116D	CHAIN RL #40 140 PITCHES		
28.	805-127C	PIN CLEVIS 1/2 X 1 3/4		
29.	804-064C	WASHER INT-EXT 7/16 PLT		
30.	407-992S	GND DRIVE SPRING ASY	Includes items 31-38	
31.	816-306C	PLUG, SPRING ROD CASTING		
32.	802-550C	HHCS 1/2-13X10 SPTHD GR8		
33.	812-442C	DRV WHL SPRING TRUNION CASTING		
34.	807-159C	SPRING COMP 2 1/2ODX3/8X12 7/8		
35.	153-053D	SPRING STOP STAMPING SMALL		
36.	803-193C	NUT HEX FLANGE 1/2-13 GR G PLT		
37.	803-036C	NUT HEX JAM 1/2-13 PLT		
38.	121-166D	ADJ. YOKE END		
39.	800-001C	GREASE ZERK STRAIGHT 1/4-28		
40.	152-485D	SPKT 40B25 7/8 HEX W/SS		
41.	808-168C	SPKT 40B29 X 7/8 HEX BORE & SS		
42.	407-343D	7/8 HEX SHAFT		
43.	805-180C	PIN ROLL 1/4 X 1 1/2 LG PLT		
44.	402-025S	LOCK COLLAR, 7/8 HEX W/ SET SC		
45.	800-038C	SNAP RING INT 2.05 OD		
46.	188-006V	BRG .880 HEX BORE 205DD		
47.	120-188D	3 BOLT PIVOT CAST W/BRG SEAT		
48.	120-269S	3 BOLT PIVOT BRG ASSY	Include items 45-47	
49.	804-016C	WASHER FLAT 1/2 SAE PLT		
50.	802-082C	HHCS 1/2-13X1 3/4 GR5		
51.	802-048C	HHCS 1/2-13X9 1/2 GR5		
52.	848-049C	GEARBOX CONTROL ARM DECAL		
53.	848-101C	DECAL ADC2350 ROTATION ARROW		
54.	403-414H	CALIBRATION CRANK		

Dry Fertilizer Ground Drive

(Applies to YP40 only)

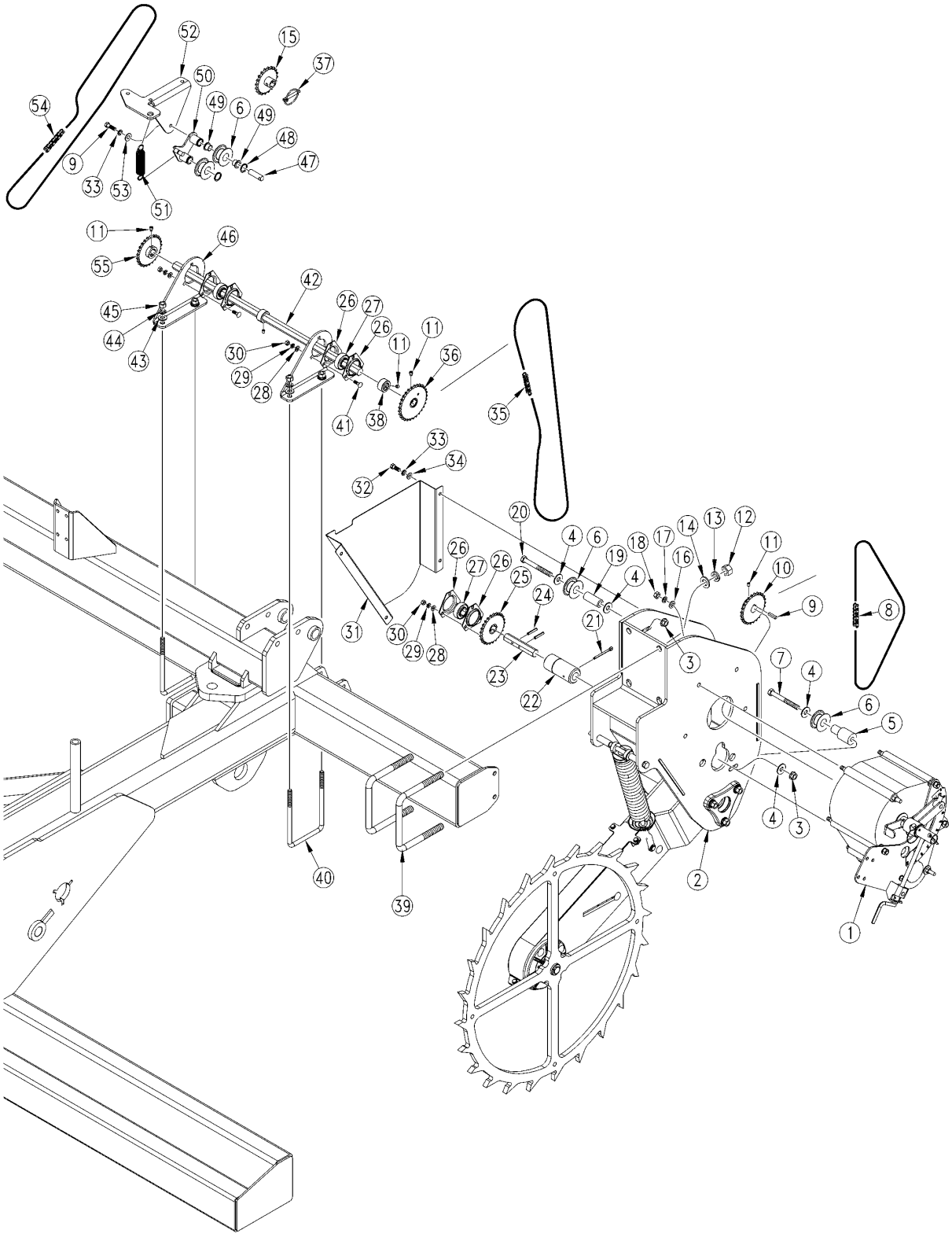

29767

Dry Fertilizer Ground Drive

(Applies to YP40 only)

Ref.	Part No.	Part Description	Comments	Revision
	dwg29767	Image No.		
1.	407-234S	ZERO-MAX GEARBOX ASSEMBLY		
2.	407-232H	GROUND DRIVE WELDMENT		
3.	803-169C	NUT HEX FLG LOCK 1/2-13 PLT		
4.	804-113C	WASHER FLAT 1/2 USS HARD PLT		
5.	407-344D	IDLER MOUNT TUBE		
6.	817-406C	IDLER 1 PC 2.38X1.01X1.062		
7.	802-413C	HHCS 1/2-13X4 1/2 GR5		
8.	136-062D	CHAIN RL #40 82 PITCHES		
9.	168-276D	KEY 1/4 X 1/4 X 1 1/4 LG		
10.	808-038C	SPKT 40B25 X 1 B W/KW & SS		
11.	801-035C	SCREW SET 5/16-18 SKT KP X 3/8		
12.	803-176C	NUT HEX 3/4-16 PLT		
13.	804-023C	WASHER LOCK SPRING 3/4 PLT		
14.	804-093C	WASHER FLAT 3/4 HARD ASTMF436		
15.	168-191H	30T QUICK CHANGE SPKT WELDMENT		
16.	804-041C	WASHER FLAT 7/16 SAE PLT		
17.	804-014C	WASHER LOCK 7/16 PLT		
18.	803-015C	NUT HEX 7/16-14 PLT		
19.	120-306D	TUBE RND 1 OD X 7/32W X 2.13		
20.	802-041C	HHCS 1/2-13X3 1/2 GR5		
21.	805-105C	PIN COTTER 1/4 X 2 1/2 PLT		
22.	407-235H	1 RND X 7/8 HEX ADAPTER		
23.	407-342D	7/8 HEX SHAFT		
24.	805-180C	PIN ROLL 1/4 X 1 1/2 LG PLT		
25.	152-485D	SPKT 40B25 7/8 HEX W/SS		
26.	822-175C	FLANGETTE 52 3-BOLT PLT		
27.	822-119C	BRG 7/8HEXX2.05OD SPH		
28.	804-036C	WASHER FLAT 5/16 SAE PLT		
29.	804-009C	WASHER LOCK SPRING 5/16 PLT		
30.	803-008C	NUT HEX 5/16-18 PLT		
31.	407-345D	CHAIN COVER		
32.	802-017C	HHCS 3/8-16X1 GR5		
33.	804-013C	WASHER LOCK SPRING 3/8 PLT		
34.	804-012C	WASHER FLAT 3/8 SAE PLT		
35.	136-033D	CHAIN RL #40 125 PITCHES		
36.	808-168C	SPKT 40B29 X 7/8 HEX BORE & SS		
37.	805-158C	PIN LINCH 5/16 X 2 11/32		
38.	402-058D	COLLAR LOCK 7/8 HEX		
39.	806-055C	U-BOLT 3/4-10 X 7 1/32 X 7		
40.	806-140C	U-BOLT 1/2-13 5 1/32 X 8 1/4		
41.	802-282C	RHSNB 5/16-18X1 GR5		
42.	407-348D	7/8 HEX SHAFT X 32 IN		
43.	804-016C	WASHER FLAT 1/2 SAE PLT		
44.	804-015C	WASHER LOCK SPRING 1/2 PLT		
45.	803-020C	NUT HEX 1/2-13 PLT		
46.	407-347D	BEARING MOUNT PLATE		
47.	891-191C	IDLER PIVOT 2.06 LONG		
48.	800-085C	SNAP RING EXT 1 HEAVY		
49.	817-083C	PRESS WHEEL ARM PIVOT BUSHING		
50.	403-115H	IDLER BRACKET WELDMENT		
51.	807-236C	SPRING EXT. 1.0ODX5.OLX.095MW		
52.	407-346D	IDLER MOUNT		
53.	804-011C	WASHER FLAT 3/8 USS PLT		
54.	136-109D	CHAIN RL #40 72 PITCHES		
55.	152-485D	SPKT 40B25 7/8 HEX W/SS		

Dry Fertilizer Walkboard and Ladder

(Applies to YP40 only)

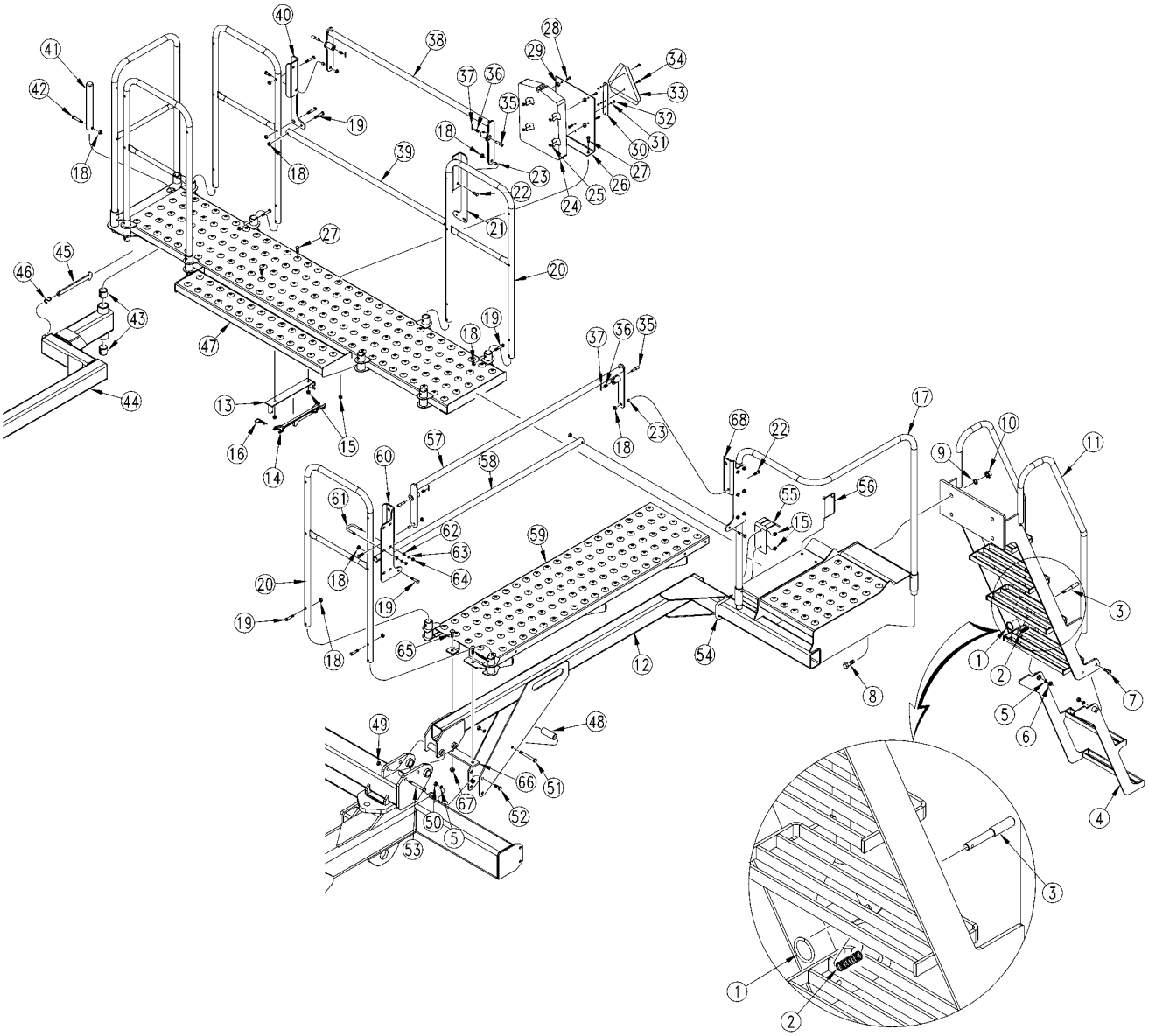

31009

Dry Fertilizer Walkboard and Ladder

(Applies to YP40 only)

Ref.	Part No.	Part Description	Comments	Revision
	dwg31009	Image No.		
1.	800-051C	RING, SPLIT 1-1/4 I.D.		
2.	807-087C	SPRING COMP 1/2 OD X .052 W		
3.	166-690D	PLUNGER LOCK PIN		
4.	401-438H	FLIP DOWN LADDER		
5.	804-015C	WASHER LOCK SPRING 1/2 PLT		
6.	803-020C	NUT HEX 1/2-13 PLT		
7.	802-128C	HHCS 1/2-13X2 GR5		
8.	802-392C	HHCS 3/4-10X1 3/4 GR5		
9.	804-023C	WASHER LOCK SPRING 3/4 PLT		
10.	803-027C	NUT HEX 3/4-10 PLT		
11.	401-427H	YP24 REAR LADDER WELDMENT		
12.	401-557H	WALKBOARD END SUPT WLDMNT		
13.	403-175H	WRENCH HOLDER		
14.	403-265D	SPRING AND WHEEL WRENCH		
15.	803-209C	NUT FLANGE LOCK 3/8-16 PLT		
16.	805-088C	PIN, HAIR COTTER 3/16 WIRE DIA		
17.	411-518D	HANDRAIL CORNER PLATFORM		
18.	803-013C	NUT LOCK 3/8-16 PLT		
19.	802-143C	HHCS 3/8-16X2 GR5		
20.	401-255H	HOOP HANDRAIL WELDMENT		
21.	401-743D	RAIL PIVOT MOUNT LH		
22.	802-079C	HHCS 3/8-16X1 1/4 GR5		
23.	119-278D	WALKBOARD LADDER PIVOT BUSHING		
24.	817-516C	MANUAL PAK 1" W/ GASKET		
25.	803-293C	NUT HEX FLG TL 1/4-20 ZNYCR		
26.	401-697D	YP SMV MANUAL PAK HANGER		
27.	802-388C	HFS 3/8-16X1 GR5		
28.	802-005C	HHCS 1/4-20X1 GR5		
29.	817-042C	MINI END WHEEL PRESS WHEEL		
30.	890-153C	SMV MOUNTING BLADE		
31.	804-009C	WASHER LOCK SPRING 5/16 PLT		
32.	803-008C	NUT HEX 5/16-18 PLT		
33.	818-055C	DECAL SLOW MOVING-GALV. BACKED		
34.	801-018C	SCREW RD HD 1/4-20 X 5/8		
35.	172-201D	6 BOLT LOCKOUT PLUNGER		
36.	807-096C	SPRING COMP 1/2 OD X 1 LG		
37.	805-062C	PIN ROLL 3/16 X 2 1/2 LG. PTL.		
38.	401-256H	UPPER RAIL WLDMNT		
39.	401-742D	TOP RAIL MIDDLE SECTION		
40.	401-744D	RAIL PIVOT MOUNT RH		
41.	113-797D	MARKER PIVOT PIN		
42.	802-216C	HHCS 3/8-16X2 3/4 GR5		
43.	890-264C	BUSHING 1 3/4 X 1 1/2 X 1 1/2		
44.	401-556H	WALKBOARD HINGE SUPT WLDMNT		
45.	411-462D	LATCH WALKBOARD HOLD OPEN		
46.	800-041C	S-HOOK #772 .177 X 1 1/8 PLT		
47.	401-253H	YP WALKBOARD WLDMMT		
48.	120-293D	TUBE RND DOM. 1 OD X 7/32WX3.0		
49.	803-024C	NUT LOCK 5/8-11 PLT		
50.	803-023C	NUT HEX JAM 5/8-11 PLT		
51.	802-413C	HHCS 1/2-13X4 1/2 GR5		
52.	802-091C	HHCS 1/2-13X1 1/2 GR5		
53.	802-335C	HHCS 5/8-11X6 1/2 GR5		
54.	806-138C	U-BOLT 3/8-16 X 4 1/32 X 3 3/4		
55.	411-587D	GUIDE PLATE RAIL TUBE		
56.	805-178C	PIN WIRE SNAP LOCK 3/8 X 3 1/2		
57.	401-601H	HANDRAIL WELDMENT		

Dry Fertilizer Walkboard and Ladder (continued)

(Applies to YP40 only)

Ref	Part No.	Part Description	Comments	Revision
58.	411-573D	HANDRAIL TUBE		
59.	401-600H	YP DF WALKBOARD WELDMENT		
60.	411-571D	RAIL PIVOT MOUNT LH		
61.	806-132C	U-BOLT 3/8-16 X 3 1/32 X 2 3/4		
62.	804-011C	WASHER FLAT 3/8 USS PLT		
63.	804-013C	WASHER LOCK SPRING 3/8 PLT		
64.	803-014C	NUT HEX 3/8-16 PLT		
65.	802-663C	HFS 1/2-13 X 1 1/2 GR8 NYL PLT		
66.	411-572D	WALKBOARD MOUNT CAP		
67.	803-169C	NUT HEX FLG LOCK 1/2-13 PLT		
68.	411-574D	RAIL PIVOT MOUNT RH		

Dry Fertilizer Walkboard and Ladder (continued)

(Applies to YP40 only)

This Page Intentionally Left Blank

Dry Fertilizer Meter Assembly

(Applies to YP40 only)

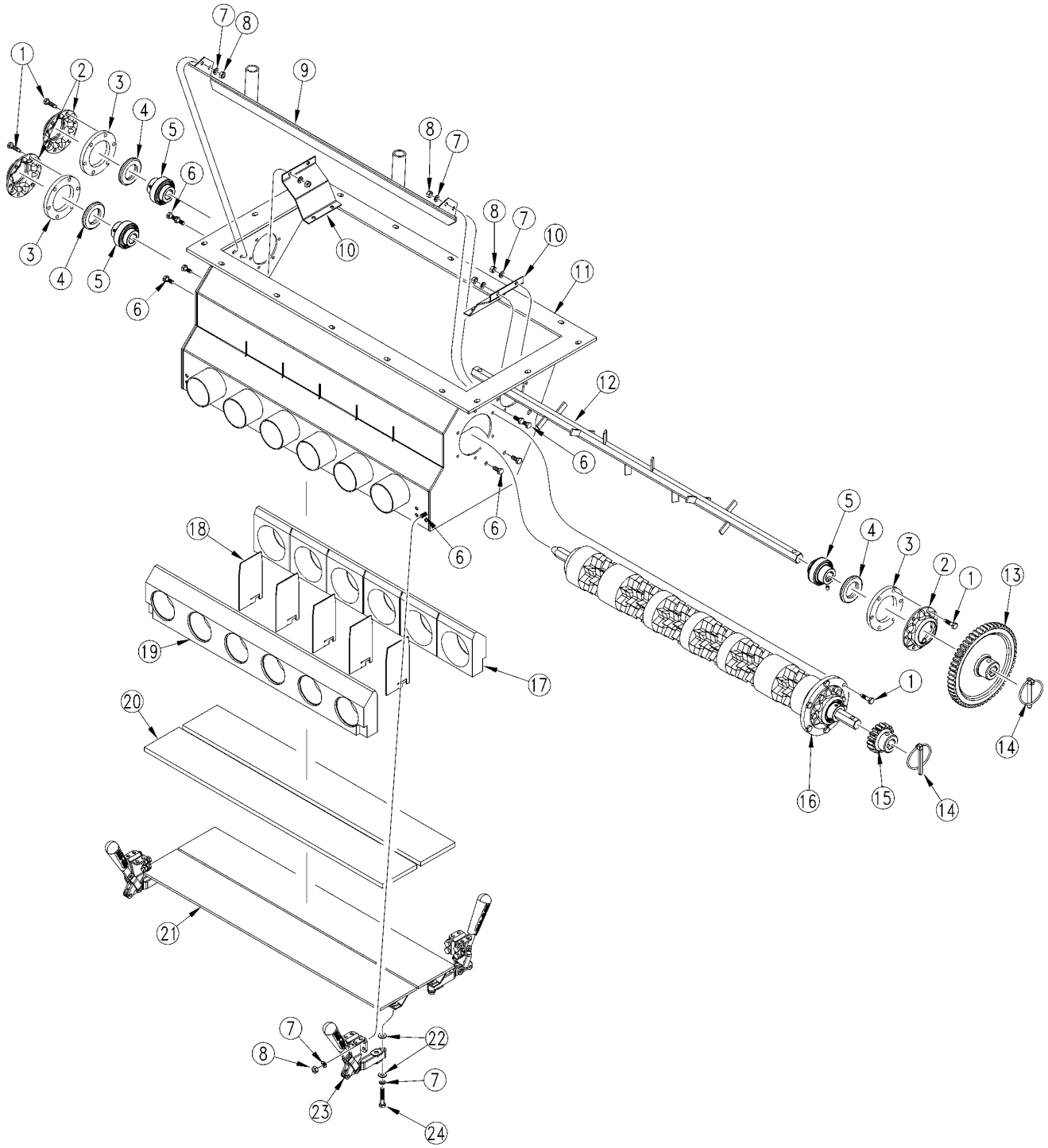

31016

Dry Fertilizer Meter Assembly

(Applies to YP40 only)

Ref.	Part No.	Part Description	Comments	Revision
	dwg31016	Image No.		
1.	801-151C	SCR HEX SELF TAP 1/4-20X1TYPEF		
2.	890-466C	HSG RIBB FLG 6BOLT PLT		
3.	168-251D	METERING BOX SEAL FLANGE		
4.	816-199C	SEAL 1.33IDX2.23ODX.31T		
5.	188-009V	BRG .755 HEX BORE W/S-S		
6.	802-078C	HHCS 1/4-20X5/8 GR5		
7.	804-006C	WASHER LOCK SPRING 1/4 PLT		
8.	803-006C	NUT HEX 1/4-20 PLT		
9.	168-075H	METERING BOX TOP PANEL WELDMNT		
10.	168-421D	METER BOX FILLER PLATE		
11.	168-215H	METERING BOX WELD SIDE ACCESS		
12.	168-076H	METER SHAFT WELDMENT		
13.	168-243D	GEAR 54 TOOTH QUICK CHANGE		
14.	805-158C	PIN LINCH 5/16 X 2 11/32		
15.	808-192C	GEAR 17 TOOTH QUICK CHANGE		
16.	403-291S	6 OF 6 YP40 METER SHAFT	Refer to "6 Outlet Meter Shaft Assembly" for breakdown	
17.	817-722C	METER BOX OUTLET TRANSITION		
18.	168-263D	METER BOX PARTITION LASER		
19.	817-723C	METER BOX INLET TRANSITION		
20.	816-553C	METERING BOX ACCESS SEAL		
21.	168-124H	CALIBRATION LID WELDMENT		
22.	804-007C	WASHER FLAT 1/4 SAE PLT		
23.	800-179C	DESTACO HOLD DOWN ACTION CLAMP		
24.	802-167C	HHCS 1/4-20X1 1/2 GR5		

6 Outlet Meter Shaft Assembly

(Applies to YP40 only)

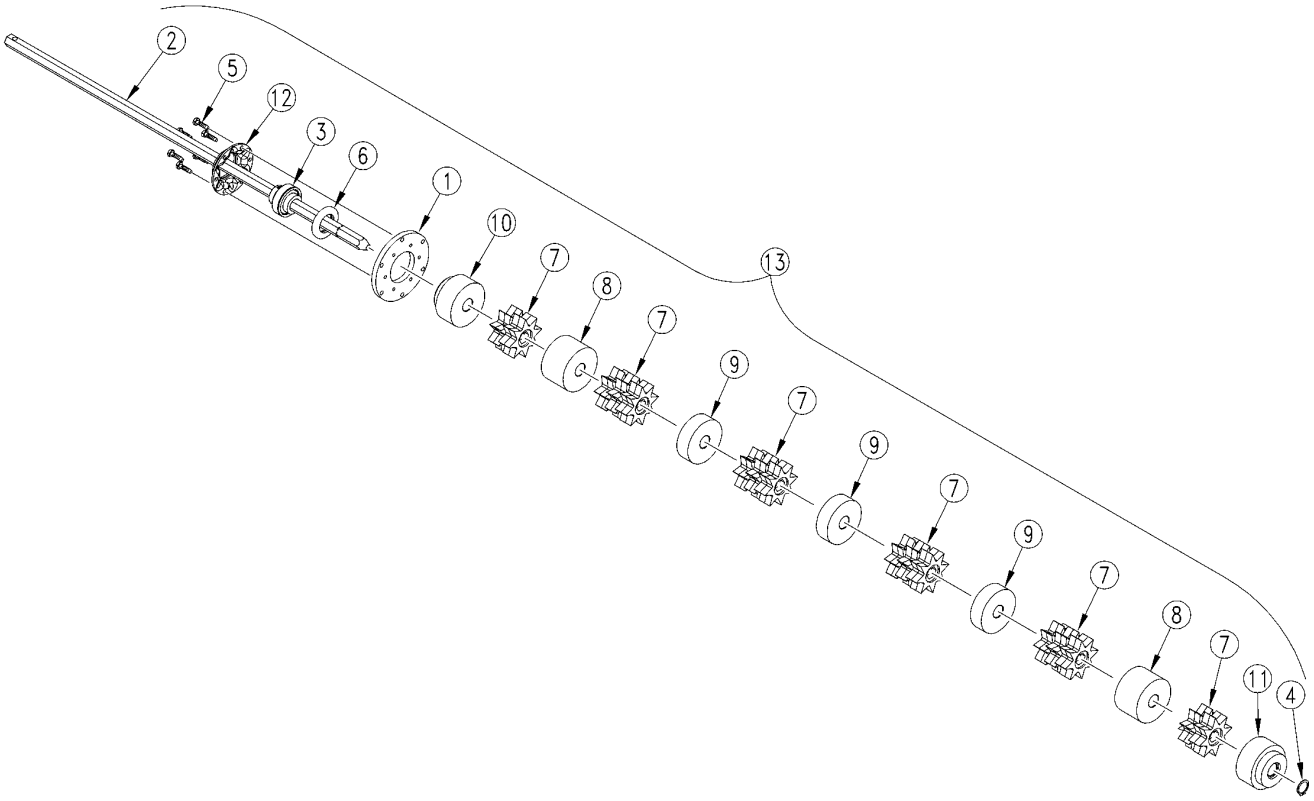

31111

6 Outlet Meter Shaft Assembly

(Applies to YP40 only)

Ref.	Part No.	Part Description	Comments	Revision
	dwg31111	Image No.		
1.	168-409D	METER SHAFT MOUNT PLATE		
2.	168-423D	METER SHAFT		
3.	188-009V	BRG .755 HEX BORE W/S-S		
4.	800-318C	SNAP RING EXT.812X.042 5100-81		
5.	801-151C	SCR HEX SELF TAP 1/4-20X1TYPEF		
6.	816-199C	SEAL 1.33IDX2.23ODX.31T		
7.	817-018C	AGITATOR 8 POINT HALF		
8.	817-206C	METERING BOX MIDDLE SPACER		
9.	817-426C	METERING BOX SPACER-1 IN		
10.	817-432C	METERING BOX END SPACER 2.007		
11.	817-433C	METERING BOX END SPACER 1.929		
12.	890-466C	HSG RIBB FLG 6BOLT PLT		
13.	403-291S	6 OF 6 YP40 METER SHAFT		

Dry Fertilizer Coulter

(Applies to YP40 only)

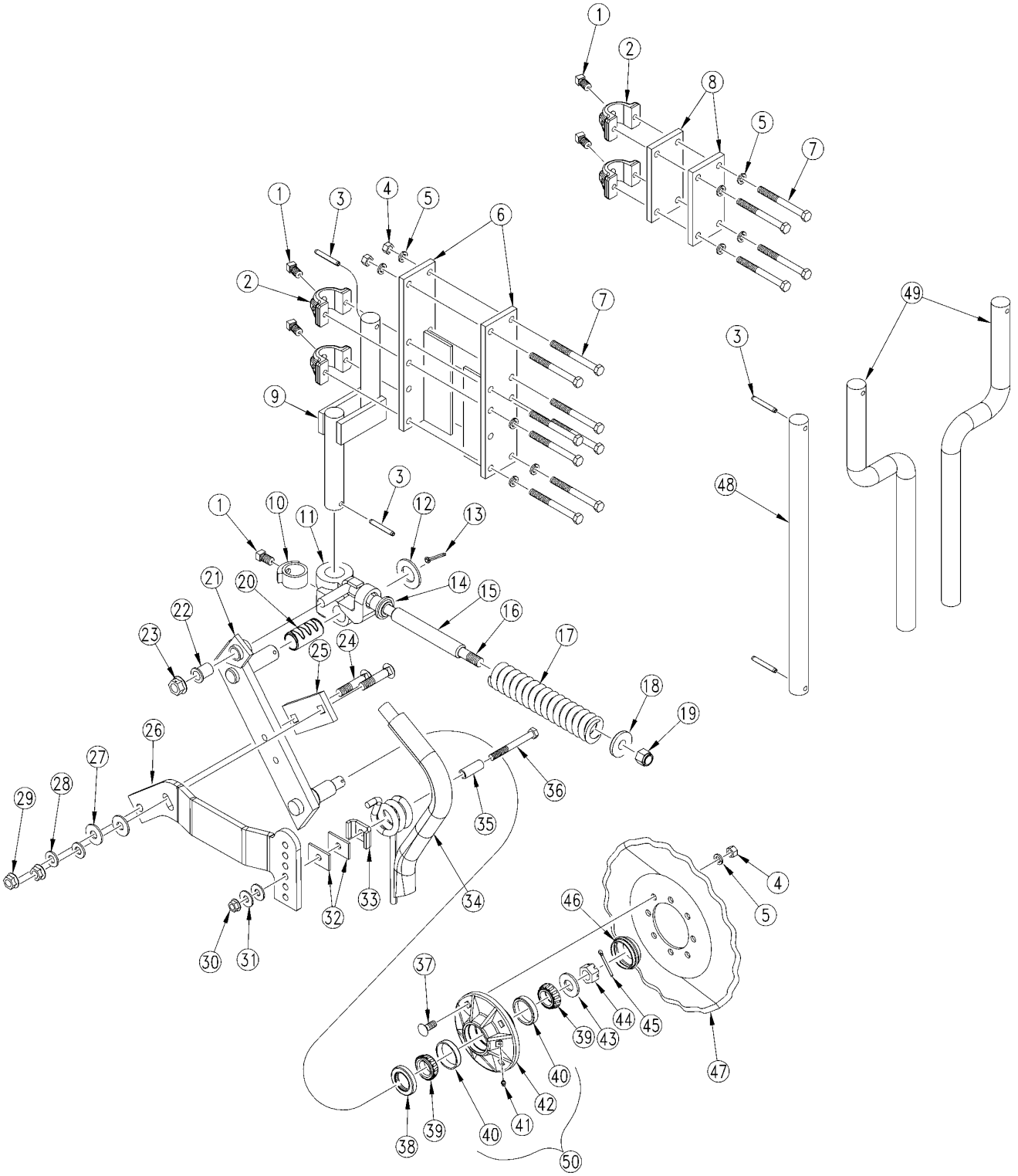

31015

Dry Fertilizer Coulter

(Applies to YP40 only)

Ref.	Part No.	Part Description	Comments	Revision
	dwg31015	Image No.		
1.	801-040C	SCREW SQ HD 5/8-11 X 1 CUP PT		
2.	204-072D	CLAMP SHANK 1 1/2 DIA		
3.	805-043C	PIN SPIROL 3/8X2 1/2 PLAIN		
4.	803-020C	NUT HEX 1/2-13 PLT		
5.	804-015C	WASHER LOCK SPRING 1/2 PLT		
6.	204-135H	SHANK MOUNT PLATE WA		
7.	802-045C	HHCS 1/2-13X5 GR5		
8.	204-452D	CLAMP PLT 5 BAR		
9.	820-323C	16IN ROUND SHANK 4 INCH OFFSET		
10.	149-162H	RPBY 149-044D		
11.	149-563D	MACH MOUNTING CASTING - COULTR		
12.	804-039C	WASHER FLAT 1 1/4 SAE PLT		
13.	805-021C	PIN COTTER 1/4 X 2 PLT		
14.	817-029C	BUSHING COULTER CASTING		
15.	204-107D	SPRING ROD SLEEVE 1 1/8 OD		
16.	204-075H	COULTER SPRING ROD WLDMT		
17.	149-559D	SPRING 2.25 O.D. X .5 COIL		
18.	149-558D	COULTER SPRING WASHER		
19.	803-025C	NUT HEX 3/4-10 PLT NYLOCK		
20.	890-389C	BUSHING 1.50ODX1.25IDX2.94		
21.	149-181E	FERT COULTER SWING ARM		
22.	817-051C	SWING ARM BUSHING		
23.	803-181C	NUT HEX FLANGE LOCK 3/4-10 PLT		
24.	802-338C	RHSNB 5/8-11X3 GR5		
25.	204-172D	BACKING PLATE		
26.	204-179D	EXTENSION ARM (CPH)		
27.	804-019C	WASHER FLAT 5/8 USS PLT		
28.	804-095C	WASHER FLAT 5/8 HARD ASTMF436		
29.	803-196C	NUT HEX FLANGE 5/8-11 PLT		
30.	803-193C	NUT HEX FLANGE 1/2-13 GR G PLT		
31.	804-017C	WASHER FLAT 1/2 USS PLT		
32.	204-029D	SPACER		
33.	204-242D	FERTILIZER TINE CLIP		
34.	407-238H	FERTILIZER TINE WELDMENT		
35.	204-241D	FERTILIZER TINE SPACER		
36.	802-413C	HHCS 1/2-13X4 1/2 GR5		
37.	802-214C	RHSNB 1/2-13X1 1/4 GR5		
38.	816-009C	OIL SEAL DOUBLE LIP		
39.	822-021C	BRG CONE 1.25ID LM-67048		
40.	822-020C	BRG CUP LM-67010		
41.	800-001C	GREASE ZERK STRAIGHT 1/4-28		
42.	200-002D	RPBY 200-039V		
43.	804-055C	WASHER SPINDLE - 7/8		
44.	803-029C	NUT HEX SLOTTED 7/8-14 PLT		
45.	805-017C	PIN COTTER 3/16 X 1 3/4 PLT		
46.	200-001D	HUB GREASE CAP		
47.	820-327C	COULTER BLADE (TURBO) 15" OD		
48.	204-013D	SHANK 1 1/2D X 26 FERT COULT		
49.	820-133C	1 1/2 X 26 OFFSET SHANK		
50.	200-039V	COULTER HUB & CUP ASSY	Includes items 40-42	

Part Number Index

The Part Number Index is a numeric index of all part numbers included in this manual. The index shows what page(s) the part is used on.

Part Number	Page
002-102ST	43, 104
084099	57
1001020	57
1042	183
107-111D	79, 89, 97
107-138S	79
1071001	57
1079	179
1084	179
1087-250	183
1087-437	183
1088-011	183
1088-210	179
1088-905	183
1088-906	183
1088-908	183
1089-011	183
1089-210	179
1092-6-6	183
1099	183
110011429	217
110011430	217
110011431	217
110011432	217
110040179	53, 218
110040305	53
113-005H	221
113-010H	221
113-013H	221
113-016H	221
113-017H	221
113-018H	223
113-025S	221
113-369H	223
113-480H	221
113-481H	221
113-683D	221
113-794D	221
113-797D	33, 221, 273
113-798D	221
113-799D	221
113-811D	221
113-816H	221
113-852H	221
1132-05	183
1132-08	183
115606-91	243
115607-91	243
115627-01	243
115628-01	243
115631-01	243
115698-91	243
115788	243
116-353D	223
116-354D	223
117-323D	9
117-379D	9
1179	183
1180	183
1182	183
119-154D	261
119-278D	33, 167, 273
120-188D	269
120-269S	269
120-293D	33, 273
120-306D	53, 57, 167, 271
120-313D	55
120825	81, 93, 99
121-166D	269
121-763S	227
1211	183
1217	183
1218	183
122-120D	83
122-164D	83
122-165D	83
122-166D	83
122-167D	83
122-201S	83
122-231A	101, 113
122-250H	83
123-004D	227, 231, 237
1285	179
129001	81
129BXT822	93, 99
129BXT827	81
136-016D	232
136-033D	271
136-062D	271
136-109D	271
136-116D	269
136-155D	227
136-159D	77
136-160D	77
136-203D	55
136-206D	95
136-214D	85, 95
136-215D	85
136-216D	85
136-236D	53, 57
136-241D	55
136-244D	53
136-247D	53, 167
136-249D	227
136-261D	231
148-387H	13
148-410D	225
149-059D	107
149-162H	281
149-181E	281
149-558D	107, 281
149-559D	107, 281
149-563D	281
149-576D	107
152-485D	269, 271
153-053D	269
160-404D	18
161-231D	47, 51
166-690D	33, 273
167-016H	261
167-020H	262
167-035H	261
167-048H	262
167-123H	261
167-282D	262
167-283D	262
167-285D	261
168-075H	277
168-076H	277
168-094D	267
168-124H	277
168-191H	271
168-215H	277
168-243D	277
168-251D	277
168-263D	277
168-276D	271
168-409D	279
168-421D	277
168-423D	279
1701027	57
1701029	57
17089	37, 267
172-201D	33, 273
173-173D	57
175-180S	261
181-064D	48, 51
188-001V	79, 90, 97
188-006V	269
188-007V	121, 123
188-008V	83
188-009V	277, 279
194-070D	13
194-274D	48
195-189D	55
196-166H	9
196-272K	48, 51
196-273K	51
196-289H	47
196-293H	47
196-392H	17
196-409H	18, 48
196-539K	48, 51
196-540K	51
196-653D	17
196-654D	47
196-876D	53, 55, 57
196-877D	53, 57
197-001D	17
198-057S	79
198-137D	141, 143, 145, 147
198-183D	79
198-201D	79
198-202D	79, 89, 103
198-239D	77
198-240D	77
198-241D	79
198-246D	77
198-247D	77
198-257D	77, 85, 95
198-265D	79
198-266D	79
198-288D	89
198-289D	89
198-290D	89
198-292D	85, 95
198-293D	85, 95
198-295D	85, 95
198-305D	79
198-331D	90
198-332D	85
198-333D	85
198-334D	86
198-335D	85
198-360D	89
198-491H	79
198-613H	77
198-614H	77
198-615H	79
198-618H	77
198-619H	77
198-738S	79
198-956K	79
198-998S	79
199-011D	125, 127, 129, 131
199-015D	127, 149, 151, 153, 155, 157, 159
199-024H	129
199-025H	125, 131
199-027H	127
199-043H	141
199-050D	125, 129, 131
199-057H	149, 153, 157
199-058H	149, 157
199-059H	133, 157
199-060H	153
199-087H	157
199-088D	18, 133, 135, 149, 151, 153, 155, 157, 159
199-088H	147
199-089H	147
199-106D	133, 149, 153, 157
199-107D	133, 135, 149, 151, 153, 155, 157, 159
199-108H	89, 133, 153, 157
199-109H	90, 133, 149, 157
199-113D	133, 135, 137, 139, 149, 151, 153, 155, 157, 159, 161
199-114D	135, 137, 139, 151, 155, 159, 161
199-128D	137
199-135D	137
199-140H	135, 137, 139, 155, 159, 161
199-141H	89, 90, 135, 137, 139, 151, 159, 161
199-142H	155, 159
199-143H	151, 159
199-144H	135, 159
199-145H	135, 159
199-146A	157
199-147A	133, 149, 153, 157
199-148H	157
199-149H	133, 149, 153, 157
199-151S	137
199-152H	137
199-153H	137, 139, 161
1M7016	185
1M7021-ADI	193, 195
1M7022-ADI	197, 199, 201, 203, 205, 207
1M7028	187, 189
200-001D	107, 281
200-002D	107, 281
200-006D	48, 51
200-039V	107, 281
202-189D	143, 145
204-013D	281
204-029D	281
204-072D	281
204-075H	281
204-084S	111
204-107D	281
204-133H	139, 149, 151
204-134H	139, 153, 155
204-135H	281
204-142H	107
204-143H	107

Part Number Index (continued)

Part Number	Page
204-144H	107
204-172D	281
204-179D	281
204-241D	281
204-242D	281
204-295D	107
204-328D	111
204-329D	111
204-341D	107
204-344D	107
204-346D	107
204-352D	107
204-353D	107
204-452D	281
206-010D	101, 113
206-011D	101, 113
206-012D	113
206-014S	101, 113
207-004D	121, 123
207-005D	121, 123
207-009S	121, 123
207-014S	123
207-015S	123
207-033S	121
207-034S	121
207-067D	119
207-094H	119
207-095H	119
207-142V	119
207-143V	119
207-148H	119
21121	37, 267
2153	183
232-050	181
232-056	181
232-059	181
23320	37, 267
249-051H	107
253-028	181
270-078	181
273-004	181
288-310H	97
288-370H	85
288-374H	85, 103
298-001D	79
298-509H	85
298-510H	85, 95
298-513H	85, 95
298-651H	77
298-855H	95, 97
298-856H	95
298-881S	90
298-882S	90
298-883S	85
298-884H	95
298-887S	85
2A0006	185
2A0012	185, 187, 189, 193, 195
2A0014	185, 191
2A0018	191, 193
2A0019	187, 189, 195
2A0024	185, 193, 195
2A0025	187, 189, 197, 199, 201, 203, 205, 207
2A0130	191
2A0132	187, 189
2A0202	191
2A0215	187, 189
2A0218	187, 189
2M1190	191
2M4532	185
2S6593NC	193
2S7532	195
2S7584NC	203
2S7586NC	207
2S8522	187, 189
2S8524NC	197, 199
2S8620NC	201
2S8622NC	205
3089	183
31114H1041	73, 75
31121H1295	73, 75
31128864	73, 75
313-176D	261
313-186D	261
318-508D	47
342103	73, 75
342107	73, 75
342108	73, 75
342110	73, 75
342111	73
343001	73, 75
343002	73, 75
343005	73, 75
343006	73, 75
343011	73, 75
343021	73, 75
343029	73
343032	73, 75
343052	73, 75
343053	75
343060	73, 75
343062	73, 75
343066	73, 75
343067	73
343073	73, 75
343089	73, 75
343091	73
343092	73, 75
398-456H	95
3M1108	191
3R1510	185
3R5412	193
3R6912	195
3R7540	203, 207
3R8512	189, 199
3R9512	187, 197
3R9640	201, 205
401-141H	9
401-159H	9
401-167H	17
401-170H	9
401-171H	9
401-203H	37, 267
401-251S	31
401-253H	33, 273
401-255H	33, 273
401-256H	33, 273
401-258H	9
401-363H	37, 267
401-407H	17
401-408H	57
401-409H	57
401-427H	33, 273
401-431H	17, 39
401-432H	48
401-433H	17
401-434H	21
401-436H	9
401-438H	33, 273
401-439H	47
401-440H	9
401-442H	17
401-443H	17
401-444H	13
401-446H	13
401-447H	13
401-524D	9, 15
401-525D	9, 15
401-527D	9
401-537D	37, 267
401-542H	17
401-543H	18
401-544H	17
401-545H	17
401-546H	17
401-547H	17
401-548H	9, 11
401-549H	9
401-550H	9, 17
401-551H	47
401-552H	31, 265
401-553H	31
401-554H	29
401-555H	225
401-556H	33, 273
401-557H	33, 273
401-558H	17, 39
401-560H	17, 55
401-563D	57
401-590H	17, 39
401-598H	15
401-600H	274
401-601H	273
401-613H	267
401-632D	53
401-632H	13
401-633H	13
401-634H	13
401-686D	47
401-693L	18
401-694H	18
401-697D	33, 273
401-699D	55
401-719D	31
401-742D	33, 273
401-743D	33, 273
401-744D	33, 273
401-747D	57
401-785H	18
401-786H	18
401-798H	47
401-800D	31
401-866H	9
401-870H	31
401-955S	31
402-011D	17
402-025S	53, 55, 57, 59, 269
402-052D	57
402-055D	55
402-056D	57
402-058D	55, 271
402-149H	69
402-172H	47
402-211H	167
402-241H	51
402-264H	47
402-272H	59
402-274H	59
402-278H	59
402-280H	59
402-282D	69
402-302D	47
402-329K	60
402-367H	47
402-377D	53
402-378D	53
402-420D	31
402-429S	55
402-444D	51
402-460D	53
402-507D	53, 55, 57
402-509D	55
402-511D	48
402-513D	48
402-523D	59
402-524D	59
402-525D	59
402-527D	59
402-529D	59
402-530D	59
402-532D	59
402-533D	59
402-534D	59
402-535D	59
402-538D	59
402-539D	59
402-541D	59
402-591D	60
402-630D	59
403-053D	69
403-054D	70
403-056D	65, 69
403-057D	69
403-058D	65, 69
403-059D	77, 95
403-060D	69
403-061D	69
403-063D	69
403-064D	70
403-066D	69
403-068D	69
403-070D	69
403-071D	69
403-075D	69
403-076D	69
403-077D	69
403-078D	69
403-081D	69
403-082D	69
403-083D	69
403-084D	69
403-085D	69
403-086D	69
403-088D	69
403-089D	69
403-090D	69
403-091D	69
403-092D	69
403-093D	69
403-094D	69
403-095D	69
403-096D	69
403-097D	69
403-098D	69
403-104D	85, 95
403-104K	77
403-107D	85, 95
403-107V	69
403-108D	85
403-111D	85, 95

Part Number Index (continued)

Part Number	Page
403-112D	85, 95
403-112H	85, 95
403-113H	85, 95
403-115H	85, 95, 271
403-116H	85, 95
403-117D	65
403-117S	85, 95
403-118D	66
403-119D	66
403-120D	66
403-122D	65
403-123D	65
403-124D	65
403-125D	66
403-126D	66
403-127D	65
403-128D	65
403-129D	65
403-130D	65
403-131D	65
403-132D	65
403-133D	65
403-134D	65
403-135D	65
403-136D	65
403-137D	65
403-138D	65
403-139D	65
403-140D	65
403-141D	65
403-142D	69
403-142H	23
403-149D	63, 65
403-150D	63, 65
403-152D	65
403-153D	65
403-154D	65
403-157S	63
403-159H	23, 29, 261
403-165H	25
403-166H	25
403-175H	33, 273
403-177D	25
403-178D	25
403-179H	29
403-182D	85, 95
403-186H	25
403-188H	23, 29
403-189H	25
403-214D	23
403-214S	89, 97
403-228H	23
403-229H	27
403-232D	65
403-233D	63
403-234D	23, 29, 261
403-234H	17
403-236H	25
403-237H	25
403-239H	25
403-241H	23, 29
403-242S	29
403-243H	17
403-244H	267
403-245H	267
403-246H	31
403-247H	70
403-248D	25
403-259H	261
403-262H	261
403-263H	261
403-265D	33, 273
403-266H	261
403-268H	261
403-269H	261
403-277H	261
403-290K	261
403-291S	277, 279
403-303D	29
403-306D	31, 265
403-312D	86, 95
403-317D	25
403-318D	25
403-332D	23, 29
403-338D	37
403-345D	25
403-354D	31
403-361D	31, 265
403-381D	18
403-396D	25
403-402D	25
403-403D	23
403-407D	23, 29
403-408D	23, 261
403-409D	29
403-414H	269
403-425D	69
403-426D	69
403-427D	29
403-429H	11
403-473D	261
403-474D	261
403-553D	31
403-586K	103
403-595D	237, 257
403-596D	238, 258
403-653D	45
403-654D	45
403-667D	85, 103
403-715A	104
403-724D	104
403-725D	103
403-788D	23
403-789D	29
403-830D	31
403-934A	218
403-948D	23, 29
404-014S	89
404-020D	89, 104
404-061D	101, 113
404-077D	89
404-078D	89
404-079D	89
404-088H	101, 113
404-119D	89
404-121S	89, 97
404-144D	101, 113
404-147D	133, 135, 149, 153, 157, 159
404-152D	90
404-153D	89
404-155D	89
404-170H	97
404-174D	89
404-189D	90
404-192D	103
404-194D	117
404-195D	117
404-196D	117
404-198D	89
404-203D	103
404-204D	103
404-207D	103
404-208D	103
404-209D	43, 103
404-212D	101, 113
404-213D	101, 113
404-214D	89
404-219D	103
404-220D	103
404-224D	43
404-225D	43
404-226D	43
404-227D	43
404-228D	13
404-254D	90
404-255D	90
404-256D	104
404-348D	101
404-796H	89
404-861H	43
405-021H	157, 159, 161
405-022H	157, 159, 161
405-023S	157, 159, 161
405-024S	157, 159, 161
405-028H	163
405-031D	125, 129, 131, 133, 135, 137, 139, 147, 149, 151, 153, 155, 157, 159, 161
405-032D	89
405-052D	163
405-053D	163
405-054D	163
405-055D	157, 159, 161
405-057D	157, 159
405-063D	161
407-116D	225
407-134D	237, 257
407-140D	237, 257
407-143H	227
407-168D	227
407-169D	227
407-170D	227
407-171D	238
407-172D	227
407-193H	227
407-222H	227
407-223H	265
407-225H	227
407-226H	227, 269
407-227S	227, 269
407-228H	227
407-229H	227, 269
407-231H	269
407-232H	271
407-234S	271
407-235H	271
407-238H	281
407-246H	265
407-247H	265
407-248H	265
407-249H	265
407-279D	21, 241
407-327D	228, 269
407-329D	227
407-331D	269
407-332D	269
407-333D	269
407-342D	271
407-343D	269
407-344D	271
407-345D	271
407-346D	271
407-347D	271
407-348D	271
407-354D	265
407-356D	265
407-357D	265
407-365D	265
407-374D	265
407-380D	237, 257
407-381D	265
407-382D	265
407-461H	231
407-462H	232
407-463H	231
407-465H	231
407-466H	232
407-468H	231
407-469H	231
407-470H	231
407-474H	231
407-521S	227
407-578D	232
407-579D	232
407-580D	231
407-581D	231
407-587D	231
407-592D	231
407-598D	231
407-600D	231
407-635D	228
407-650D	231
407-736H	227
407-741H	235
407-826D	227
407-992S	231, 269
411-001D	53
411-030D	37, 267
411-175H	209
411-180S	211
411-200D	17
411-201D	18
411-214D	13
411-215D	13
411-251D	86
411-273C	225
411-299D	11
411-300D	47
411-332D	13
411-337D	39
411-338D	48
411-352D	11
411-374D	11
411-386D	217
411-391D	86
411-462D	33, 273
411-481D	86
411-514D	34
411-518D	33, 273
411-566D	86
411-567D	86
411-571D	274
411-572D	274
411-573D	274
411-574D	274
411-583D	86
411-587D	33, 273
411-602D	39
411-603D	171
411-615D	13
411-682D	34

Part Number Index (continued)

Part Number	Page
411-780D	41
411-781D	41
411-960H	13
413-757D	13
417-833V	253, 255, 257
417-837H	255
421-134D	31
421-982D	9
431-078H	258
464360176S1	53, 217
464820511S1	217
464820517S1	217
464820518S1	217
464820520S1	39, 41, 217
466970014S1	37, 217, 267
466980040S1	258
467830760	218
467833000S1	218
467980124	217
467980126	217
467980410	217
467980471	217
467980473	217
467980610	217
467980621	217, 218
467981100S1	217
467981201A	217
467981701	217
467981707	217
467981710	217
467981720	217
467981721	217
467981722	217
467981723	217
467981724	217
467982000S1	59
467982001S1	217
467983505	59
467984220S1	217
467985060S1	217
467987520S1	217
467988320S1	217
468100200S1	104
468100210	103
498-228H	86
498-229H	86
4M1102	191
4M4108	185
4R5109	193
4R6109	195
4R7113	203, 207
4R8108	189
4R8109	199
4R9108	187
4R9110	197, 201, 205
502-060D	225
502-067D	169, 171, 175
502-068D	17, 169, 171, 175
503-158D	29
506-365D	225
507-034V	237, 257
507-039D	237, 257
507-040D	237, 257
566-042H	18
586-233D	45
5M1103	191
5M4132	185
5R5132	193
5R6132	195
5R7193	207
5R7195	203
5R8122	199
5R8124	189
5R9122	197, 205
5R9124	187, 201
6560007	57
6M1108	191
6R1144	185
6R5164-ADI	193
6R6164-ADI	195
6R7190-ADI	203, 207
6R8170-ADI	199
6R8171	189
6R9170-ADI	197, 201, 205
6R9171	187
7M1302	191
7M4332	185
7M6332	193
7M7332	195
7M7425	207
7M7427	203
7M8322	197, 199, 205
7M8324	187, 189, 201
800-001C	9, 17, 47, 79, 89, 107, 228, 231, 269, 281
800-004C	59
800-038C	269
800-041C	33, 273
800-044C	173
800-046C	69
800-051C	33, 273
800-052C	43
800-054C	137, 157, 159, 161
800-058C	232
800-064C	17
800-085C	69, 85, 95, 271
800-093C	83
800-112C	90
800-118C	79, 89, 103
800-121C	261
800-123C	225, 237, 241, 257
800-124C	25, 31, 97, 265
800-125C	53, 57, 225, 238, 257
800-126C	241
800-137C	63, 65
800-151C	37
800-164C	107
800-166C	101, 113
800-177C	107
800-179C	25, 277
800-180C	261, 265
800-213C	79, 90, 97
800-220C	63, 65
800-227C	65
800-230C	63
800-232C	111
800-244C	79, 90
800-257C	53, 57
800-303C	77
800-306C	211
800-318C	279
800-319C	70
800-365C	85, 95
800-367C	103, 237, 257
800-373C	37
800-382C	227, 231
800-418C	23, 29
801-002C	65
801-018C	33, 273
801-025C	267
801-035C	55, 271
801-040C	281
801-055C	37
801-071C	237, 257
801-078C	83, 85, 95, 101, 113
801-081C	37, 267
801-084C	83, 101, 113
801-106C	65
801-116C	9
801-151C	45, 277, 279
801-155C	217, 267
801-160C	70
801-164C	89
801-168C	104
801-172C	65
801-187C	25
801-195C	63
801-231C	231
801-233C	103
802-001C	23, 29
802-002C	231
802-004C	23, 29, 60, 63, 265, 269
802-005C	23, 25, 29, 33, 37, 59, 73, 75, 125, 129, 131, 141, 147, 165, 237, 258, 261, 273
802-007C	18, 70, 231
802-009C	119, 169, 171, 175
802-010C	23, 29, 261
802-013C	232
802-014C	43, 59
802-015C	85, 95, 157, 159
802-017C	23, 29, 37, 41, 43, 55, 59, 77, 85, 95, 103, 223, 261, 267, 271
802-022C	59, 83, 163, 169, 171, 227, 243, 255
802-023C	59, 187, 189, 193, 195, 197, 199, 201, 203, 205, 207
802-026C	23, 29
802-029C	125, 127, 129, 131, 157, 159, 161
802-030C	111, 133, 149, 153, 157
802-032C	227
802-034C	13, 23, 31, 47, 237
802-038C	262
802-039C	89, 231
802-041C	53, 55, 57, 167, 227, 271
802-045C	231, 281
802-047C	9, 31, 225
802-048C	269
802-051C	111, 163
802-053C	48
802-055C	21, 23, 225, 241
802-058C	125, 127, 141, 143, 145
802-059C	147
802-060C	47, 135, 157, 159
802-069C	47, 48, 51
802-070C	51
802-078C	25, 121, 123, 267, 277
802-079C	25, 29, 33, 37, 137, 161, 217, 267, 273
802-080C	23, 29, 261
802-082C	55, 107, 137, 139, 161, 261, 269
802-091C	9, 13, 17, 33, 45, 89, 273
802-092C	79, 89, 97, 101, 113, 139, 149, 151, 153, 155
802-094C	115
802-097C	59
802-099C	117
802-100C	221
802-106C	90, 269
802-110C	13
802-114C	11, 77, 85, 95
802-115C	11
802-116C	231
802-126C	107
802-128C	33, 227, 273
802-130C	221
802-138C	167
802-143C	33, 273
802-147C	13, 169, 171, 173
802-149C	121, 123
802-152C	17, 60, 70
802-159C	31, 65, 238, 258
802-160C	89, 129, 131, 133, 135, 137, 139, 149, 151, 153, 155, 161
802-162C	157, 159
802-166C	9, 15
802-167C	23, 25, 29, 37, 59, 277
802-172C	18, 89, 93, 99
802-182C	48, 51
802-183C	97
802-184C	33
802-190C	17
802-194C	231
802-196C	127
802-197C	31
802-203C	53, 167
802-214C	107, 111, 281
802-216C	33, 221, 273
802-221C	73, 75
802-223C	17
802-224C	23, 29, 37, 59, 104, 261, 267
802-226C	262
802-228C	79, 89, 97
802-250C	29, 231
802-252C	93, 99
802-257C	63, 65
802-258C	77, 89, 225
802-274C	265
802-282C	23, 29, 53, 271
802-283C	73, 75
802-289C	265
802-301C	247, 249
802-315C	69

Part Number Index (continued)

Part Number	Page
802-331C	119, 227
802-335C	33, 273
802-338C	281
802-370C	23, 29, 171
802-375C	267
802-382C	85, 95
802-388C	33, 273
802-392C	33, 273
802-411C	81, 261
802-413C	33, 109, 135, 137, 139, 151, 155, 159, 161, 221, 271, 273, 281
802-419C	77
802-421C	141, 143, 145, 147
802-425C	261
802-429C	13
802-430C	79
802-431C	115
802-469C	262
802-474C	213
802-481C	31
802-550C	269
802-574C	103
802-575C	59, 103
802-578C	31, 255
802-585C	269
802-616C	133, 149, 153, 157
802-617C	143
802-618C	145
802-629C	51
802-630C	48, 51
802-646C	89
802-663C	89, 274
802-694C	79
802-705C	11, 25
802-718C	107
802-728C	47
802-729C	79
802-736C	221
802-745C	85, 95
802-775C	53, 55, 57
802-782C	57
802-798C	48
802-800C	37, 267
802-852C	13
802-883C	115
802-893C	53, 57
802-901C	59
802-904C	59
803-001C	104, 217
803-006C	23, 25, 29, 53, 57, 59, 65, 103, 238, 258, 261, 265, 269, 277
803-007C	17
803-008C	31, 33, 65, 70, 119, 139, 149, 151, 153, 155, 213, 238, 255, 258, 261, 271, 273
803-011C	261
803-013C	11, 17, 33, 221, 273
803-014C	9, 13, 25, 37, 39, 41, 43, 55, 59, 81, 83, 85, 93, 95, 99, 103, 169, 171, 173, 217, 221, 223, 243, 261, 262, 267, 274
803-015C	23, 29, 261, 271
803-019C	221, 231
803-020C	9, 13, 17, 31, 33, 43, 45, 53, 55, 57, 89, 103, 107, 109, 117, 167, 221, 225, 227, 231, 238, 255, 261, 265, 269, 271, 273, 281
803-021C	21, 23, 48, 77, 85, 95, 107, 125, 129, 131, 133, 135, 149, 151, 153, 155, 157, 159, 163, 221, 231, 241
803-023C	33, 273
803-024C	29, 33, 47, 221, 273
803-025C	281
803-026C	47, 51
803-027C	15, 27, 33, 48, 86, 225, 228, 231, 273
803-029C	48, 51, 107, 281
803-031C	13, 47
803-034C	9, 15
803-036C	269
803-037C	255
803-043C	79, 89, 93, 97, 99, 101, 113
803-048C	107
803-049C	107
803-052C	111
803-053C	111, 223, 227, 231, 269
803-063C	18, 47
803-065C	104
803-068C	121, 123
803-073C	17, 47
803-078C	23, 29, 157, 159
803-079C	17
803-084C	17
803-086C	227, 232, 255
803-088C	23, 29, 63, 125, 127, 129, 131, 141, 143, 145, 147, 165, 237, 257
803-147C	225, 227, 262
803-159C	223
803-169C	77, 85, 95, 97, 107, 119, 135, 137, 139, 141, 143, 145, 147, 151, 155, 159, 161, 221, 258, 269, 271, 274
803-171C	137
803-176C	269, 271
803-177C	23, 29, 31, 53, 55, 115, 167, 237, 258, 265
803-181C	281
803-193C	269, 281
803-194C	63, 73, 75, 171
803-196C	107, 281
803-199C	169, 171, 175, 225, 258
803-209C	29, 33, 41, 59, 77, 85, 95, 133, 149, 153, 157, 261, 273
803-219C	48, 51
803-229C	69, 125, 127, 129, 131, 133, 149, 153, 157, 159, 161
803-230C	23, 29, 37, 121, 123, 267
803-234C	197, 199, 201, 203, 205, 207
803-255C	70
803-257C	197, 199, 201, 203, 205, 207
803-263C	31, 107, 231, 265
803-268C	37, 267
803-269C	104
803-278C	57
803-293C	33, 273
803-302C	69
803-307C	79
803-319C	55
803-345C	65
803-383C	232
804-006C	23, 25, 29, 37, 53, 57, 59, 65, 103, 238, 258, 261, 265, 267, 277
804-007C	23, 25, 29, 53, 57, 60, 63, 65, 70, 104, 261, 265, 267, 269, 277
804-009C	11, 18, 31, 33, 65, 70, 119, 139, 149, 151, 153, 155, 213, 231, 238, 255, 258, 261, 271, 273
804-010C	23, 29, 31, 167, 169, 171, 175, 231
804-011C	25, 55, 133, 149, 153, 157, 169, 171, 227, 232, 271, 274
804-012C	23, 29, 37, 43, 59, 79, 85, 95, 223, 261, 267, 271
804-013C	9, 13, 23, 25, 29, 37, 39, 43, 59, 81, 83, 85, 93, 95, 99, 103, 161, 163, 169, 171, 173, 217, 221, 223, 243, 262, 267, 271, 274
804-014C	23, 29, 41, 79, 125, 127, 129, 131, 133, 149, 153, 157, 261, 271
804-015C	9, 13, 17, 23, 31, 33, 43, 45, 47, 51, 53, 55, 57, 89, 103, 107, 109, 167, 221, 225, 227, 231, 238, 255, 261, 265, 269, 271, 273, 281
804-016C	23, 43, 109, 117, 225, 237, 261, 269, 271
804-017C	119, 221, 227, 265, 281
804-019C	86, 281
804-021C	9, 23, 157, 159, 161, 191
804-022C	21, 23, 48, 77, 79, 85, 89, 95, 107, 125, 127, 129, 131, 133, 135, 137, 139, 141, 143, 145, 147, 149, 151, 153, 155, 157, 159, 161, 163, 221, 225, 231, 241
804-023C	15, 27, 33, 48, 86, 225, 228, 231, 269, 271, 273
804-025C	111, 223, 228, 231, 262
804-027C	13, 47
804-028C	221
804-029C	9, 13, 47, 119, 221
804-030C	9, 15
804-032C	59
804-035C	9, 15
804-036C	18, 261, 271
804-037C	107
804-039C	9, 17, 48, 281
804-040C	79, 89, 97
804-041C	23, 29, 125, 127, 129, 131, 133, 149, 153, 157, 261, 271
804-042C	85, 95
804-046C	59, 103, 217
804-050C	104
804-054C	60, 103, 217
804-055C	107, 281
804-061C	53, 55, 57
804-064C	269
804-071C	9
804-075C	25, 29, 37, 247, 249
804-078C	83, 101, 113
804-093C	227, 231, 269, 271
804-094C	137, 139, 161
804-095C	281
804-100C	89, 103
804-102C	17, 48, 51
804-111C	65, 69
804-112C	101
804-113C	53, 55, 57, 167, 227, 231, 269, 271

Part Number Index (continued)

Part Number	Page
804-156C	107
804-165C	107
804-195C	79, 89
804-197C	47
804-206C	63
804-252C	104
804-274C	104
805-001C	47
805-004C	9, 221
805-010C	225, 227
805-016C	48, 51
805-017C	107, 281
805-019C	223
805-020C	83
805-021C	57, 281
805-024C	9, 73, 75
805-034C	23, 27
805-041C	9, 17
805-043C	281
805-045C	101, 111, 113
805-058C	209, 211, 221
805-060C	13, 17, 47
805-062C	33, 95, 273
805-063C	79, 89, 90, 97, 103
805-064C	227
805-067C	79, 125, 127, 129, 131, 133, 135, 149, 151, 153, 155, 157, 159
805-069C	9, 83
805-080C	65, 69
805-085C	17
805-088C	33, 273
805-089C	73, 75
805-104C	48, 51, 227, 231, 269
805-105C	9, 271
805-109C	9, 133, 135, 149, 151, 153, 155, 157, 159
805-116C	17
805-117C	85
805-119C	9
805-126C	9
805-127C	227, 231, 269
805-131C	221
805-141C	9
805-143C	227, 235
805-146C	53, 57, 65, 69
805-154C	97
805-158C	271, 277
805-159C	13
805-166C	127
805-168C	9
805-169C	262
805-178C	33, 273
805-180C	53, 57, 90, 227, 269, 271
805-183C	133, 135, 149, 151, 153, 155, 157, 159
805-186C	97
805-191C	101
805-192C	235
805-196C	17, 48
805-208C	65, 73, 75
805-212C	9
805-230C	17
805-234C	227
805-235C	227
805-240C	9, 95, 227, 231
805-249C	47
805-250C	89, 97
805-255C	11, 13, 17
805-278C	90, 97
805-290C	90
805-295C	129
805-296C	65, 70, 79
805-297C	70
805-298C	65, 70
805-304C	125, 131
805-307C	65
805-312C	17
805-331C	107
805-334C	9
805-335C	79, 89, 97
805-363C	137, 139, 161
805-385C	103
805-396C	209, 211
805-412C	17
805-417C	133, 149, 153, 157
805-420C	48
805-432C	135, 137, 139, 151, 155, 159, 161
805-435C	86
805-436C	137, 139, 161
806-002C	265
806-010C	265
806-019C	107
806-026C	265
806-044C	29
806-052C	107
806-053C	31, 77, 95
806-055C	27, 225, 269, 271
806-060C	43
806-073C	41, 59
806-076C	15
806-077C	261
806-081C	107
806-083C	265
806-102C	228, 231
806-106C	107
806-110C	107, 221
806-113C	221
806-122C	107
806-132C	39, 274
806-138C	33, 273
806-139C	255
806-140C	271
806-144C	103
806-152C	237, 257
806-166C	221
806-192C	31, 237, 258, 261, 265
806-193C	86
806-196C	258
806-203C	48
806-212C	85
806-221C	258
807-073C	13
807-076C	77, 85, 95
807-087C	33, 273
807-088C	125, 127, 131
807-096C	33, 273
807-101C	83
807-106C	97, 101, 113, 261
807-116C	77
807-119C	89, 104
807-125C	101, 113
807-137C	123
807-158C	121
807-159C	269
807-172C	79
807-174C	86, 95
807-182C	23, 29
807-184C	129
807-185C	70
807-186C	65, 69
807-187C	65, 69
807-188C	83
807-194C	65, 70
807-232C	85, 95
807-236C	85, 95, 271
807-268C	262
807-278C	133, 135, 137, 139, 149, 151, 153, 155, 157, 159, 161
808-038C	271
808-062C	227, 238
808-147C	227, 231
808-168C	269, 271
808-192C	277
808-262C	227, 231
808-277C	69
808-302C	55
808-309C	53, 55
808-319C	53, 55, 57
808-357C	53, 55, 57
808-387C	53
808-388C	53, 167
808-395C	59, 77, 86, 95
808-415C	59
810-037C	171, 175
810-144C	195
810-158C	203, 207
810-160C	189, 199
810-197C	169
810-249C	191
810-274C	169, 171, 179
810-300C	213
810-342C	171
810-348C	171
810-422C	171
810-423C	169, 171
810-430C	185
810-456C	183
810-491C	191
810-496C	18
810-497C	47
810-507C	187, 197
810-508C	201, 205
810-533C	193
810-555C	9, 169, 171
810-556C	37, 175, 267
810-603C	53, 167
810-606C	47, 169, 171
810-607C	17, 169, 171
810-613C	13
810-614C	13
810-636C	169, 171, 173, 181, 217
810-650C	17
810-651C	47
810-674C	47, 169, 171
810-675C	169, 171
810-696C	167, 253
810-701C	103
810-708C	209, 211
810-744C	18
810-745C	47
810-811C	221
810-833C	18
810-834C	47
811-040C	167
811-063C	167, 169, 171, 173
811-065C	169, 171, 175, 221
811-069C	175
811-073C	211, 253
811-077C	169, 171, 175
811-078C	169, 171, 175
811-086C	171
811-088C	167, 169, 171, 173, 253
811-091C	167
811-125C	211
811-133C	169, 171
811-146C	211
811-150C	13, 167, 169, 171, 173, 175, 213, 253
811-169C	169, 171, 213
811-170C	213
811-171C	211
811-192C	167
811-204C	173
811-216C	171, 213
811-255C	104
811-266C	167
811-269C	211
811-286C	169, 171
811-316C	104
811-324C	13, 175
811-331C	167
811-367C	169, 171
811-386C	211
811-393C	175
811-394C	169, 171
811-430C	169, 171
811-488C	13
811-502C	253
811-564C	167, 253
811-582C	213
811-584C	171, 213
811-636C	171
811-665C	175, 211
811-687C	169, 171
811-715C	253
811-725C	167, 169, 171, 173, 175
811-782C	175
811-826C	177
811-827C	177
811-841C	169, 171, 173
811-846C	167, 211
811-851C	169, 171
811-889C	169, 171
811-908C	169, 171
811-913C	177
811-914C	177
811-915C	177
811-916C	177
811-917C	177
811-918C	177
811-919C	177
811-929C	169, 171
811-957C	169, 171
811-970C	169, 171

Part Number Index (continued)

Part Number	Page
811-978C	169, 171
812-302C	79
812-327C	90
812-328C	79
812-357C	86
812-358C	86
812-374C	103
812-398C	137, 139, 161
812-442C	269
814-034C	129, 131, 141, 165
814-081C	79
814-082C	79
814-083C	79
814-085C	127
814-113C	115
814-157C	143
814-158C	145
814-159C	143
814-160C	145
814-173C	89, 115
814-174C	129, 131, 133, 135, 139, 141, 149, 151, 153, 155, 165
814-175C	115
814-192C	127
814-194C	127
814-206C	48, 51
814-208C	48, 51
814-210C	48
814-238C	125, 133, 135, 147, 149, 151, 153, 155, 165
814-244C	125, 147, 165
814-257C	89, 115
814-258C	115
814-259C	115
814-260C	89, 115
814-261C	115
814-324C	48, 51
814-325C	48, 51
814-326C	51
814-327C	48, 51
814-400C	139, 165
814-507C	48, 51
814-526C	51
814-527C	48, 51
814-549C	48, 51
815-001C	223
815-099C	48, 51
815-101C	51
815-103C	48, 51
815-255C	111, 119
815-627C	48, 51
815-628C	48, 51
815-630C	48, 51
815-631C	48, 51
816-009C	107, 281
816-014C	223
816-019C	48, 51
816-035C	48, 51
816-144C	237, 257
816-170C	23, 225
816-173C	83, 101, 113
816-199C	277, 279
816-245C	23, 261
816-302C	79, 90, 97
816-306C	269
816-409C	37
816-477C	23, 29
816-478C	25
816-479C	25
816-480C	9
816-499C	31
816-502C	25
816-548C	25
816-553C	277
816-587C	53, 57
816-611C	103
816-617C	261
816-648C	59
816-686C	89
816-723C	79
816-725C	23, 29
816-726C	23, 29
816-805C	262
817-018C	279
817-029C	281
817-042C	33, 273
817-051C	281
817-083C	69, 79, 85, 95, 133, 149, 153, 157, 271
817-084C	77, 86, 95, 135, 137, 139, 141, 143, 145, 147, 151, 155, 159, 161
817-129C	262
817-134C	83
817-191C	101, 113
817-206C	279
817-255C	179
817-296C	143
817-297C	145
817-328C	97
817-330C	125, 129, 131, 141, 147, 165
817-331C	115
817-347C	97
817-349C	79, 90, 97
817-358C	227, 231
817-396C	79
817-402C	69
817-403C	69
817-404C	69
817-405C	65, 69
817-406C	69, 85, 95, 227, 231, 269, 271
817-407C	70
817-413C	79
817-425C	65, 69
817-426C	279
817-432C	279
817-433C	279
817-456C	53, 55, 57
817-457C	25
817-480C	77, 85, 95
817-513C	107
817-516C	33, 273
817-529C	70
817-541C	115
817-555C	225
817-556C	23
817-558C	23, 29
817-564C	65
817-565C	63
817-568C	65
817-569C	65
817-595C	31
817-602C	29
817-607C	63
817-610C	31
817-612C	63
817-613C	31
817-614C	31
817-615C	119
817-622C	31
817-624C	37, 267
817-715C	89
817-722C	277
817-723C	277
817-770C	53, 167
817-805C	261
817-813C	53, 55, 57
817-852C	59
817-877C	109
817-886C	165
818-045C	215
818-055C	33, 215, 273
818-181C	13
818-188C	215
818-344C	237, 257
818-351C	215
818-398C	215
818-525C	119
818-557C	215
818-579C	215
818-580C	215
818-587C	215
818-590C	215
820-018C	107
820-094C	223
820-133C	281
820-156C	107
820-256C	79
820-287C	90, 97
820-323C	281
820-327C	281
821-048C	23
821-069C	23
822-020C	107, 228, 231, 269, 281
822-021C	107, 281
822-030C	111, 223
822-033C	228
822-036C	48, 51
822-037C	48, 51
822-038C	48, 51
822-039C	48, 51
822-080C	111, 223
822-095C	79
822-119C	271
822-170C	65, 69, 115, 125, 127, 129, 131, 137, 141, 143, 145, 147, 157, 159, 161, 165
822-175C	53, 57, 271
822-195C	53, 57
822-210C	86, 95
822-215C	111
822-216C	227, 231
822-239C	55, 59, 77, 85, 95
822-240C	228, 231, 269
822-259C	228
823-231C	53, 55, 57
823-327C	59
823-328C	59
823-329C	59
823-330C	43, 59
823-336C	59
823-337C	59
823-365C	60
823-366C	60
823-367C	60
823-368C	60
823-370C	60
823-371C	60
823-372C	60
823-373C	60
823-374C	60
823-375C	60
823-388C	60
823-389C	60
823-390C	60
823-434C	258
823-435C	257
823-445C	209
826-502C	53, 57
827-077C	31
827-078C	31
827-079C	31
827-080C	31
827-081C	31
827-084C	31
827-099C	31
828-057C	119
828-058C	119
828-059C	119
828-060C	119
829-010C	241, 247
829-013C	225, 237
829-048C	249
829-089C	237, 257
829-104C	237, 257
829-105C	237, 257
829-109C	225, 241
829-140C	59
829-141C	103
830-021C	225
830-024C	225
830-028C	237, 257
830-029C	237, 257
830-031C	225
830-043C	237, 257
830-045C	225, 237
830-052C	225
830-061C	237, 257
830-082C	241
830-085C	237, 257
830-087C	237, 257
830-094C	225, 237
830-121C	237, 258
830-123C	225, 237, 257
830-126C	237, 257
830-127C	227, 231, 237
830-133C	227, 231, 237
830-142C	237, 257
830-145C	227, 231, 237
830-149C	225, 241
830-157C	257
830-158C	238, 257
830-174C	225, 241
830-186C	225
830-237C	237, 257
830-254C	241
830-258C	237, 257
830-260C	237, 257
830-295C	225
830-325C	257
830-345C	257
830-368C	257

Part Number Index (continued)

Part Number	Page
830-370C	257
830-380C	225
830-381C	225
830-383C	59, 103, 238, 257
830-390C	257
830-403C	103
830-405C	59, 104
830-417C	103
830-420C	104
830-422C	104
830-423C	103
830-424C	90
830-425C	103
830-426C	104
830-427C	103
830-428C	104
830-429C	103
830-430C	103
830-431C	103
830-434C	104
830-459C	257
830-460C	257
830-462C	257
830-463C	257
831-029C	237
831-068C	227, 231, 237
831-078C	251, 255, 257
831-088C	43, 103
831-121C	253
832-042C	237, 257
832-051C	237, 257
832-052C	237, 257
832-053C	237, 257
832-054C	237, 257
832-055C	237, 257
832-056C	237, 257
833-235C	23, 25, 29, 217
833-515C	171
833-531C	103
833-532C	104
833-533C	104
833-534C	104
833-535C	104
833-537C	103
833-539C	103
833-542C	103
833-559C	103
833-960C	217
833-961C	217
833-975C	217
833-978C	217
833-979C	217
833-981C	217
838-094C	215
838-160C	215
838-161C	215
838-168C	215
838-228C	215
838-229C	29
838-265C	215
838-266C	215
838-267C	215
838-426C	215
838-599C	215
838-763C	215
838-818C	215
838-822C	25, 215
838-823C	225
839-956C	53, 57
841-002C	175
841-008C	171
841-073C	175, 211
841-099C	175
841-103C	171, 175
841-137C	169, 171, 173
841-163C	167, 175, 211
841-196C	167
841-207C	173
841-211C	173
841-215C	169, 171
841-318C	175
841-406C	211
841-503C	103
841-540C	177
841-541C	177
841-542C	177
841-543C	177
841-578C	253
841-930C	211
843-025C	217
843-027C	217
843-028C	217
843-032C	217
843-034C	218
843-055C	218
843-057C	258
843-059C	217
843-065C	217
843-066C	217
843-072C	217
843-097C	217
843-191C	79, 90
848-020C	37
848-049C	269
848-083C	215
848-095C	227, 231
848-101C	269
848-118C	73
848-119C	75
848-377C	215
848-500C	262
848-501C	262
848-502C	262
848-503C	262
848-509C	262
848-510C	262
848-519C	262
848-520C	262
848-522C	262
850-034C	213
850-055C	213
850-066C	167
850-154C	253, 255
850-507C	167
861-463C	253
890-005C	47
890-011C	17, 47
890-032C	48
890-072C	17
890-153C	33, 273
890-193C	17, 47, 51
890-221C	261
890-264C	33, 221, 273
890-311C	45
890-312C	45
890-389C	107, 281
890-395C	267
890-398C	13
890-430C	45
890-431C	45
890-466C	79, 90, 97, 121, 123, 277, 279
890-521C	237, 258
890-522C	225
890-524C	125, 127, 129, 131, 133, 149, 153, 157
890-598C	125, 127, 129, 131, 133, 149, 153, 157
890-600C	45
890-614C	223
890-620C	187, 189
890-624C	37, 267
890-666C	47
890-725C	47
890-856C	63
890-857C	63
890-891C	37, 267
890-899C	37, 267
890-912C	63
890-955C	21
891-131C	37
891-150C	103
891-186C	157, 159, 161
891-191C	85, 95, 271
891-259C	215
891-263C	103
891-670C	13
900M08	73
900MO8	75
990-078R	225
990-080R	237, 241, 258
990-081R	237, 257
990-082R	225, 237, 241, 257
990-109R	59, 238, 257
990-181R	225, 237
990-230R	31
990-262R	104
990-263R	103
990-268R	103
990-269R	103
ACE-10525	225
CP18999-EPR	238, 257
CR14971	111
dwg 25018	223
dwg 29175	23
dwg 29176	27
dwg 38007	213
dwg 38011	211
dwg 38013	209
dwg 38352	251
dwg 38368	255
dwg 38370	253
dwg 38372	257
dwg12024	183
dwg12822	191
dwg14927	179
dwg17663	101, 113
dwg18193	129
dwg18194	131
dwg18406	121, 123
dwg18418	245
dwg18964	185
dwg19901	127
dwg20252	81
dwg20261	125
dwg20297	187, 189
dwg20407	79
dwg21853	89
dwg21855	93, 99
dwg21991	75
dwg21992	73
dwg21993	115
dwg22695	77
dwg22709	63
dwg22744	65
dwg22747	111
dwg22748	119
dwg24430	141
dwg24431	143
dwg24432	145
dwg25220	181
dwg25221	195
dwg25222	193
dwg25489	13
dwg25494	249
dwg25495	247
dwg26100	83
dwg27028	147
dwg27112	97
dwg27171	25
dwg27294	11
dwg27323	69
dwg28419	227
dwg28428	243
dwg29160	9
dwg29163	21
dwg29164	215
dwg29171	29
dwg29177	221
dwg29180	39
dwg29181	37
dwg29190	95
dwg29200	17
dwg29213	31
dwg29218	167
dwg29221	169
dwg29241	175
dwg29245	173
dwg29258	85
dwg29259	53
dwg29260	55
dwg29261	57
dwg29263	47
dwg29265	51
dwg29273	197
dwg29274	199
dwg29289	15
dwg29297	217
dwg29300	225
dwg29308	237
dwg29310	241
dwg29331	133
dwg29332	149
dwg29333	153
dwg29590	163
dwg29601	107
dwg29716	157
dwg29718	261
dwg29723	265
dwg29749	269
dwg29767	271
dwg29815	59
dwg29863	45
dwg31005	267
dwg31009	273
dwg31015	281
dwg31016	277
dwg31111	279
dwg31362	33
dwg31517	155
dwg31518	135

Part Number Index (continued)

Part Number	Page
dwg31519	151
dwg31520	159
dwg31830	117
dwg31842	177
dwg31878	103
dwg32003	231
dwg32352	41
dwg32360	235
dwg32773	201
dwg32799	203
dwg32804	205
dwg32805	207
dwg34090	43
dwg34484	161
dwg34488	137
dwg34565	139
dwg34570	165
dwg34978	109
dwg38171	171
FUSE	218
HS1328	111
HU13	111
LSQ200-PL	245, 251
LSQ200-R	245, 251
LST150-B	245, 251
LST150-G	245, 251
LST150-H	245
LST1580	245, 251
MLST150-H	251
P502001	51
VER-18375	167
VER-18548	167
VER-19798	167
VER-19799	167
VER-19800	167
VER-20317	167

This Page Intentionally Left Blank

Great Plains

Great Plains Mfg., Inc.
1525 E. North Street
Salina, Kansas 67401 USA

www.greatplainsmfg.com