Operating, Maintenance, and Installation Instructions

401-845A, 401-846A, 401-847A, 401-848A, 401-849A, 401-879A, 401-956A, 411-016A, 411-035A, 411-036A, 411-037A, 411-038A, 411-163A, 411-164A, 411-165A, 411-166A, 411-167A and 411-168A

PTO Pump Accessory for
Single Section Air Pro® Planters and Fan Update Kit

Great Plains
Manufacturing, Inc.
www.greatplainsmfg.com

Read the installation manual entirely. When you see this symbol, the subsequent instructions and warnings are serious - follow without exception. Your life and the lives of others depend on it!

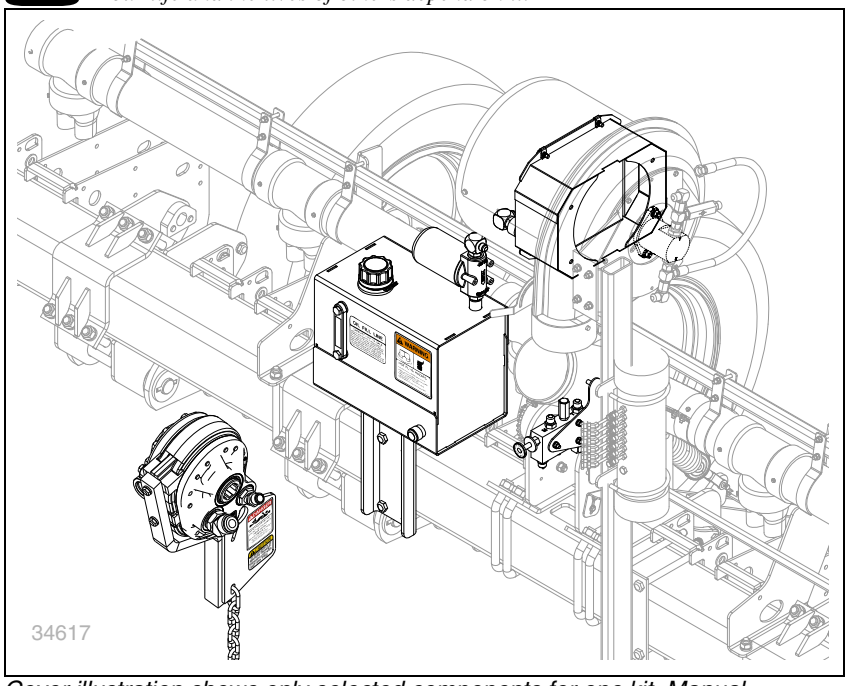

Cover illustration shows only selected components for one kit. Manual illustrations may show various Yield-Pro® planter models and configurations where installation details are identical for the immediate topic.

ORIGINAL INSTRUCTIONS

EN

© Copyright 2017
Printed 2017-11-06 401-885M

Table of Contents

Important Safety Information....1
Safety Decals....4
Introduction....6
Description of Unit....6
PTO Operation....8
Tractor Requirements....8
540 rpm Tractor Requirements....8
1000 rpm Tractor Requirements....9
Hitching with PTO....11
Hitching with 540 rpm PTO....11
Hitching with 1000 rpm PTO....12
Check Hydraulics....14
Check Oil Level....14
Inspect Hoses and Fittings....14
Starting the Pump....15
About the Flow Control Valve....16
Setting Meter Pressurization....17
General Steps for all Kits....17
Ground Drive Meter Pressure....18
Hydraulic Drive Meter Pressure....19
PTO Unhitching....20
Dismount 540 rpm Pump....20
Dismount 1000 rpm Pump....20
PTO Troubleshooting....21
PTO Maintenance....22
Oil and Filter Change....22
Oil Fill....22
Oil and Filter Change....22
Lubrication and Scheduled Maintenance....23
Appendix A - Installation....25
Before You Start....25
Compatible Planters....25
Fan Motor Compatibility....25
Configuration Compatibility....26
2025A/2525A Compatible Kits....26
YP425A Compatible Kits....26
YP625A Compatible Kits....26
YP825A/AR Compatible Kits....26
Other Single-Section Air-Pro® Implements....26
Tools Required....27
Call-Outs....27
Pre-Delivery and Other Options....27
Prepare Planter....27
Prepare Fan....28
Disconnect Existing Fan Hoses....28
Open Fan Screen....29
Dismount or Relocate Sensor Bracket....30
Update Fan Motor....31
Install Fan Cooler....37
Install Fan Cooler....37
Reconnect Hitch Hoses....40
Install Oil Reservoir....41
Determine Reservoir Location....41
Reservoir on Row Unit Tool Bar....42
Reservoir on Fertilizer Sub-Frame....44
Reservoir on Mainframe Truss....45
Reservoir Under Main Seed Box....46
Reservoir on Tongue at Hitch....47
Install Flow Control Valve....48
Determine Control Location....48
Install Controls on Fan Mast....49
Install Controls on Fertilizer Frame....49
Install Controls on Upper Frame Tube....50
Install Controls on Forward Tool Bar....51
Install Hoses....52
General Hose Installation....52
401-845A and 411-163A Flow Control Hydraulics....52
401-846A and 411-164A Flow Control Hydraulics....53
401-847A and 411-165A Flow Control Hydraulics....54
401-848A and 411-166A Flow Control Hydraulics....55
401-849A and 411-167A Flow Control Hydraulics....56
401-879A and 411-168A Flow Control Hydraulics....57
411-016A Flow Control Hydraulics....58
411-035A and 411-036A Flow Control Hydraulics....59
411-037A and 411-038A Flow Control Hydraulics....60
Charge and Test....62
Close-Out....62
Appendix R - Reference....63
Torque Values....63
Hydraulic Fitting Torque....64
Abbreviations....65
Parts Lists....66
Kits and This Manual....66
New Parts in Kits....66
Existing Parts Affected....68

© Copyright 2013, 2014, 2017 All rights Reserved

Great Plains Manufacturing, Inc. provides this publication “as is” without warranty of any kind, either expressed or implied. While every precaution has been taken in the preparation of this manual, Great Plains Manufacturing, Inc. assumes no responsibility for errors or omissions. Neither is any liability assumed for damages resulting from the use of the information contained herein. Great Plains Manufacturing, Inc. reserves the right to revise and improve its products as it sees fit. This publication describes the state of this product at the time of its publication, and may not reflect the product in the future.

Trademarks of Great Plains Manufacturing, Inc. include: AccuShot, Max-Chisel, Row-Pro, Singulator Plus, Short Disk, Swath Command, Terra-Tine, Ultra-Chisel, and X-Press.
Registered Trademarks of Great Plains Manufacturing, Inc. include: Air-Pro, Clear-Shot, Discovator, Great Plains, Land Pride, MeterCone, Nutri-Pro, Seed-Lok, Solid Stand, Terra-Guard, Turbo-Chisel, Turbo-Chopper, Turbo-Max, Turbo-Till, Ultra-Till, Whirlfilter, and Yield-Pro.
Brand and Product Names that appear and are owned by others are trademarks of their respective owners.

Printed in the United States of America

Important Safety Information

PTO-Specific Hazards

Even if you are experienced in PTO operations, review the "**Using PTO Safely**" topic on page 2. Topics in this manual dealing with PTO hazards include this PTO alert symbol and the standard alert symbol below.
PTO hazards include:

- ***Entanglement:***
  resulting in abrasions, lacerations, crushing, dismemberment or death. Loose clothing, cuffs, frays, laces, coattails, drawstrings, hair or scarves are taken up by a PTO faster than you can react, and with overpowering torque.
- ***Flailing machinery:***
  resulting from an unsecured torque arm, resulting in serious injury or death.
- ***High pressure fluid sprays:***
  due to hydraulic hose failure, resulting from PTO shaft over-speed or damaged hoses.

Look for Safety Symbol

The SAFETY ALERT SYMBOL indicates there is a potential hazard to personal safety involved and extra safety precaution must be taken. When you see this symbol, be alert and carefully read the message that follows it. In addition to design and configuration of equipment, hazard control and accident prevention are dependent upon the awareness, concern, prudence and proper training of personnel involved in the operation, transport, maintenance and storage of equipment.

Be Aware of Signal Words

Signal words designate a degree or level of hazard seriousness.

DANGER indicates an imminently hazardous situation which, if not avoided, will result in death or serious injury. This signal word is limited to the most extreme situations, typically for machine components that, for functional purposes, cannot be guarded.

WARNING indicates a potentially hazardous situation which, if not avoided, could result in death or serious injury, and includes hazards that are exposed when guards are removed. It may also be used to alert against unsafe practices.

CAUTION indicates a potentially hazardous situation which, if not avoided, may result in minor or moderate injury. It may also be used to alert against unsafe practices.

Using PTO Safely

The accessories covered by this manual rely on PTO power to operate, and require an adjustment at the planter while the PTO is running. The PTO pump is designed to work on a stub shaft PTO, and leaves no exposed shaft in use.

- *Use only a tractor with an approved master shield for the PTO.*
- *Use all guards provided for the tractor PTO. Have minimal or NO shaft exposed after connecting the PTO pump.*
- *Use only a rear-facing PTO. The provided hoses and torque arms are not designed for use with a tractor-front or tractor-side PTO.*
- *Use only the correct (540 or 1000) rpm PTO, or an adjustable PTO set to the correct rpm (maximum). Running at a higher speed could result in equipment failure, and serious injury.*
- *Use only a PTO with the correct shaft, and for 1000 rpm, matching Great Plains coupler:*
  $1\frac{3}{8}$ inch (35 mm) 6-spline
  $1\frac{3}{4}$ inch (44.5 mm) 20-spline and 826-777C coupler
  $1\frac{3}{8}$ inch (35 mm) 21-spline and 826-778C coupler
- *Do not use any other adaptor, coupler, driveline, extender or external gearbox.*
- *Use only a "live" or "independent" PTO. If the PTO only operates when the tractor is in motion, there is no safe way to set the fan speed.*
- *Ensure that all involved personnel are trained on PTO operations and hazards. Always know where all team members are before, during and after PTO operations.*
- *Allow only essential personnel near the PTO during setup, adjustment, operation and disconnection.*
- *Prior to PTO setup, remove any stray wire, rope or twine found nearby. Should a loose end encounter the PTO stub, it is taken up at up to 14 feet per second, and could wrap around someone and pull them in.*
- *Wear only snug-fitting clothes, with no scarves, loose strings, cords, ties, and no frays, when working near a PTO.*
- *Tie long hair back or gather it up under a well-secured hat.*
- *Shut the tractor off for PTO connections or disconnections. Do not trust your life to clutches and throw-outs.*
- *A PTO shaft is a hazard at any speed, even when well below rated shaft rpm, coasting to a stop, or idling.*
- *Never step on or over the master shield or installed PTO pump.*
- *Be extra vigilant if any tractor PTO controls are external, and in proximity to the PTO.*
- *Elevate pump hose slack so that ground contact is not possible during transport or field operations.*
- *Keep all PTO safety decals clean and legible. Replace any that are faded or damaged.*

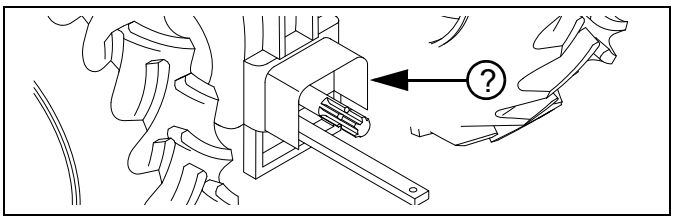

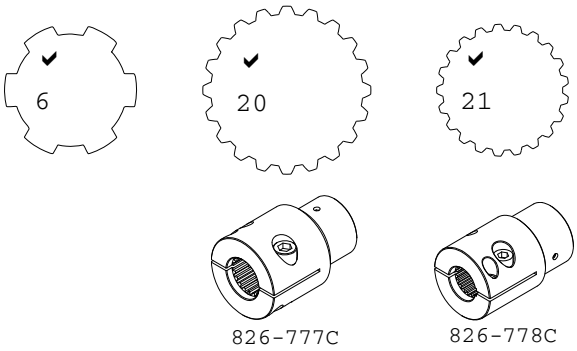

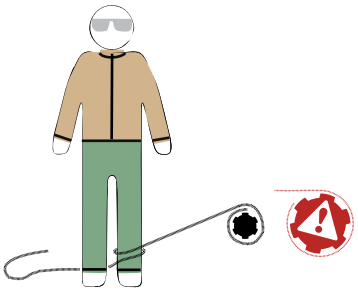

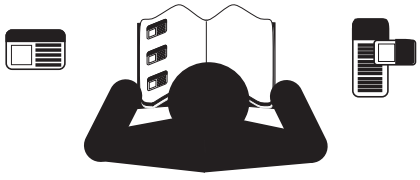

Prepare for Emergencies

- *Be prepared if a fire starts.*
- *Keep a first aid kit and fire extinguisher handy.*
- *Keep emergency numbers for doctor, ambulance, hospital and fire department near phone.*

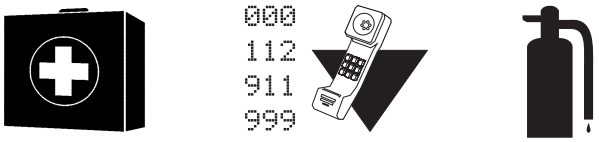

Be Familiar with Safety Decals

- *Read and understand "**Safety Decals**" in the Operator manual.*
- *Read all instructions noted on the decals.*
- *Keep decals clean. Replace damaged, faded and illegible decals.*

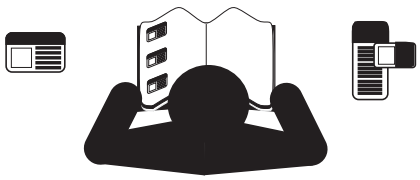

Avoid High Pressure Fluids

Observe normal precautions for hitch hydraulic connections and disconnections. Escaping fluid under pressure can penetrate the skin, causing serious injury.

- *Avoid the hazard by relieving pressure before disconnecting hydraulic lines.*
- *Wear protective gloves and safety glasses or goggles when working with hydraulic systems.*
- *If an accident occurs, seek immediate medical assistance from a physician familiar with this type of injury.*

Practice Safe Maintenance

- *Understand procedure before doing work. Use proper tools and equipment. Refer to this manual for additional information.*
- *Work in a clean, dry area.*
- *Lower the planter, put tractor in park, turn off engine, and remove key before performing maintenance.*
- *Make sure all moving parts have stopped and all system pressure is relieved.*
- *Inspect all parts. Make sure parts are in good condition and installed properly.*
- *Remove buildup of grease, oil or debris.*
- *Remove all tools and unused parts from planter before operation.*

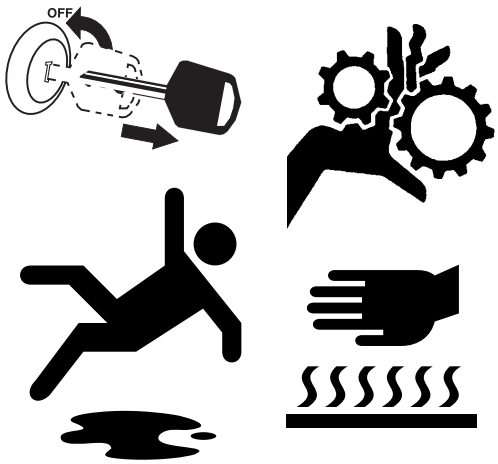

Safety At All Times

- *Thoroughly read and understand the instructions in this manual before operation. Read all instructions noted on the safety decals.*
- *Be familiar with all implement functions.*
- *Operate machinery from the driver's seat only.*
- *Do not leave implement unattended with tractor engine running.*
- *Wear snug-fitting clothing to avoid entanglement with moving parts.*

Safety Decals

Safety Decals

Kit components are shipped with all safety decals in place. They are intended to help you safely operate your implement.

- ▲ *Read and follow decal directions.*
- ▲ *Keep all safety decals clean and legible.*
- ▲ *Replace all damaged or missing decals. Order new decals from your Great Plains dealer. Refer to this section for proper decal placement.*
- ▲ *When ordering new parts or components, also request corresponding safety decals.*

To install new decals:

1. Clean the area on which the decal is to be placed.
2. Peel backing from decal. Press firmly on surface, being careful not to cause air bubbles under decal.

Danger Decals

858-005C

Danger: Rotating Driveline

On chain plate of torque arm at pump, for pumps with wide plates, otherwise on front face of oil reservoir;
1 total

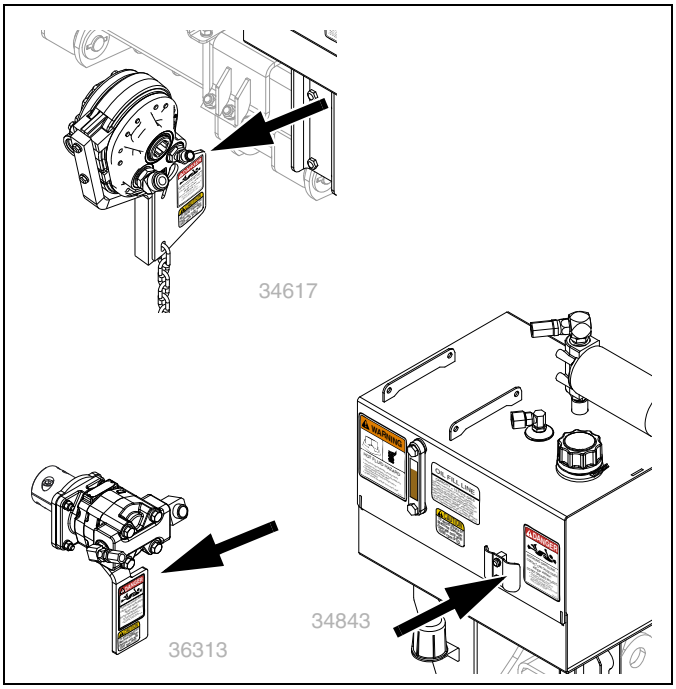

Warning Decals

858-004C

Warning: Hot Fluid

On front face of oil reservoir;
1 total

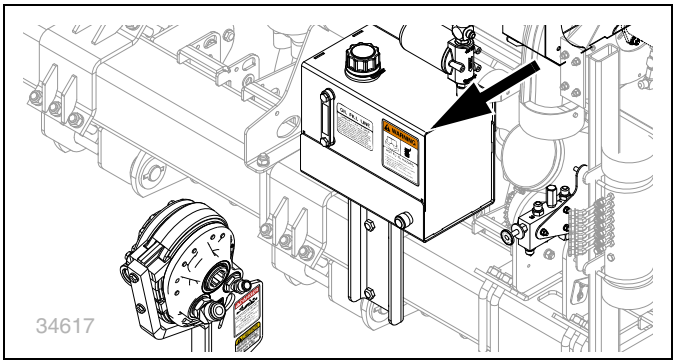

Caution Decals

818-130C

Caution: 540 RPM PTO

On chain plate of torque arm at 540 rpm pump;
1 total (540 rpm kits only)

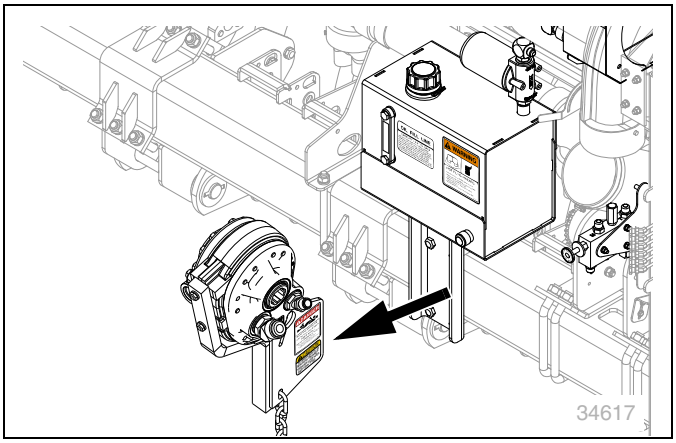

818-240C

Caution: 1000 RPM PTO

On chain plate of torque arm at pump, for pumps with wide plates, otherwise on front face of oil reservoir;
1 total (1000 rpm kits only)

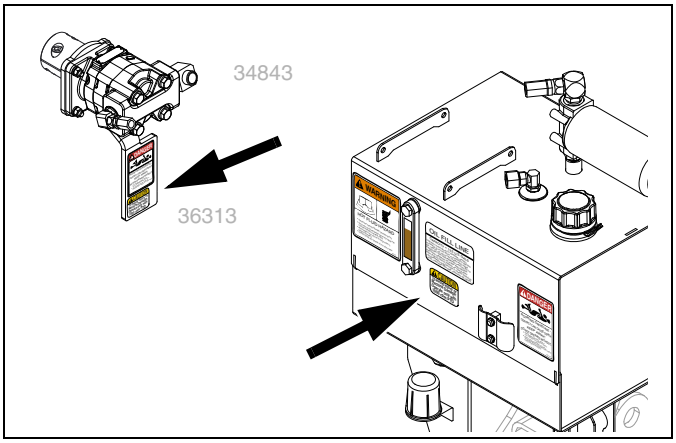

Introduction

Description of Unit

One of 17 dealer- or field-installed kits convert the hydraulic fan power source from tractor hydraulic remote to tractor Power Take-Off (PTO). An additional kit updates older fan motors for PTO compatibility.

Refer to Figure 1

Each Single-Section PTO Pumps kit includes:

- a flow control valve assembly ① for setting fan rpm,
- a tethered 540 or 1000 rpm PTO pump ②, with torque arm and safety chain (no gearbox is required; a coupler is required for the 1000 rpm pump),
- an oil reservoir ③, with sight gauge, line filter and 6.5 gallon capacity (5.5 gallons/21 liters, used),
- an oil cooler ④, mounted inside the fan, and;
- all interconnecting hoses (not shown).

There are separate kits for rigid and rotating planters, pull-type and 3-point planters, planters with and without fertilizer capability and ground drive vs. hydraulic drive.

Suitable Applications

A PTO kit may be needed where:

- the tractor has an Open Center hydraulic system;
- the tractor has no remote port for the fan; or,
- the tractor is Closed Center, but the remotes offer insufficient oil flow to reliably operate the fan.

Related Documents

401-885M	PTO Operation, Maintenance and Installation (this document)
118-999B	Material Rate manual, 2025A and 2525A
118-999M	Operator manual, 2025A and 2525A
118-999P	Parts manual, 2025A and 2525A
401-651M	Operator manual, YP425A, YP625A and YP825A pull-type models
401-651B	Material Rate manual, YP4/6/825A/3P
401-652P	Parts manual, YP4/6/825A pull-type
401-652M	Operator manual, YP425A3P, YP625A3P and YP825A3P three-point models
401-652P	Parts manual, YP4/6/825A 3-point
401-923M	Operator manual, YP825AR rotating
401-923B	Material Rate manual, YP825AR
401-923P	Parts manual, YP825AR

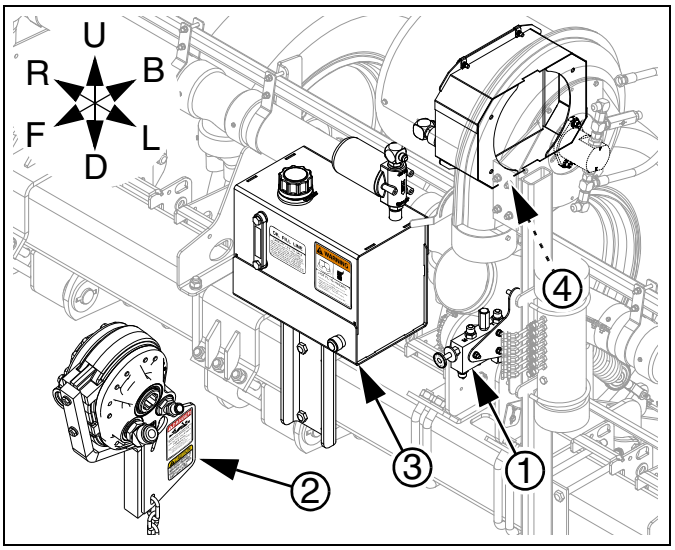

Figure 1: 34617
PTO Kit Major Components

Kits Covered

401-845A	YP4-6-8 PTO 540 3PT ASSY
401-846A	YP4-6-8 PTO 540 NO FERT PULL
401-847A	YP4-6-8 PTO 540 DRY FERT ASSY
401-848A	YP4 PTO 540 LIQ FERT ASSY
401-849A	YP6-8 PTO 540 LIQ FERT ASSY
401-879A	YP8RW 3PT PTO 540 ASSY
401-956A	YP4,6,8 FAN UPDATE
411-016A	20A,25A PTO PUMP KIT
411-035A	YP825R PTO HYD PUMP GND DV 540
411-036A	YP825R PTO HYD PUMP GND DV1000
411-037A	YP825R PTO HYD PUMP HYD DV 540
411-038A	YP825R PTO HYD PUMP HYD DV1000
411-163A	YP4-6-8 PTO 1000 3PT ASSY
411-164A	YP4-6-8 PTO 1000 NO FERT PULL
411-165A	YP4-6-8 PTO 1000 DRY FERT ASSY
411-166A	YP4 PTO 1000 LIQ FERT ASSY
411-167A	YP6-8 PTO 1000 LIQ FERT ASSY
411-168A	YP8RW 3PT PTO 1000 ASSY

See “**Compatible Planters**” starting on page 25 for more details. Kits for 2- and 3-section planters are covered in separate manual 411-015M.

Related Parts

The 1000 rpm PTO kits require one of two tractor-specific couplers, not included with the PTO kit.

20-Spline Coupler

(210) 826-777C 1 3/4-20 PTO COUPLER

21-Spline Coupler

(211) 826-778C 1 3/8-21 PTO COUPLER

Using This Manual

This manual familiarizes you with safety, operation, adjustments, maintenance and assembly. Follow the recommendations to ensure safe and efficient operation.

Definitions

The following terms are used throughout this manual.

NOTE:
Paragraphs in this format provide useful information related to the current topic.

NOTICE

Liability, Economic and Results Risks:
Paragraphs in this format present a crucial point of information related to the current topic. Read and follow the directions to: remain safe, avoid serious damage to equipment and ensure desired field results.

Right-hand and left-hand as used in this manual are determined by facing the direction the machine will travel while in use unless otherwise stated.

An orientation rose (shown at right) depicts Up, Right, Back, Down, Left and Front.

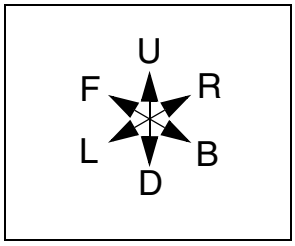

Call-Outs

① to ⑨ and ⓐ to ⓩ	Single-character callouts identify components in the currently referenced Figure or Figures. Numbers and letters may be reused for different items on other pages.
(11) to (53)	Two-digit callouts identify the same existing parts throughout this manual. See page 68 for a list of these parts and their disposition.
(101) to (244)	Three-digit callouts identify the same new parts throughout this manual. See page 66 for a list of these parts.

The information in this manual is current at printing. Some parts may change to assure top performance.

Owner Assistance

If you need customer service or repair parts, contact a Great Plains dealer. They have trained personnel, repair parts and equipment specially designed for Great Plains products. Your machine's parts were specially designed and should only be replaced with Great Plains parts.

Record your Air-Pro® PTO pump kit model number here for quick reference:

Model Number:_____

Date Purchased: _____

Further Assistance

Great Plains Manufacturing, Inc. and your Great Plains dealer want you to be satisfied with your new Air-Pro® PTO pump. If for any reason you do not understand any part of this manual or are otherwise dissatisfied, please take the following actions first:

1. Discuss the matter with your dealership service manager. Make sure they are aware of any problems so they can assist you.
2. If you are still unsatisfied, seek out the owner or general manager of the dealership.

If your dealer is unable to resolve the problem or the issue is parts related, please contact:

Great Plains Service Department
1525 E. North St.
P.O. Box 5060
Salina, KS 67402-5060

Or go to www.greatplainsag.com and follow the contact information at the bottom of your screen for our service department.

PTO Operation

Tractor Requirements

Tractor requirements are different for 540 rpm pumps (below) and 1000 rpm pumps (page 9).

540 rpm Tractor Requirements

The 540 rpm Air-Pro® PTO pump accessories require a tractor with:

Refer to Figure 2

- a rear-facing ASABE or ASAE Type 1 PTO stub shaft ⑤ with master shield ⑥
  shaft: $1^3/_8$ inch (35 mm) 6-spline,
  clockwise rotation (as viewed from tractor rear, facing forward),
- a live or independent PTO drive system, that can be operated with the tractor stationary,
- a fixed or available shaft speed of 540 rpm, and an available PTO power output of 5 hp (3.7 kW),
- a drawbar ⑦ that engages the torque arm of the PTO pump assembly, and
- a chain anchor point ⑧ - a stable, non-moving component of the tractor, within reach of the pump's torque arm chain.

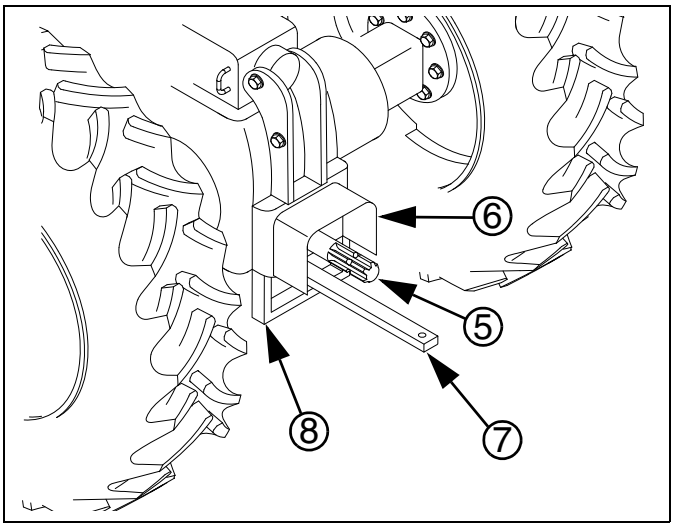

Figure 2:
Tractor PTO

34618

540 rpm PTO Clearance

If the tractor PTO is not known to conform to Type 1 specifications, check the following pump-specific clearance dimensions:

Refer to Figure 3

a. Shaft to master shield top:
3.5 inches (8.9 cm) minimum
or hinged lid

b. Shaft to master shield sides:
5.0 inches (12.7 cm) minimum

c. Shaft to drawbar top:
9 inches (22.8 cm) minimum
15 inches (38.1 cm) maximum
It may be necessary to invert an offset drawbar, or relocate or remove any clevis installed on the drawbar.

d. Shaft to ground:
16 inches (40.6 cm) minimum

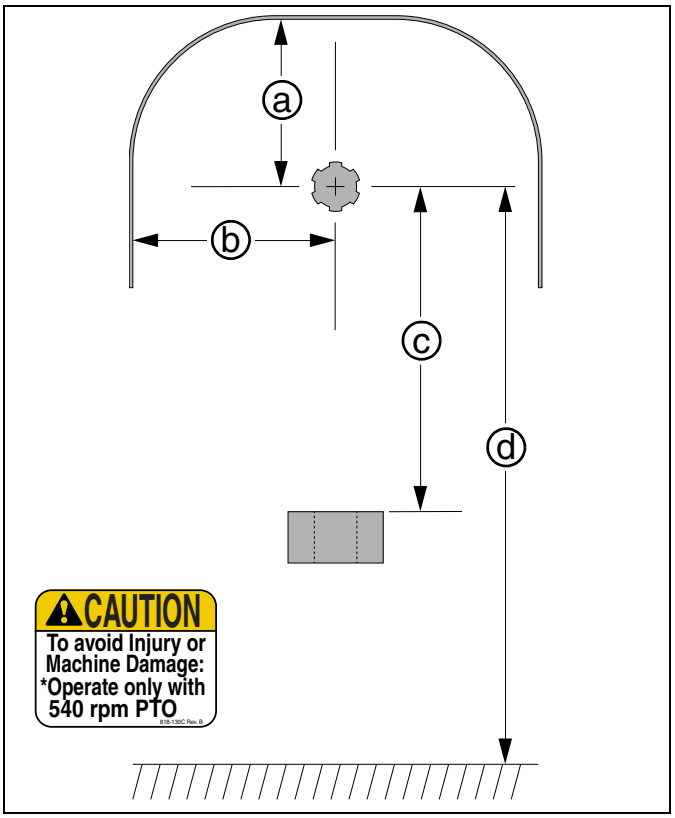

Figure 3:
Tractor PTO Clearances

34623

1000 rpm Tractor Requirements

540 rpm tractor requirements are on page 8. The 1000 rpm Air-Pro® PTO pump accessories require a tractor with:

Refer to Figure 2

- a rear-facing ASABE or ASAE Type 2 or Type 3 PTO stub shaft ⑤ with master shield ⑥
  $1^3/_4$ inch (44.5 mm) 20-spline
  $1^3/_8$ inch (35 mm) 21-spline
  clockwise rotation (as viewed from tractor rear, facing forward),
- a live or independent PTO drive system, that can be operated with the tractor stationary,
- a fixed or available shaft speed of 1000 rpm, and an available PTO power output of:
  20 hp (15 kW): Air-Pro® with ground drive meters
  40 hp (30 kW): Air-Pro® with hydraulic drive meters
- and a drawbar ⑦ that engages the torque arm of the PTO pump assembly.

1000 rpm Type 2 PTO Clearance

If the tractor PTO is not known to conform to Type 2 specifications, check the following pump-specific clearance dimensions:

Refer to Figure 3

a. Shaft to master shield top:
3.5 inches (8.9 cm) minimum
or hinged lid

b. Shaft to master shield sides:
5.0 inches (12.7 cm) minimum

c. Shaft to drawbar top:
9 inches (22.8 cm) minimum
15 inches (38.1 cm) maximum
It may be necessary to invert an offset drawbar, or relocate or remove any clevis installed on the drawbar.

d. Shaft to ground:
16 inches (40.6 cm) minimum

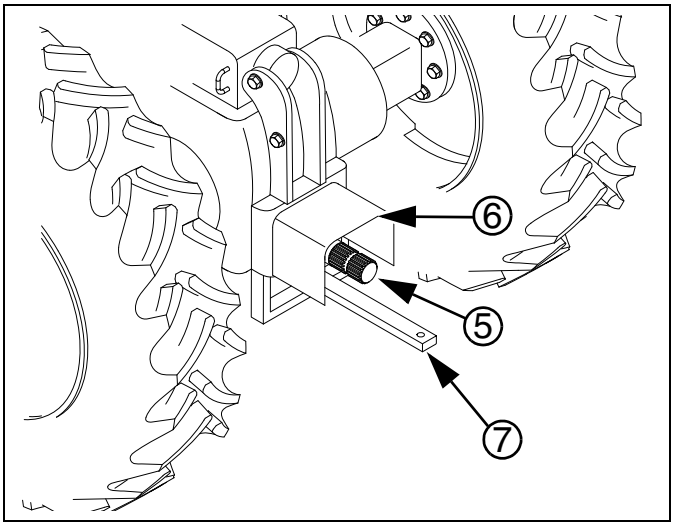

Figure 4:
Tractor PTO
34842

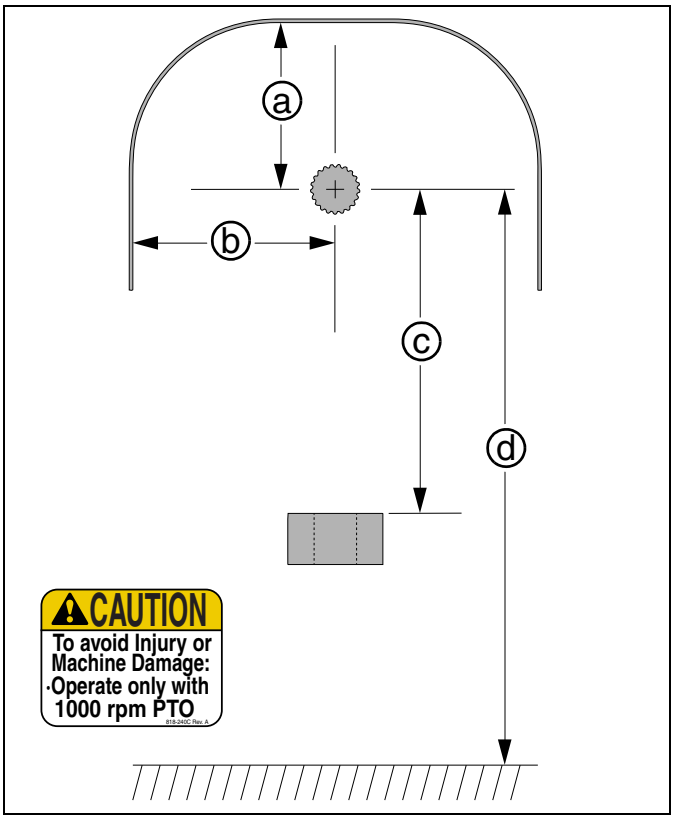

Figure 5:
Type 2 PTO Clearances
34844

1000 rpm Type 3 PTO Clearance

If the tractor PTO is not known to conform to Type 3 specifications, check the following pump-specific clearance dimensions:

Refer to Figure 3

a. Shaft to master shield top:
5.9 inches (15.0 cm) minimum
or hinged lid

b. Shaft to master shield sides:
7.0 inches (17.8 cm) minimum

c. Shaft to drawbar top:
8.6 inches (22.0 cm) minimum
13.75 inches (35.0 cm) maximum
It may be necessary to invert an offset drawbar, or relocate or remove any clevis installed on the drawbar.

d. Shaft to ground:
16 inches (40.6 cm) minimum

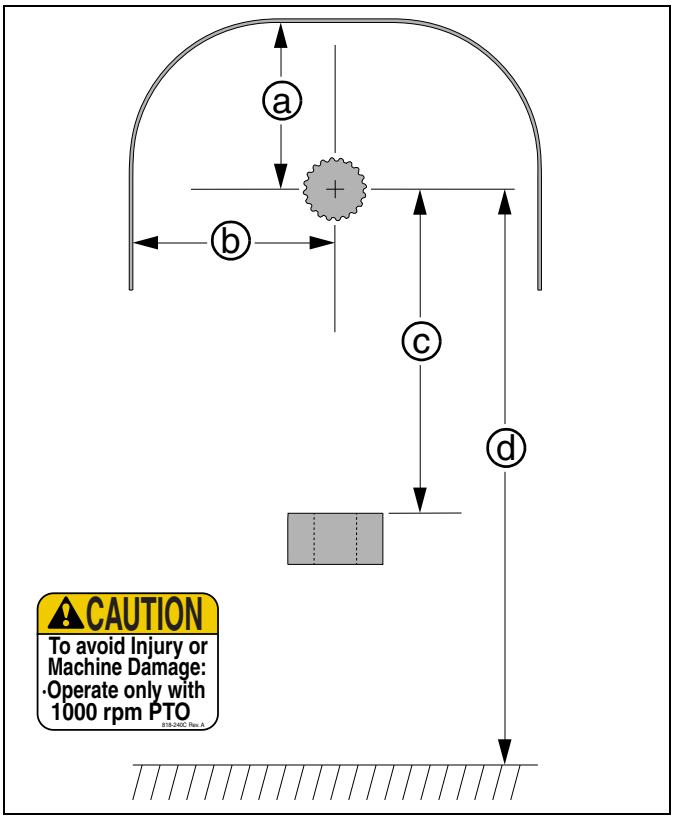

Figure 6:
Type 3 PTO Clearances

34845

Hitching with PTO

Hitching procedures are different for 540 rpm pumps (below) and 1000 rpm pumps (page 12).

Hitching with 540 rpm PTO

The pump may be installed before or after hitching the planter to the tractor. With a 3-point planter, installing the pump first may be easier.

Prepare Tractor

1. Back the tractor into close proximity to the planter (within pump hose reach of the PTO shaft).
2. Shut down the tractor and remove the key.

DANGER

Entanglement and Crushing Hazard:
Never perform any mechanical adjustment, PTO setup or hitching with the tractor running. Take no chances that the PTO might become active. Entanglement or flailing equipment can cause serious injury or death faster than you can react.

Refer to Figure 7

3. Make any necessary adjustment to the tractor drawbar ①. This might include:
   inverting an offset drawbar, and/or
   relocating a clevis assembly (not shown).

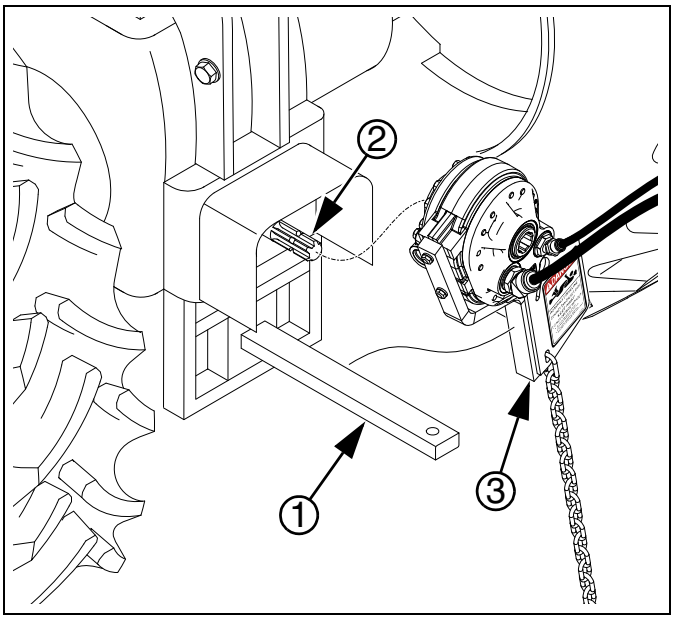

Figure 7:
Mount PTO Pump
34620

DANGER

Entanglement and Flailing Equipment Hazards:
Do not use a driveline, shaft extension, adaptor or external gearbox with the PTO pump. Use only a native 540 rpm 6-spline stub shaft. Extra fittings create entanglement hazards. Fittings also destabilize the shaft, and may make it impossible to adequately secure the pump against torque and shaft slip.

Mount Pump

4. Clear the PTO shaft ② of any pins or wires that might prevent the pump from fully seating on the shaft.
5. With hydraulic hoses to rear, and torque arm ③ to right of drawbar, slide the pump assembly fully onto the PTO shaft.

Secure Pump

Refer to Figure 8 (shown with pump off for clarity)

6. With the torque arm firmly against the drawbar:
   loop the chain once ④ around the drawbar,
   then through the anchor point ⑤,
   then around the drawbar ① at least once more,
   then through the keyhole slot ⑦ in the torque plate.

   The drawbar loops prevent pump rotation.
   The anchor loop retains the pump on the PTO shaft.

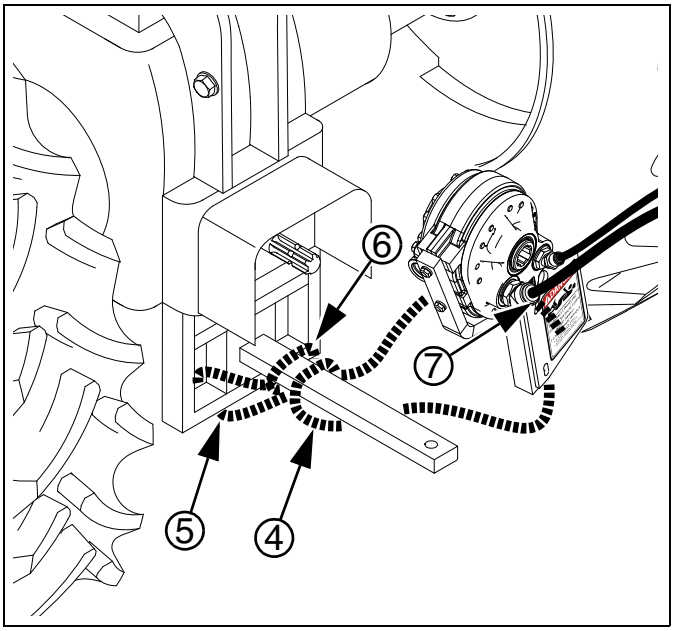

Figure 8:
Route Pump Chain
34622

Refer to Figure 9

7. At least one full chain link must be exposed at the slot ⑦ on the decal side of the torque arm plate.

   If there are more than a few chain loops left at the plate keyhole, route any excess chain through the anchor point and/or around the drawbar.
8. Do NOT use any pins, cross-bolts or wires to secure the pump to the PTO shaft. Such fasteners are not required for safe pump operation, and would add a needless entanglement hazard.
9. Pull and twist the pump assembly to verify that the chain is sufficiently taut to prevent excess pump rotation or sliding along the PTO shaft.
10. Complete normal planter hitching.

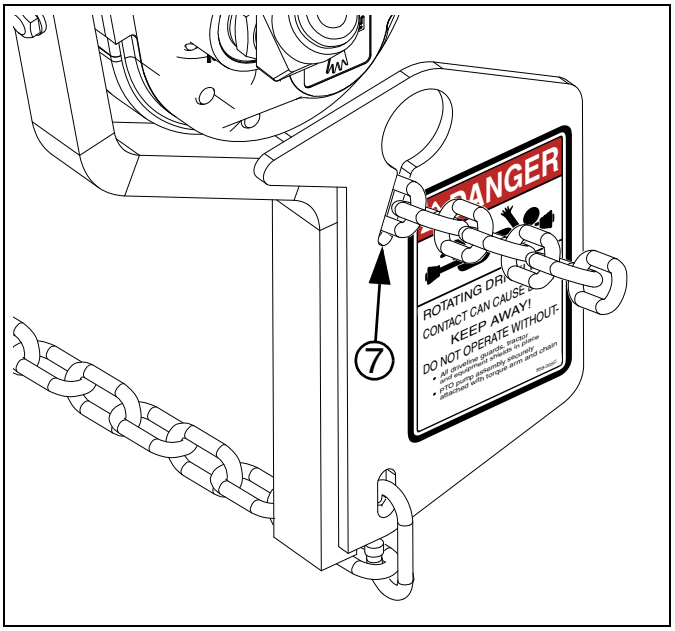

Figure 9: 34627
Secure Pump Chain

Hitching with 1000 rpm PTO

540 rpm hitching begins on page 11.

The 1000 rpm pump may be installed before or after hitching the planter to the tractor.

Install Coupler

The 1000 rpm PTO kits require one of two tractor-specific couplers, not included with the PTO kit:

210 826-777C 1 3/4-20 PTO COUPLER
211 826-778C 1 3/8-21 PTO COUPLER

Refer to Figure 10 (showing coupler 826-778C)

1. Loosen both set screws (243 and 244) at the narrow end of the coupler. Note that they are different sizes.
2. Rotate the coupler until the internal keyway aligns with the key on the pump shaft. Slide the coupler onto the pump shaft.
3. Tighten both set screws to the Grade 5 torque specification for each thread size.

To remove or exchange a coupler at a later time, first dismount the pump assembly from the tractor PTO shaft, then loosen both set screws.

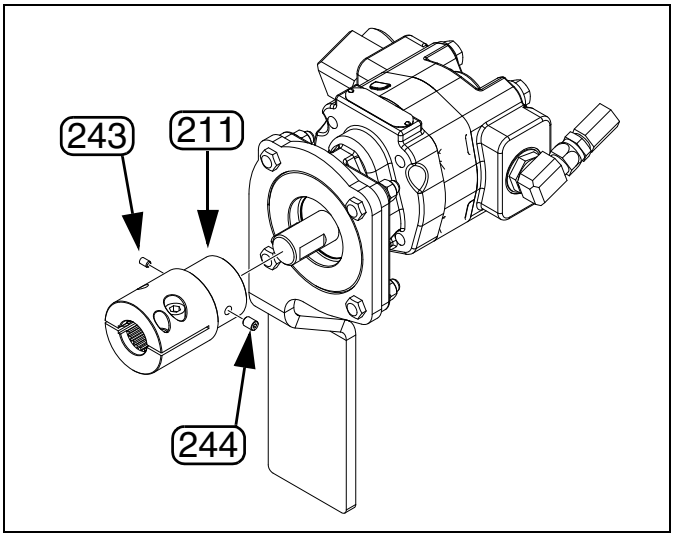

Figure 10: 36316
Secure Coupler to Pump

Prepare Tractor

Refer to Figure 11

4. Completely remove the socket head cap screws ① from the coupler ②.

📖 **NOTE:**
If the coupler is not mounted, or you need to change to a different coupler, see page 12.

5. If space is constrained inside the tractor PTO shield, rotate the coupler to an orientation that eases later inserting and tightening of the cap screws.
6. Back the tractor into close proximity to the planter (within pump hose reach of the PTO shaft).
7. Shut down the tractor and remove the key.
8. Make any necessary adjustment to the tractor drawbar ③. This might include:
inverting an offset drawbar, and/or
relocating a clevis assembly (not shown).
9. Clear the PTO shaft ④ of any pins or wires that might prevent the pump from fully seating on the shaft.

Mount Pump

10. With hydraulics hoses to rear, and torque arm ⑤ to right of drawbar, slide the pump assembly fully onto the PTO shaft ④.
11. Insert one socket head cap screw ① into the larger counter-sunk clamping holes ⑦ in the aft end of the coupler. The screw head fully seats, below the surface of the coupler, in these holes.

NOTICE

Equipment Damage Risk:
Use the clamping holes ⑦. Do not use the drive-out holes ⑧ (the smaller forward holes that are threaded to the surface). Drive-out holes are used only during dismount. The screws only partially thread into these holes. These holes do not adequately secure the pump to the shaft. The screws are likely to fall out if these holes are used for pump mounting.

12. Adjust the position of the coupler on the shaft until the screw threads are in the shaft groove ⑥. Thread screw in until finger tight.
13. Insert the other socket head cap screw in the other side of the coupler. Thread it until finger tight.
14. Pull and twist the pump assembly to verify that both retention screws have engaged the PTO shaft grove and prevent the pump from sliding along the PTO shaft.
15. Tighten both cap screws to $^{1}/_{2}$-13 Grade 8 torque specification (105 foot-pounds, 145 N-m).
16. Complete normal planter hitching.

DANGER

Entanglement and Crushing Hazard:
Never perform any mechanical adjustment, PTO setup or hitching with the tractor running. Take no chances that the PTO might become active. Entanglement or flailing equipment can cause serious injury or death faster than you can react.

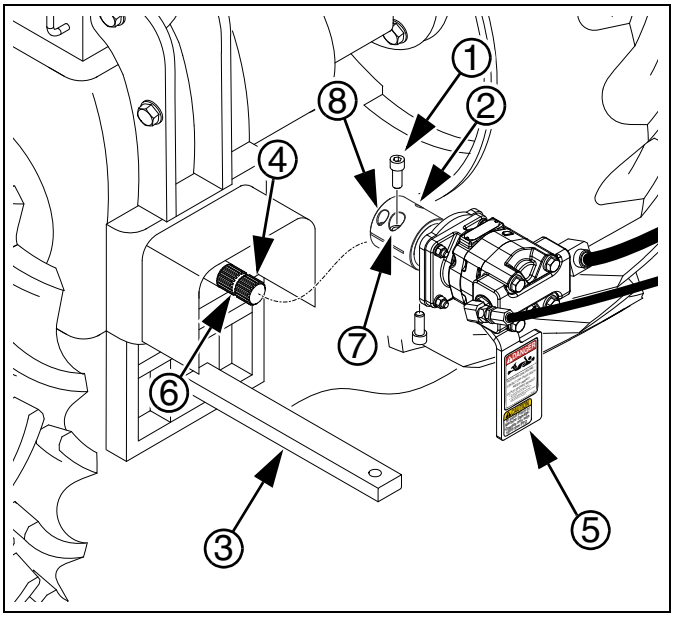

Figure 11: 36317
Mount PTO Pump

DANGER

Entanglement and Flailing Equipment Hazards:
Do not use a driveline, shaft extension, adaptor or external gearbox with the PTO pump. Use the pump, with a Great Plains coupler, only on a native 1000 rpm 20- or 21-spline stub shaft. Extra fittings create entanglement hazards. Fittings also destabilize the shaft, and may make it impossible to adequately secure the pump against torque and shaft slip.

Check Hydraulics

Check Oil Level

Refer to Figure 12

1. Verify that the planter is level front to back and side to side.
2. Inspect the sight gauge ⑧ on the pump system reservoir tank. The oil level ⑨ must be aligned with the center border of the OIL FILL LINE decal (858-003C).

WARNING

Hot Surface and Hot Fluid Hazards:
Assess the tank temperature before adjusting oil level. Draining excess hot oil could result in a severe burn. If the PTO has been operated recently, the oil temperature could be as high as 180°F (82°C).

3. Add or drain oil as needed to obtain the correct amount. Some adjustment is normally required with a new system, or after a filter change.

NOTE:
The fill level dimension from tank bottom is:
ⓐ 9.15 inches (23.2 cm)
If the 858-003C decal requires replacement, adjust the center border line to this height.

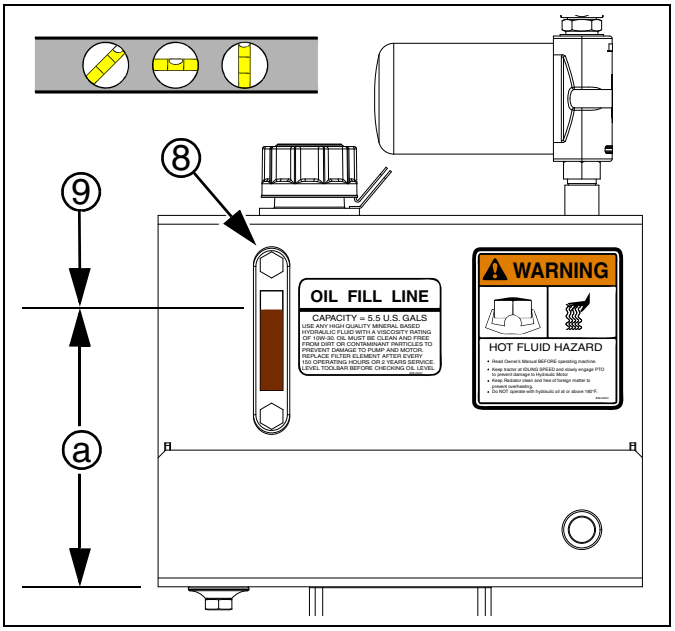

Figure 12:
Check Oil Level
34625

Inspect Hoses and Fittings

4. Check that all hydraulic fittings are tight and dry. Inspect all hoses for damage, wear and fatigue. Because the PTO pump system is closed, any visible fluid may be an indication of a leak.

Starting the Pump

While the planter is stationary, it may be necessary to briefly operate the pump for any of several reasons:

- verify system installation or PTO operation.
- verify oil level with system fully charged.
- set initial meter pressurization.

Refer to Figure 13

1. If the system is adjusted, leave the flow control valve as-is.

   If the system is not yet adjusted, close the flow control valve to prevent fan motion. Turn the lock disc ① counter-clockwise to release the knob ②. Turn the knob fully clockwise to close the valve.
2. Clear the hitch area of non-essential persons. Check essential personnel for long hair, scarfs, cords, frays, loose flaps and anything else that might get entangled. Clear the area of dangling or loose wires, straps, cord and other lines that might become entangled and pull someone in.
3. It is not necessary to run the PTO at the full 540 or 1000 rpm. You may run it any lower speed that provides sufficient meter pressurization (page 17).

NOTICE

Equipment Damage Risk:
Do not START the pump and fan suddenly at high PTO speed. Engage the PTO clutch slowly (if possible) and/or at low engine rpm, and gradually increase PTO rpm. The hydraulic fan can be damaged by sudden acceleration.

4. • Check that tractor is in Park or Neutral.
   • Check parking brake set.
   • Set the tractor PTO controls for 540 or 1000[a] rpm gearing (if multi-speed) and clockwise rotation (if bidirectional).
   • Start tractor engine and set throttle to idle.
   • Engage the PTO.
   • Bring the tractor engine and PTO up to intended field rpms.
5. Check for hydraulic fluid leaks.
6. Verify fluid level in tank (page 14).

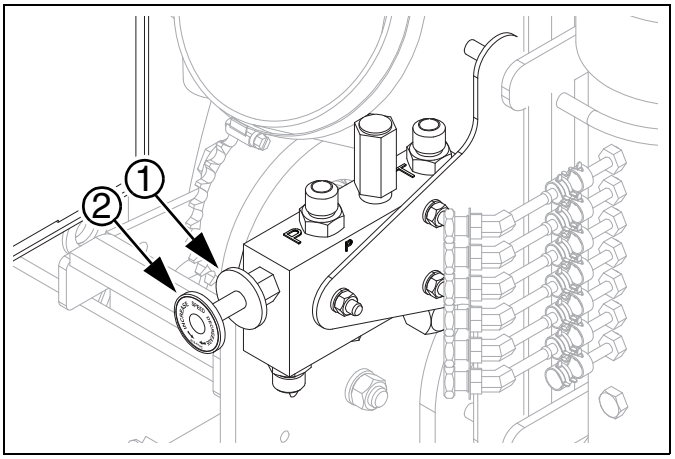

Figure 13: Flow Control Valve 34626A

DANGER

Entanglement and Crushing Hazard:
Use extreme caution in the hitch area when the PTO is operating.

WARNING

High Pressure Fluid Hazard:
Watch for signs of fluid leaks. Escaping fluid under pressure can have sufficient pressure to penetrate the skin causing serious injury. Use a piece of paper or cardboard, NOT BODY PARTS, to check for leaks. Wear protective gloves and safety glasses or goggles when working with hydraulic systems. If an accident occurs, seek immediate medical attention from a physician familiar with this type of injury.

a. Operate above 540 rpm only with a 1000 rpm pump.

About the Flow Control Valve

The flow control valve adjusts the percent of PTO pump output that is supplied to the planter hydraulic motors. The total pump flow, in gpm or liters/min, is also directly proportional to PTO shaft rpm.

Adjustment typically requires two persons. Pump oil flow is ideally adjusted with all motors active under simulated field workload, relying on Magnehelic® pressure gauge readout, and in some cases seed monitor rpm readout.

On Great Plains Yield-Pro® single section planters, the PTO pump supplies one or two hydraulic motors. The table below summarizes the motor count/use and readout resource available for the covered planters.

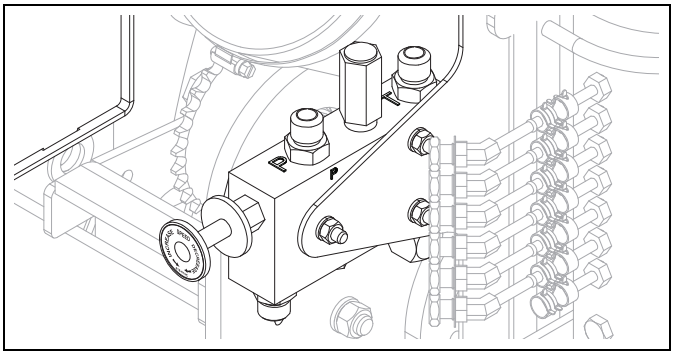

Figure 14: 34626A
Flow Control Valve (YP825A)

PTO Kit	Planter Model(s)	Seed Drive	First Motor	Second Motor	Fan Adjust	Valve Location
401-845A 411-163A	YP425A3P, YP625A3P, YP825A3P Narrow[a]	Ground	Meter Fan	-	in. H_2O	Fan mast
401-846A 411-164A	Seed-only YP425A, YP625A, YP825A	Ground	Meter Fan	-	in. H_2O	Fan mast
401-847A 411-165A	Dry fertilizer YP425A, YP625A, YP825A	Ground	Meter Fan	-	in. H_2O	Fan mast
401-848A 411-166A	Liquid fertilizer YP425A	Ground	Meter Fan	-	in. H_2O	Fan mast
401-849A 411-167A	Liquid fertilizer YP625A, YP825A	Ground	Meter Fan	-	in. H_2O	Fan mast
401-879A 411-168A	YP825A3P Wide[a]	Ground	Meter Fan	-	in. H_2O	Fan mast
411-016A	2025A, 2525A	Ground	Meter Fan	-	in. H_2O	Upper Frame Tube
411-035A 411-036A	YP825AR ground drive	Ground	Meter Fan	-	in. H_2O	Mainframe front
411-037A 411-038A	YP825AR hydraulic drive	Hydraulic	Meter Fan	Seed Drive	in. H_2O[b]	Mainframe front

a. See page 25 for detailed compatibility information.
b. Fan rpm is reported by the monitor console on this configuration, and can be used as a reference.

Setting Meter Pressurization

General Steps for all Kits

Refer to Figure 15

Meter pressurization is set as for a standard planter, using the PTO kit valve ① rather than a lever for a tractor hydraulic remote. This adjustment is normally made with the seed meters full of seed.

Consult your planter Seed Rate manual for the correct seed disk, meter inlet shutter setting, and recommended initial pressure as reported by the Magnehelic® gauge ②.

1. Check that the Inlet Butterfly valve handle ③ is set to 30·. If not, loosen the pivot bolt, reset handle, and Re-secure bolt.
2. Mount the PTO pump (page 11).
3. Shut off the tractor and remove the key.
4. Consult your planter Seed Rate manual for the intended crop, noting:
   • Range and Transmission sprockets required,
   • correct Air-Pro® seed disk (not shown),
   • initial inlet shutter setting (not shown), and
   • initial meter pressurization.
5. Install seed disks. Leave rain covers off meters.
6. Set meter inlet shutters per the Seed Rate manual.
7. Open any slide gates under hoppers.
8. Load enough seed to completely fill the meter inlet tubes, and at least partially fill every hopper.
9. Set out containers, under row unit seed tubes, to collect seed metered during setup.
10. Clear the hitch area of non-essential persons. Check essential personnel for long hair, scarves, cords, frays, loose flaps and anything else that might get entangled. Clear the area of dangling or loose wires, straps, cord and other lines that might become entangled and pull someone in.

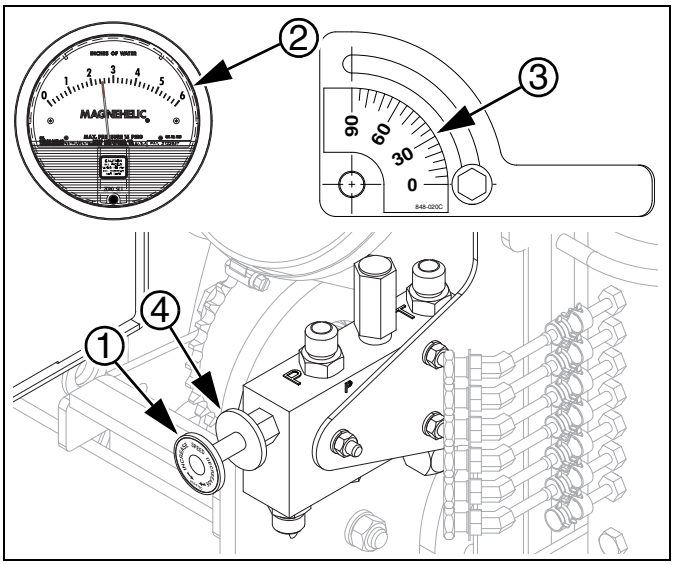

Figure 15: YP625A
Meter Pressure Adjustment

29842
25137
34626A

DANGER

Entanglement and Crushing Hazard:
Use extreme caution in the hitch area when the PTO is operating.

Ground Drive Meter Pressure

1. Configure the meter drive system sprockets for the rate desired (see Seed Rate Manual).
2. Per your planter Operator manual, hitch the planter. Raise the planter. Install lift locks. This is to free the meter ground drive wheel.
3. • Check that tractor is in Park or Neutral.
   • Check parking brake set.
   • Set the tractor PTO controls for 540 or 1000 rpm gearing (if multi-speed) and clockwise rotation (if bidirectional).
   • Start tractor engine and set throttle to idle.
   • Engage the PTO.
   • Bring the tractor engine and PTO up to intended field rpms.
4. At the flow control valve, turn the lock disc ④ counter-clockwise to release the knob ①. Slowly turn the knob counter-clockwise to start the fan. Bring the fan speed up until the Magnehelic® gauge displays the suggested pressure for this crop.
5. Turn the meter ground drive wheel forward several turns, until all exposed cells in all seed disks contain seed.
6. Recheck the Magnehelic® gauge ②. The reported pressure is likely to have increased. Adjust the flow control knob to bring the pressure reading back to the recommended value. Tighten the lock disc.
7. Shut down the PTO, and as desired, the tractor.
8. Install rain covers on seed meters.

The PTO pump is now ready for field work. Some adjustment of meter pressure and inlet shutters may be required, depending on seed and planting conditions. Use the flow control valve, and not the butterfly valve, to make pressure adjustments.

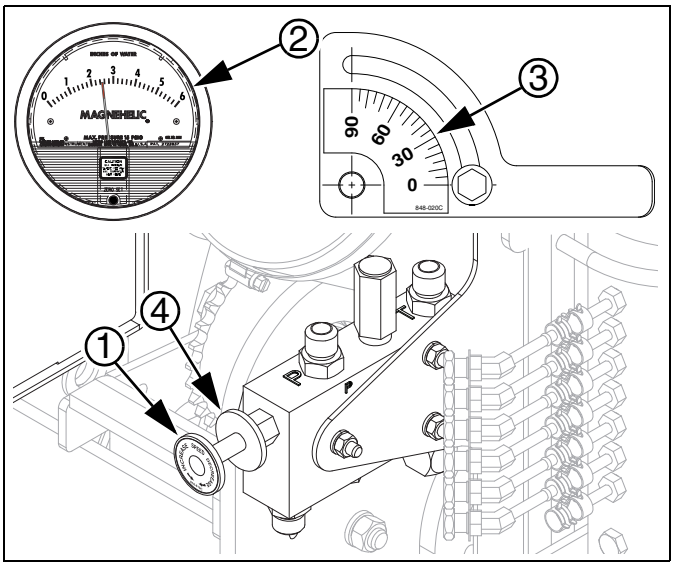

Figure 16: YP625A
Meter Pressure Adjustment

29842
25137
34626A

DANGER

Entanglement and Crushing Hazard:
Use extreme caution in the hitch area when the PTO is operating.

Hydraulic Drive Meter Pressure

On these models, the PTO system drives two motors, plumbed in parallel.

Adjustment Steps:

Refer to Figure 17

1. Have the DICKEY-john® Planter/Drill Control User Level 2&3 manual at hand. Making changes to the GROUND SPEED SETUP configuration requires the Level 2 password.
2. Have the Operator and Seed Rate manuals at hand, so that meter setting and fan rpm targets are known for the seed to be planted.
3. Turn the IntelliAg® monitor system on.
   Turn the Master switch off.
   On the console, navigate to the GROUND SPEED SETUP screen.
   Record the ground speed constant:

Source	Digital Freq.
Gspd Constant	12345 (actual value varies)

4. Set:

Source	Manual
Manual Gnd Spd	5.0 MPH (or as desired)
Implement Lift	Disabled

5. Hitch the tractor to be used, and install the PTO pump. Raise the planter. Unfold a YP825AR planter.
6. Turn the lock disc ④ counter-clockwise to release the knob ①. Turn the knob fully clockwise to shut off flow to the motors.
7. Start the tractor, and seed monitor. Bring the PTO up to expected field rpm (which is often not the full 1000 rpm).
8. Turn the IntelliAg® Master switch on to engage the hydraulic seed meter drive.
9. With one person observing the Magnehelic® pressure gauge[a], turn the knob ① counter-clockwise to obtain the pressure recommended for this planter configuration, crop, population and intended field speed.

   Secure the knob at this setting with the lock disc.
10. Shut down the PTO. Set Master switch off.

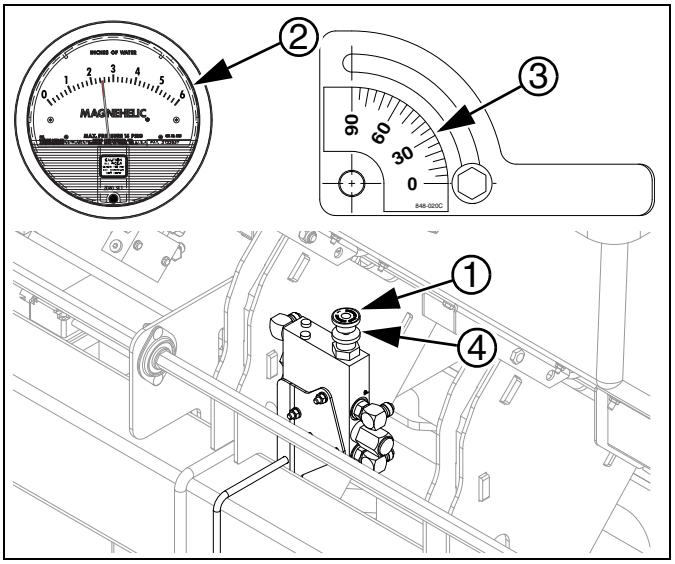

Figure 17: YP825AR Meter Pressure Adjustment

29842
25137
36291

DANGER

Entanglement and Crushing Hazard:

Use extreme caution in the hitch area when the PTO is operating.

11. On the console, navigate to the GROUND SPEED SETUP screen.
    Restore the original settings:

Source	Digital Freq.
Gspd Constant	12345 (actual value varies)
Implement Lift	Enabled

12. If the planter has hydraulic drive, engage it for a “FIVE REV TEST” or similar operation to create a hydraulic motor load. Adjust PTO oil flow for target fan speed plus 50 rpm.

Monitor meter pressurization when planting. If it is different than during flow setup, perform the setup steps again, and adjust the flow control valve for the recommended pressure.

a. The monitor console also reports fan rpm. If you make a note of the fan rpm at the recommended pressure, you can use the console to check air system status in the field.

PTO Unhitching

The pump may be dismounted before or after unhitching the planter and tractor. With a 3-point planter, dismounting the pump last may be easier, which is the order shown on this page. For safety, have the tractor completely shut down during PTO dismounting.

1. At the tractor, shut down the PTO.

NOTE:
The PTO may be shut down suddenly or gradually. The fan circuit includes a bypass to recirculate excess pressure during deceleration. The fan is only sensitive to sudden acceleration.

2. Do not approach the hitch area until the PTO shaft, and the fan, have slowed to a complete stop.
3. Mechanically unhitch the planter per the Operator manual. Leave the PTO pump mounted at this time.
4. Pull the tractor forward enough to allow access to the PTO pump. Put the tractor in Park or Neutral. Engage the parking brake. Shut the tractor down. Remove the key.

Dismount 540 rpm Pump

Refer to Figure 9 on page 12

5. Pass the free end of the pump chain forward through the torque arm keyhole.
6. Unwrap the chain from the anchor point and drawbar.
7. Slide the PTO pump off the PTO shaft. Store the pump on the planter. Use the chain to secure it to any available structure.

Dismount 1000 rpm Pump

Refer to Figure 18

5. Loosen and remove the socket head cap screws ① at the PTO coupler ②.
6. Slide the PTO pump off the PTO shaft.

   If, after removing the cap screws, the coupler is still grasping the PTO shaft too tightly to remove, use the drive-out holes ③ to pry the clamping halves apart. Insert the cap screws in the forward drive-out holes. Tighten them alternately until the coupler is free.

DANGER

Entanglement Hazard:
Remain clear of a rotating PTO shaft. Even when coasting to a stop, a PTO shaft can have enough residual torque to inflict serious or fatal injury.

CAUTION

Hot Surface Hazard:
Remain clear of the pump reservoir during unhitching. The oil may be hot enough to inflict a painful burn.

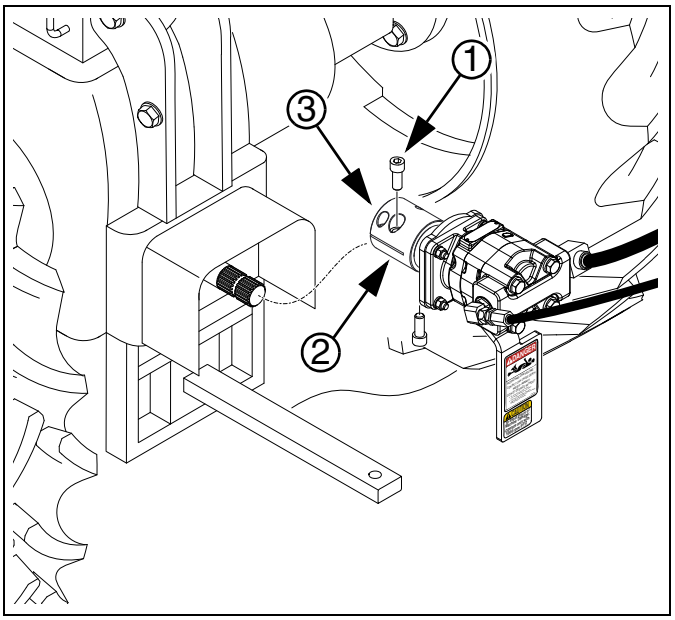

Figure 18: 36317
Dismount 1000 rpm PTO Pump

PTO Troubleshooting

Symptom	Cause	Remedy
Seed meter pressure too low	Flow control adjusted too low.	Increase flow control (page 17).
	Fan butterfly valve closed or set at too high an angle.	Reduce to 30· (page 17).
	PTO rpm too low.	Bring up PTO rpm, but do not exceed 540 rpm.
	Fan running in reverse (multiple possible causes).	See "**Fan running in reverse**" below.
	Pump cavitating.	Check oil level (page 14).
	No blank disks in unused seed meters.	Install blank disks to balance pressure.
	Seed inlet shutters open too wide.	Verify setting vs., rate charts. Adjust as need for actual seed pool.
	Oil filter clogged.	Replace oil filter and oil (page 22).
	Magnehelic® gauge disconnected or sample line(s) leaking.	Check air gauging system.
	Magnehelic® gauge uncalibrated.	Re-zero (see Operator manual).
	Flow control valve failure or malfunction.	Repair or replace valve.
	Fan seals damaged.	Repair or replace fan motor.
	PTO rotation and fan or valve hoses reversed (highly unlikely).	Set tractor controls for clockwise PTO. Reconnect hoses.
	Fan cooler plugged.	Clean or replace fan cooler.
Pressure correct on Magnehelic®, but skips or doubles	Pressure gauge disconnected or sample line(s) leaking.	Check air gauging system.
	Magnehelic® gauge uncalibrated.	Re-zero (see Operator manual).
	Seed variety may require adjustment.	Check all other possible pressure errors, then fine tune pressure for one seed per disk cell.
Oil overheating	Oil filter clogged.	Replace oil filter and oil (page 22).
	PTO rpm too high.	Adjust system for ideal pressure at lower PTO rpm.
	Fan butterfly valve angle too high.	Reduce to 30· (page 17).
Fan running in reverse	PTO shaft turning counter-clockwise.	Set tractor controls for clockwise PTO.
	Hoses reversed.	Check hose routing from pump to valve, to tank and fan per Parts manual.
Fan doesn't run at all	Low oil level in tank.	Top off tank. Check system for leaks.
	Flow control valve closed.	Adjust valve (page 17).
	Hoses misconnected.	Review installation (page 52).

PTO Maintenance

Oil and Filter Change

Oil Fill

Refer to Figure 19 and Figure 20

A dry or fully drained system may require as much as 6.5 gallons (25 liters) of oil to charge the cooler, pump, motor, hoses, filter and valve, and leave 5.5 gallons (21 liters) in the reservoir.

Before adding oil, check that the drain plug ① is secure, and that there are no signs of leaks in hoses or at any system fittings.

Oil Specification

10W-30 good quality mineral base hydraulic fluid, viscosity 70 to 250 SUS at 210°F (100°C).

Remove the filler cap ②. Add oil until the oil level in the tank, as observed on the sight gauge ③, reaches the fill line on the decal (the horizontal mid-border of the decal). The fill line is:
9.15 inches (23.2 cm)
above the tank bottom. If the 858-003C decal requires replacement, adjust the center border line to this height.

Operate the PTO system briefly, or until the tank level stops changing. See "**PTO Operation**" on page 8 for operations.

Recheck the sight gauge. As necessary, add oil to fill line.

Oil and Filter Change

At a regularly scheduled oil change, also change the filter. At initial system flush, no filter change is required.

Refer to Figure 19 and Figure 20

1. Wait for the oil to cool before changing the oil.
2. Place a container under the drain plug ① of the reservoir, with at least a capacity of:
   7 gallons (26 liters)
3. Carefully remove the drain plug.
4. Allow several minutes for oil in the filter to drain into and out of the reservoir. Change filter as required. See page 23 for filter size. Seat filter per instructions on filter.
5. Thread the plug back into the tank. Seating torque is 27 to 43 foot-pounds (37 to 58 N-m).

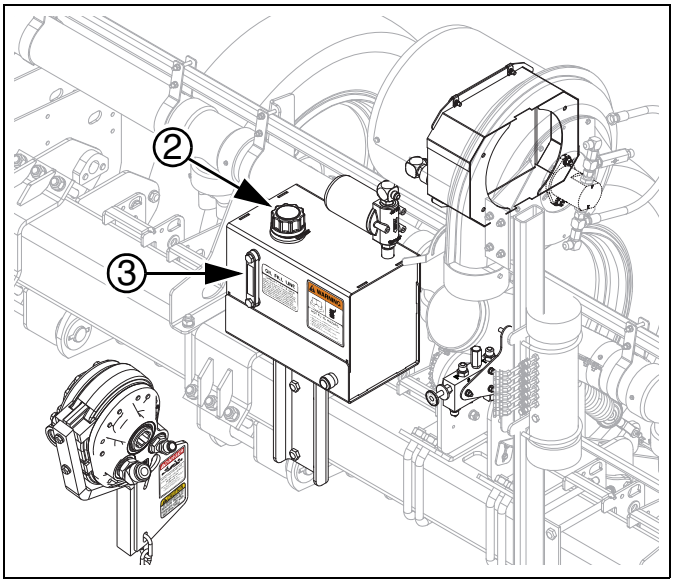

Figure 19:
Oil Filler Cap and Filter
34617A

⚠ WARNING

Hot Surface and Hot Fluid Hazards:
Assess the tank temperature before adjusting oil level. Draining excess hot oil could result in a severe burn. If the PTO has been operated recently, the oil temperature could be as high as 180°F (82°C).

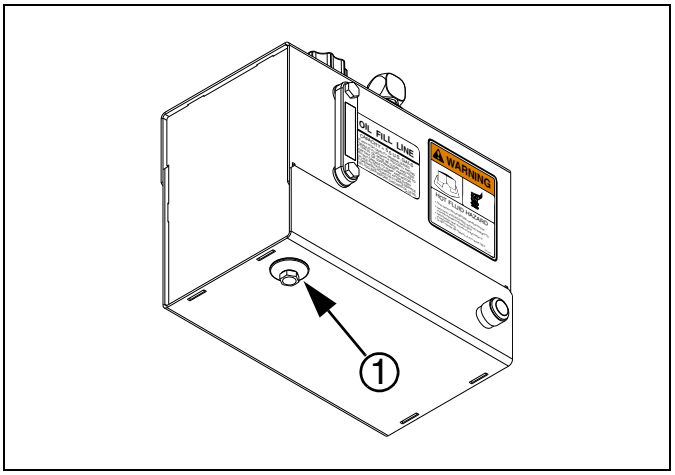

Figure 20:
Oil Drain Plug
34688

Lubrication and Scheduled Maintenance

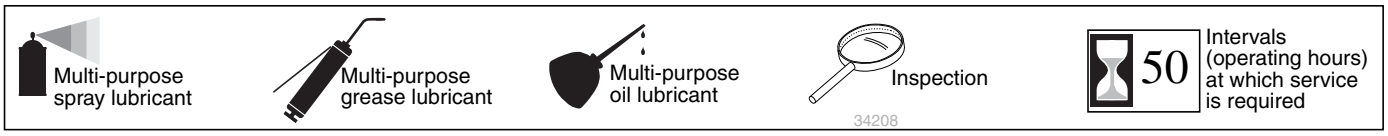

Oil Filter

1 filter per planter

Type: Great Plains 891-110C
Fleetguard HF6610
Pall HC 9540S UJ4H
Zinga HE-10

Change filter after first 25 hours, and then every 2 years or 150 hours.

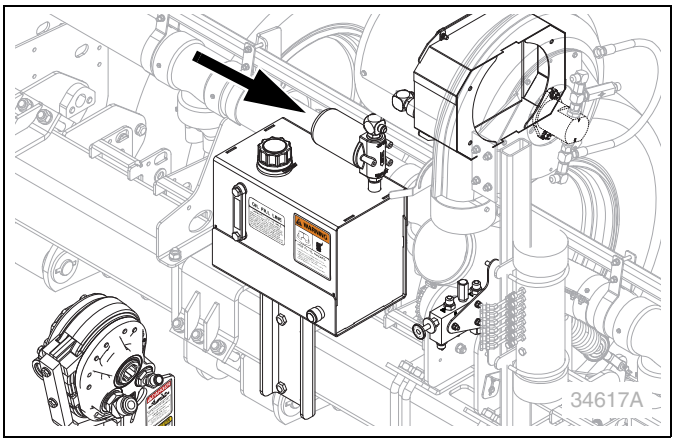

Pump/Fan Oil

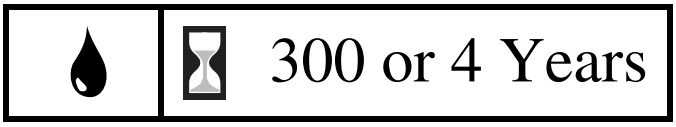

1 tank per planter

Type: 10W-30 Mineral-Based Oil
70 to 250 SUS at 210·F (100·C)

Quantity: 5.5 U.S. gallons (21 liters)

Change filter when changing oil, except at initial system flush.

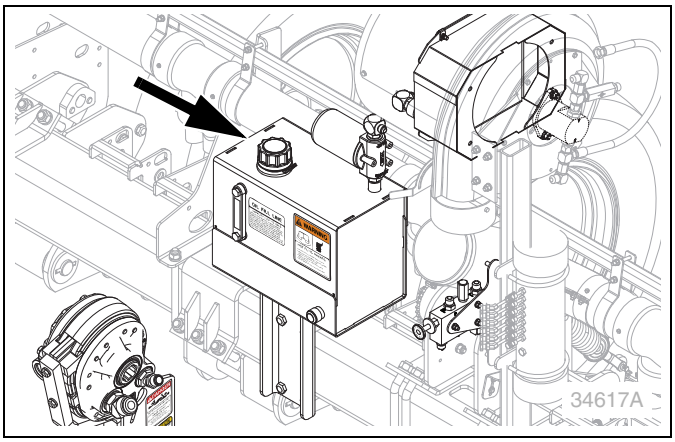

540 rpm Seal Kit

1 kit per planter

Type: Great Plains 810-904C
Prince PMCK-PTO-1A

Consult the **PTO Series Pump Parts Manual**, available from Prince Manufacturing Corp:
www.princehyd.com

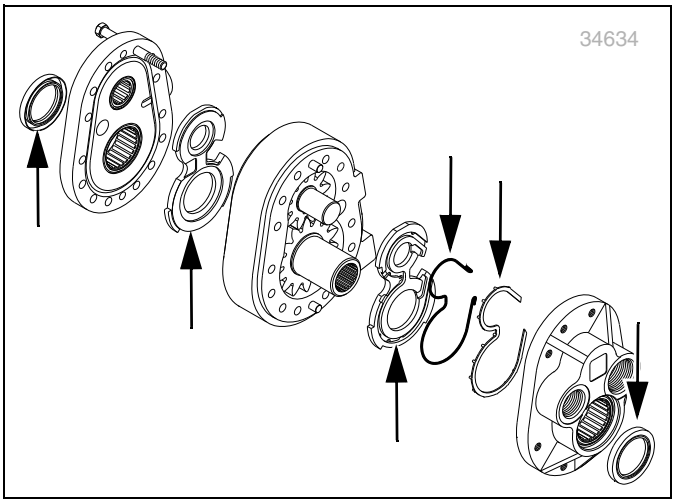

1000 rpm Seal Kit

600 or as needed

1 kit per planter, includes snap ring and all seals

Type: 810-901C for Parker 350C pumps

Consult the
Service Manual
PGP/PGM315, 330, 350, 365
HY09-SM300/US,
available from Parker Hannifin Corporation:
www.parker.com

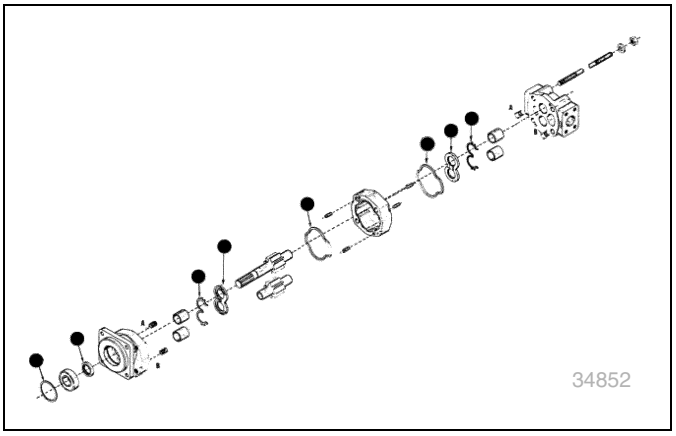

Appendix A - Installation

Before You Start

Most accidents are the result of negligence and carelessness, usually caused by failure of the installer to follow simple but necessary safety precautions. Allow no one to install the Air-Pro® PTO pump before carefully reading this manual.

Fasteners may be loosely assembled. Remove them before mounting the component. Due to evolving manufacturing practices, sub-assemblies may already be completely pre-assembled. If so, check that fasteners are tight, and skip the unneeded assembly steps.

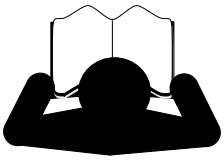

Compatible Planters

One PTO pump kit is always required. Older planters may also require a fan update kit. Each kit updates one planter.

Fan Motor Compatibility

The YP425/625/825A/3P Single-Section PTO Pumps kits require a 2-port fan hydraulic motor (having no case drain). Older planters, having 3-port fan hydraulic motors (with a case drain) cannot install a PTO kit unless the fan is updated.

Check the planter serial number, or inspect the fan. Planters manufactured with 3-port fans are:

Planter Model	Serial Number or Lower
2025A	(fan update never required)[a]
2525A	(fan update never required)[a]
YP425A	B1008N
YP425A3P	B1004M
YP625A	B1043Q
YP625A3P	B1006P
YP825A	B1014S
YP825A3P	B1007R
YP825AR	(fan update never required)

a. PTO kit for this model is compatible with a 3-port fan.

If the planter has a 3-port/case-drain fan motor, order one fan update kit:

Kit	Part Number
YP4,6,8 FAN UPDATE	401-956A

Instructions for installing this kit are merged with the instructions for the Single-Section PTO Pumps kits.

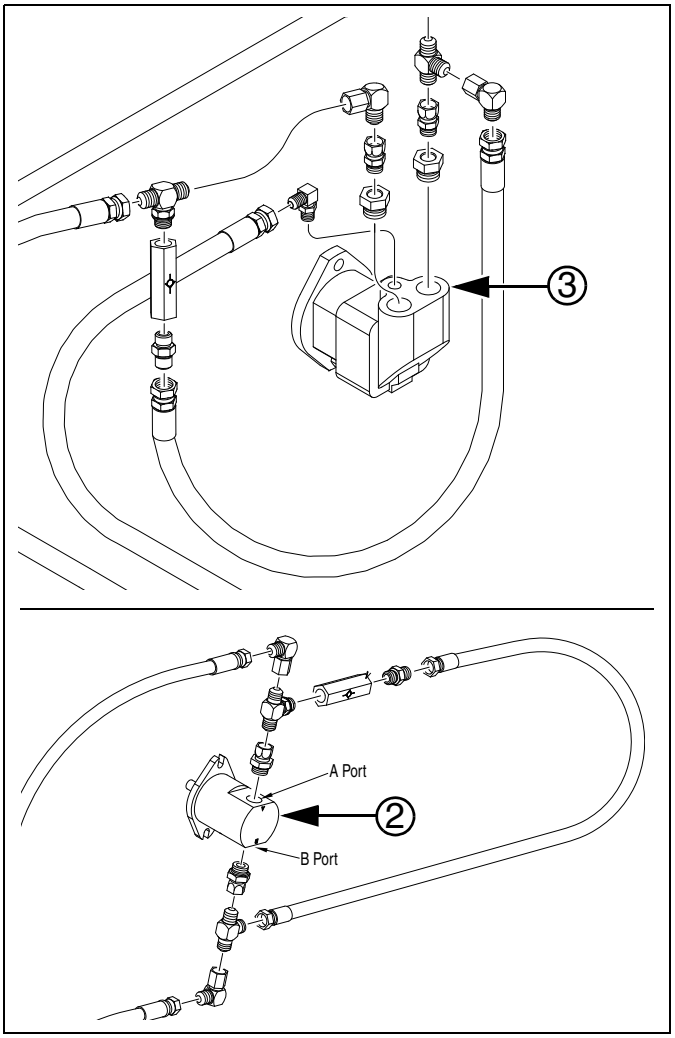

Figure 21:
Top: Older 3-Port Fan Motor
Bottom: Current 2-Port Motor

29781
31754

Configuration Compatibility

Refer to Figure 22 to distinguish between the liquid and dry fertilizer options.

Before installing any kit, inspect the planter configuration and serial number plate (for precise model number). Refer to the Operator manual for plate location.

2025A/2525A Compatible Kits

Air-Pro® Precision Drills	PTO Pump Kit	
	540 rpm	1000 rpm
2025A	n/a	411-016A
2525A	n/a	411-016A

YP425A Compatible Kits

YP425A Planters	PTO Pump Kit	
	540 rpm	1000 rpm
YP425A (PT) Dry Fertilizer s/n B1005M+	401-847A	411-165A
YP425A (PT) Liquid Fertilizer	401-848A	411-166A
YP425A (PT) without Fertilizer	401-846A	411-164A
YP425A3P	401-845A	411-163A

YP625A Compatible Kits

YP625A Planters	PTO Pump Kit	
	540 rpm	1000 rpm
YP625A (PT) Dry Fertilizer	401-847A	411-165A
YP625A (PT) Liquid Fertilizer	401-849A	411-167A
YP625A (PT) without Fertilizer	401-846A	411-164A
YP625A3P	401-845A	411-163A

YP825A/AR Compatible Kits

YP825A Planters	PTO Pump Kit	
	540 rpm	1000 rpm
YP825A (PT) Dry Fertilizer	401-847A	411-165A
YP825A (PT) Liquid Fertilizer	401-849A	411-167A
YP825A (PT) without Fertilizer	401-846A	411-164A
YP825A3P, row spacings: 30 inch (76.2 cm) or less 36 inch (91.4 cm) or more	 401-845A 401-879A	 411-163A 411-168A
YP825AR ground drive	411-035A	411-036A
YP825AR hydraulic drive	411-037A	411-038A

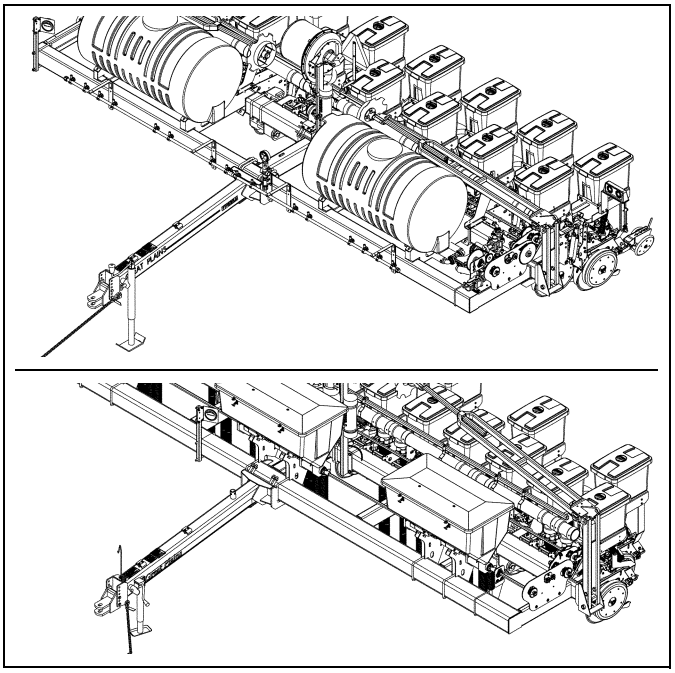

Figure 22:
Top: Liquid Fertilizer Planter
Bottom: Dry Fertilizer Planter

29909
31794

Other Single-Section Air-Pro® Implements

Planter Model	PTO Pump Kit
YP625PD	n/a
YP625TD	n/a
YP925TD	n/a
YPE-825A	n/a

Tools Required

- a lift or hoist with a 100 pound \ 45 kg capacity (600 pound \ 272 kg capacity for kits 401-845A, 401-847A, 401-847A and 401-848A)
- basic hand tools
- 6 to 12 gallons of good quality 10-W30 mineral base hydraulic fluid, viscosity from 70-250 SUS range at 210°F (100°C).
- bucket for collecting oil
- hose marker, such as white electrical tape and indelible marker
- power equipment with a compatible PTO for flushing and charging the system
- the planter Operator and Parts manuals (see page 6)
- protective footwear if the planter has coulters or row cleaners installed

Torque values for fasteners are shown on page 63.

Call-Outs

① to ⑨ and ⓐ to ⓩ	Single-character callouts identify components in the currently referenced Figure or Figures. Numbers and letters may be reused for different items on other pages.
11 to 53	Two-digit callouts in the range 11 to 53 reference existing parts removed and reused. They are listed on page 68.
101 to 241	Three-digit callouts in the range 101 to 241 reference new parts from the new parts list beginning on page 66. The descriptions match those on the parts, cartons, bags or item tags, as well as descriptions your updated Parts Manual.

Pre-Delivery and Other Options

If you are installing the Air-Pro® PTO Pump on a newly-shipped planter, it may be more convenient to install the PTO pump system during the pre-delivery setup:

- Install the PTO pump system *after* installing the tongue (pull-type only). The tongue must be in place for hose re-routing.
- Install the PTO pump system *after* mounting a fertilizer sub-frame (option, pull-type only). This sub-frame must be in place for flow control valve mounting, and in some cases, reservoir mounting.
- Install the PTO pump system *before* installing frame-mounted row options. This improves foot room and reduces sharp object hazards while working near tool bars.
- Install the PTO pump system *before* installing row-mounted coulters or row cleaners. This improves foot room and reduces sharp object hazards while working near tool bars.
- Install the PTO pump system *before* installing markers. This eliminates an overhead sharp object hazard, and improves working space at the mainframe.

Prepare Planter

1. Read and understand "**Important Safety Information**" starting on page 1.
2. Position the planter on a level surface in a well lighted location suitable for the installation. A clear surface beneath makes it easier to recover any dropped parts. If markers are already installed, choose an area with enough room to unfold them.
3. Configure the planter for Parking, as instructed in the planter Operator manual.
4. If markers are already installed, unfold them.
5. Unhitch the planter.

Prepare Fan

Disconnect Existing Fan Hoses

Newer fans have 2 hoses to the hitch. Older fans have 3 hoses to the hitch (and require a fan update kit). For a 3-port fan, continue at "**Disconnect 3-Port Fan**" on page 29.

Disconnect 2-Port Fan

A 2-port fan will be reconnected at a later step.

Refer to Figure 23

6. Set out an oil collection bucket near the hitch ends of the hoses.
7. Remove any hose handle housings ①.
8. Disconnect the hoses from the hitch fittings at the JIC connectors ②. Drain the hitch ends into the bucket. Set the open hose ends in the bucket.
9. Crack the JIC connections ③ at the upper ends of the supply, return and any case drain hoses at the fan. Leave the bypass hose ④ connected at the check valve.
10. When all hoses have completely drained, fully disconnect them from the fan fittings.
11. For all models except YP825AR, release the hoses from all clamps on their route. These clamps may be reused for PTO system hoses.

    For model YP825AR, leave the hoses on the mainframe in place for the time being. Release and remove fan hoses, and if present, seed meter hydraulic drive hoses, from the hitch to the first connection at the mainframe pivot.

🕮 **NOTE:**
For a PTO pump installation, removed fan hoses, their fittings and handles are not reused.

Continue at "**Open Fan Screen**" on page 29.

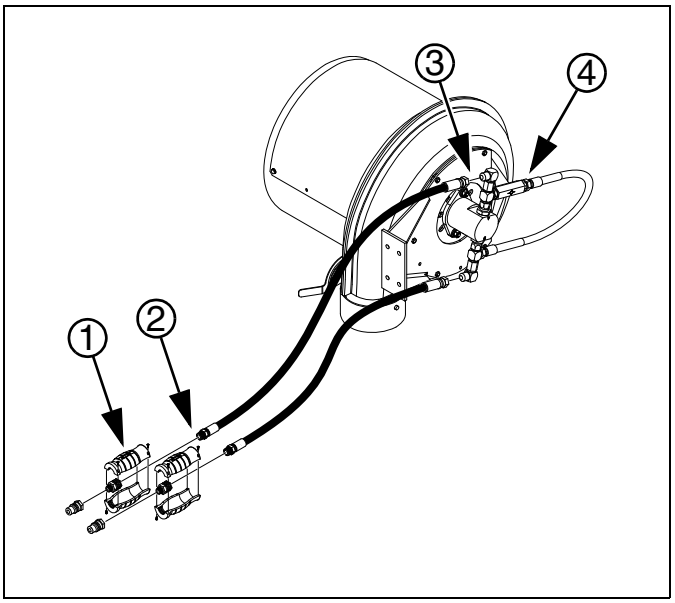

Figure 23:
2-Port Fan Hoses

34676

Disconnect 3-Port Fan

For a 2-port fan, follow steps at "**Disconnect 2-Port Fan**" on page 28.

A 3-port fan is replaced with a 401-956A at a later step.

Refer to Figure 23 on page 28 and Figure 24

12. Set out an oil collection bucket near the hitch ends of the hoses.
13. Remove any hose handle housings ①.
14. Disconnect the hoses from the hitch fittings at the JIC connectors ②. Drain the QD ends into the bucket. Set the open hose ends in the bucket.
15. If not installing a PTO kit, mark hoses at the pump. Mark the hose at port ⓐ as "A", and the hose at ⓑ as "B". No mark is required for the case drain ⓒ.
16. Crack the JIC connections ③ at the upper ends of the hoses at the fan. When all hoses have completely drained, fully disconnect them from the fan fittings.
17. If also installing a PTO pump: release the hoses from all clamps on their route. These clamps may be reused for PTO system hoses.

    If not installing a PTO pump: release only the case drain hose from clamps.

🕮 **NOTE:**
For a PTO pump installation, the original fan hoses, their fittings and handles are not reused.

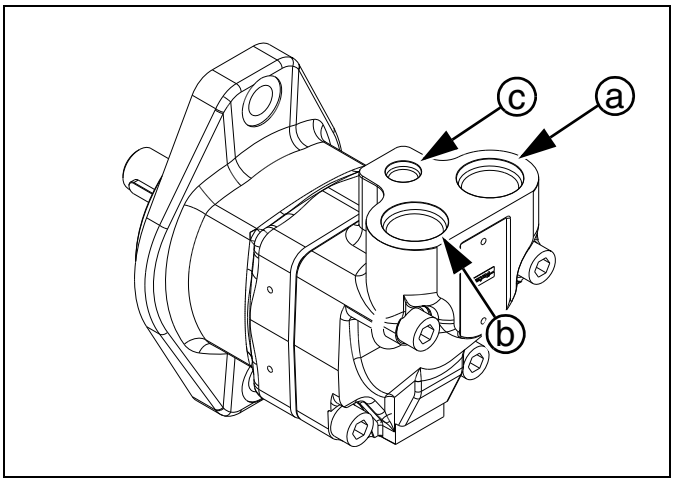

Figure 24: 34689
3-Port Fan Motor

Open Fan Screen

Refer to Figure 25

18. Remove and save four sheet metal screws ⑤ and one:
    51e 890-624C SCREEN FAN COVER

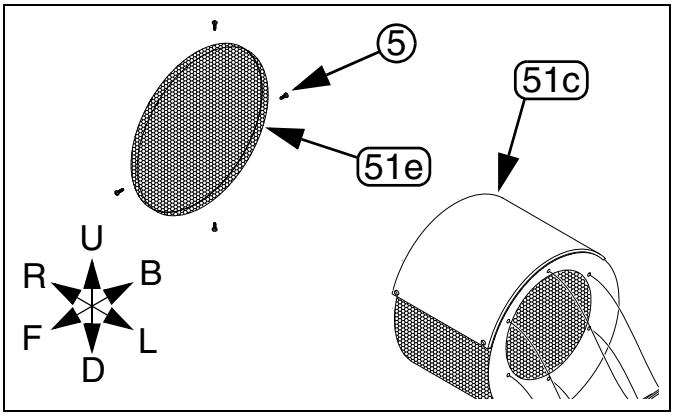

Figure 25: 34631
Open Fan Screen

Dismount or Relocate Sensor Bracket

Refer to Figure 26

19. Inspect the fan cage for presence of a:
    ⑰ 401-537D DJ FAN SENSOR MOUNT BRKT
    If there is no sensor bracket, or the bracket is installed in the top and bottom holes ⓐ, skip to step 22. The bracket may or may not have a sensor installed.
20. This step presumes that there is a sensor bracket ⑰, and it is mounted in one of the lateral holes sets ⓑ. Remove and save two sets of fasteners securing the bracket, and two sets at the top and bottom holes ⓐ, four sets total:
    ㉑ 802-005C HHCS 1/4-20X1 GR5
    ㉘ 804-006C WASHER LOCK SPRING 1/4 PLT
    ㉛ 804-075C WASHER FLAT 1/4 USS PLT
    If also performing a fan motor update, skip to step 22 (do not relocate sensor at this time).
21. If the fan already has a 2-port hydraulic motor (no fan update being performed), relocate the sensor bracket ⑰ to a vertical orientation, using hole set ⓐ. Secure it with two sets of saved fasteners.
22. Remove and save two or four sets of fasteners at lateral holes ⓑ:
    ㉑ 802-005C HHCS 1/4-20X1 GR5
    ㉘ 804-006C WASHER LOCK SPRING 1/4 PLT
    ㉛ 804-075C WASHER FLAT 1/4 USS PLT
    If performing a fan motor update, the screen cage is completely loose at this point. Remove and save it.

If not installing a 401-956A fan motor update, continue at "**Install Fan Cooler**" on page 37.

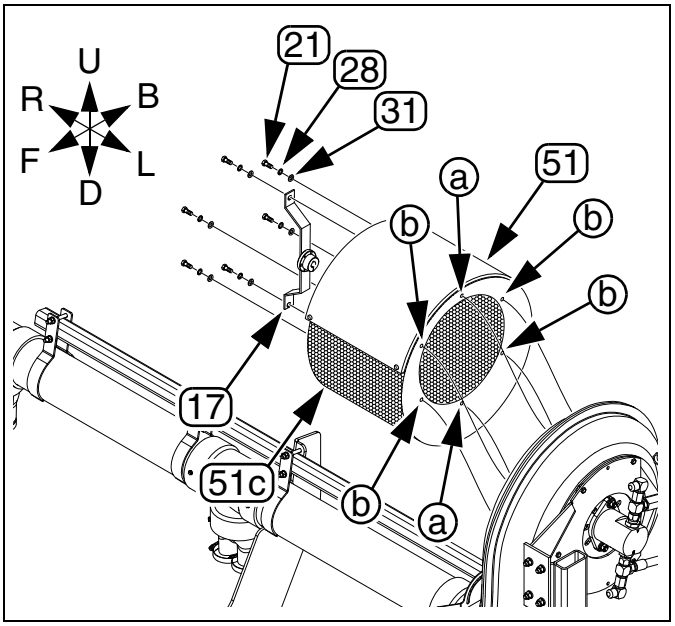

Figure 26: Prepare Fan Cage 34631

Update Fan Motor

If not installing a 401-956A fan motor update, continue at "**Install Fan Cooler**" on page 37.

Recover Motor Fittings

Refer to Figure 27

📖 **NOTE:**
The recirculation loop hose (47) is likely to be full of oil. Have the oil collection bucket and a rag at hand. Disconnect the higher of the two JIC connections first.

23. Remove and save one each:
    (37) 811-088C AD 3/4MORB 3/4MJIC
    (32) 810-037C VALVE LINE CHECK
    (34) 811-077C TE 3/4MORB 3/4MJIC 3/4MJIC
    (35) 811-078C TE 3/4MJIC
    (47) 841-196C HH1/2R2 024 3/4FJIC
    and two:
    (39) 811-150C EL 3/4FJIC 3/4MJIC
    The remaining fittings are not re-used.

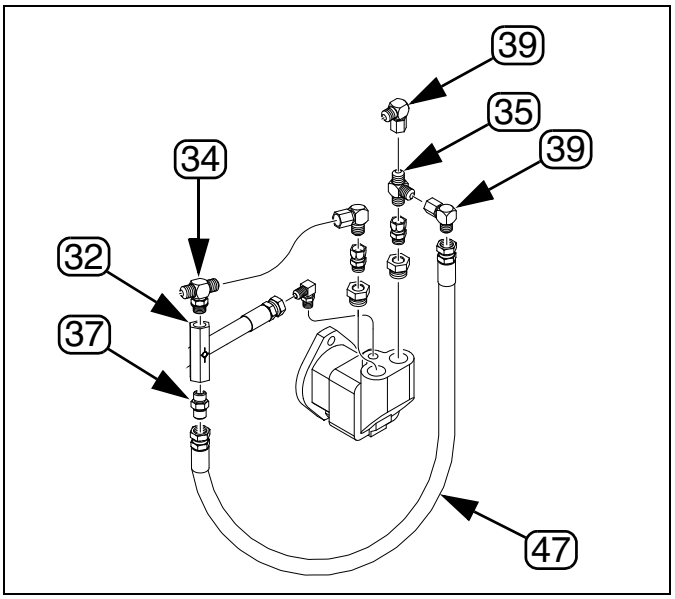

Figure 27: Recover Fittings 34631

Release Impeller

If not installing a 401-956A fan motor update, continue at "**Install Fan Cooler**" on page 37.

Refer to Figure 28

24. Locate the impeller hub bushing:
    (52) 890-891C BUSHING, JA X 20 MM
    inside the fan housing. Remove three:
    (11) HHCS #10-24x1 INCH GRADE 8 FULL THREAD

25. Thread the cap screws (11) into the threaded holes ① in the bushing (52). Screw them in until they contact the impeller. Drive them one turn at a time, in a rotating pattern, until the bushing is free. Recover and save the bushing, screws and one:
    (19) 800-373C SQ KEY 6MM X 35MM
    The impeller may now be loose inside the fan housing.

    The bushing and screws are not reused.

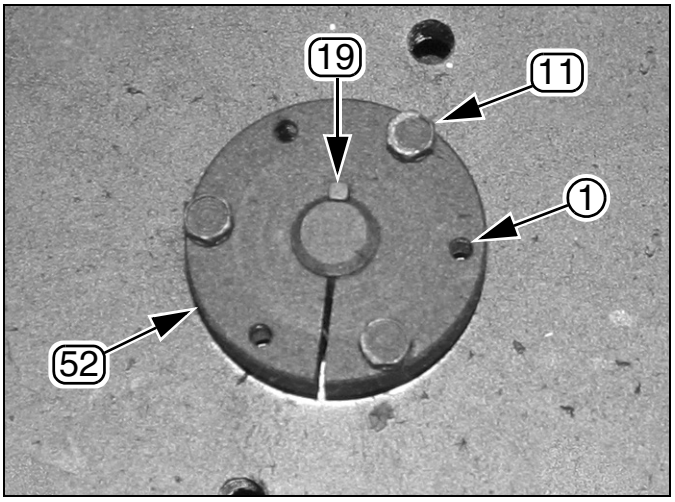

Figure 28: Fan Impeller Hub Bushing 34683

Dismount Fan

If not installing a 401-956A fan motor update, continue at "**Install Fan Cooler**" on page 37.

Refer to Figure 29

26. Disconnect the duct hose at the outlet ② (duct not shown).
27. At the mount plate ⑤③, remove and save one:
    ⑳ 801-081C SCREW HEX SELF TAP 1/4-20X3/4
28. Prepare to support the weight of the fan assembly, which may be as much as 70 pounds (32 kg).
29. At the fan mount weldment ⑯, starting at the bottom, remove and save five:
    ㉘ 804-006C WASHER LOCK SPRING 1/4 PLT
    ㉔ 802-224C HHCS 1/4-20X1 1/4 GR5

    The fan/motor assembly is now loose. Move it to a workbench or similar flat surface, with the fan inlet facing down.

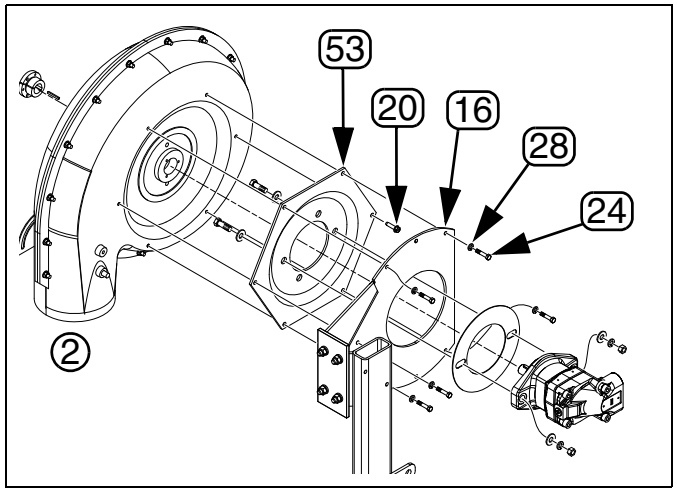

Figure 29: Dismount Fan 34681

Remove 3-Port Hydraulic Motor

If not installing a 401-956A fan motor update, continue at "**Install Fan Cooler**" on page 37.

Refer to Figure 30

30. Remove and save two:
    ㉕ 803-014C NUT HEX 3/8-16 PLT
    ㉚ 804-013C WASHER LOCK SPRING 3/8 PLT
    four:
    ㉙ 804-011C WASHER FLAT 3/8 USS PLT
    two:
    ㉒ 802-079C HHCS 3/8-16X1 1/4 GR5
    The following items are not reused:
    ⑤③ 890-899C VOLVO HYD MOTOR MOUNT PLT
    ⑮ 23907 HUB/MOTOR PLATE SEAL (2B)
    ㉝ 810-556C PARKER F-11 FAN MOTOR

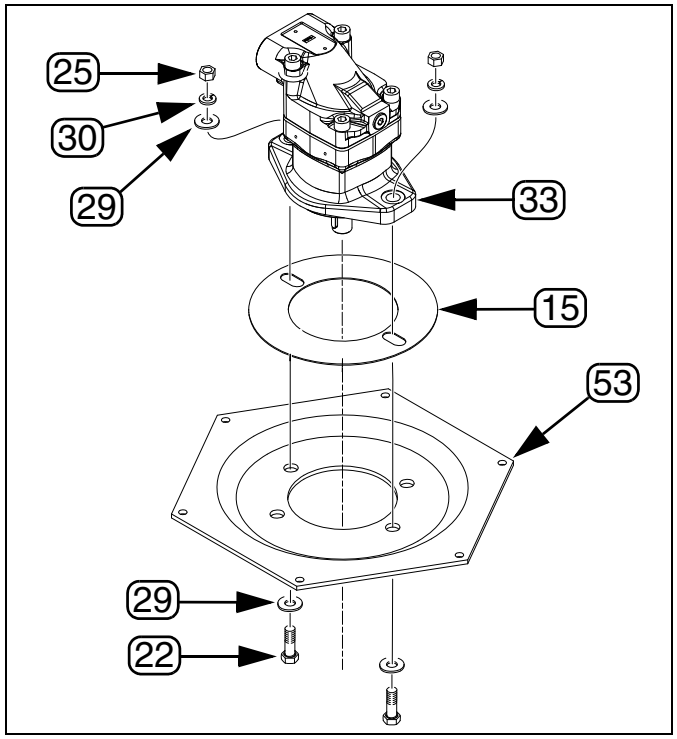

Figure 30: Remove 3-Port Motor 34680

Mount 2-Port Hydraulic Motor

If not installing a 401-956A fan motor update, continue at "**Install Fan Cooler**" on page 37.

Refer to Figure 31

31. Select one each new:
    (235) 890-892C HYDRAULIC MOTOR MOUNT PLT
    Set this on the work surface with the raised rim up. Note that there are 8 holes. Motor installation uses the 2 holes that are aligned with midpoints of the six edges (shown as dashed arrows). Do not use holes aligned with corners, or (if present) circular holes.
32. Select two sets:
    (22) 802-079C HHCS 3/8-16X1 1/4 GR5
    (29) 804-011C WASHER FLAT 3/8 USS PLT
    Place a flat washer (29) on each bolt (22). Insert these, from below, through the two edge-centered slotted holes.
33. Select one new:
    (180) 810-273C HYD MOTOR 7/8ORBF
    Orient the new motor (180), shaft down, to mate with the bolts positioned at step 32.
34. Select two each saved
    (29) 804-011C WASHER FLAT 3/8 USS PLT
    (30) 804-013C WASHER LOCK SPRING 3/8 PLT
    (25) 803-014C NUT HEX 3/8-16 PLT

    Secure the motor (180), centered on the plate (235), using flat washers (29), lock washers (30) and nuts (25) on the bolts from step 32.

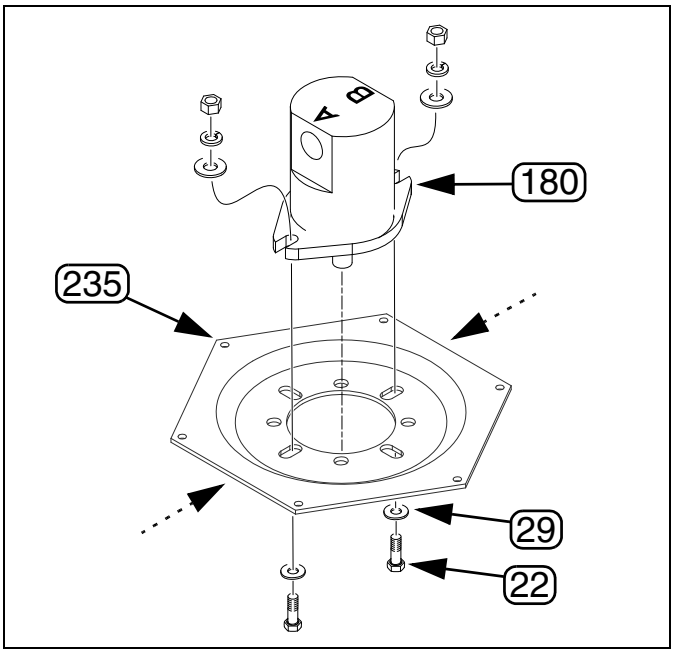

Figure 31: Mount 2-Port Motor 34678

Re-Mount Fan

If not installing a 401-956A fan motor update, continue at "**Install Fan Cooler**" on page 37.

Refer to Figure 38

35. Place the mount plate (235) and motor assembly on the LH fan housing (14). Align the plate so that motor Port A is toward fan top, and Port B is toward fan bottom (direction of fan exhaust port).
36. Select one saved:
    (20) 801-081C SCREW HEX SELF TAP 1/4-20X3/4
    Secure the back corner of the plate to the fan housing with this screw.
37. Select five sets saved:
    (28) 804-006C WASHER LOCK SPRING 1/4 PLT
    (24) 802-224C HHCS 1/4-20X1 1/4 GR5
    Support the weight of the fan/motor assembly at the mast mount weldment (16). With the fan exhaust pointing down, secure the assembly to the mount with the bolts and lock washers.
38. Reconnect the duct hose at the outlet ② (duct not shown).

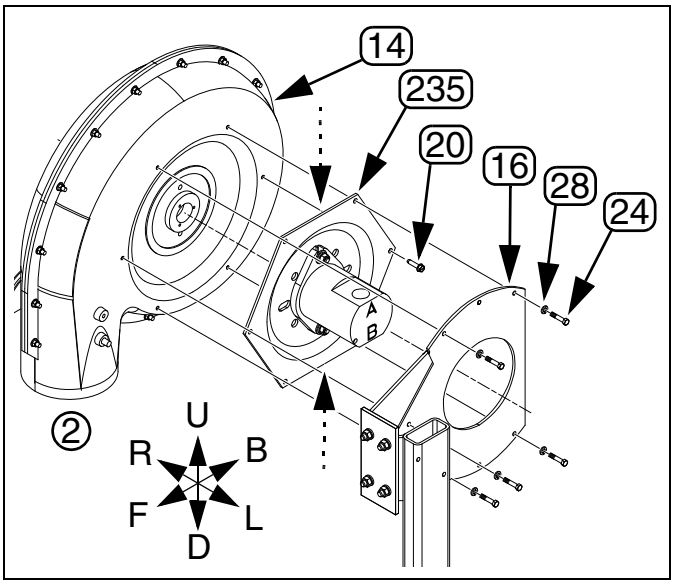

Figure 32: Mount 2-Port Motor 34679

Install New Impeller Bushing

If not installing a 401-956A fan motor update, continue at "**Install Fan Cooler**" on page 37.

Refer to Figure 33 (shown with fan RH housing transparent)

39. Select one new:
    (234) 890-396C BUSHING - FAN
    The bushing (234) includes three screws:
    (242) HHCS #10-24x1 INCH GRADE 8 FULL THREAD
    These screws may be loose in a package, or may be threaded into the drive-out holes of the bushing. If threaded, remove them.
40. Make sure the surfaces of the bushing cone, impeller central hole and impeller threaded holes are free of any anti-seize compounds or other lubricants.
41. Select one new:
    (120) 168-094D HYD MOTOR 1/8 KEY
    Place the impeller (12) onto the motor shaft (180). Place the cone end of the bushing (234) onto the motor shaft. Rotate the bushing until the bushing keyway and the motor shaft keyway align. Insert the key (120), making the outside end flush with the bushing face.

Refer to Figure 34

42. Press the bushing (234) firmly into the impeller. Check that the gap ③ between the bushing flange and the impeller face is equal around the edge of the bushing.

NOTICE

Equipment Failure Risk:
Mind the gap ③. The flange to impeller face gap must not be closed at any point, and must be as consistent as practical to ensure proper key capture and minimize impeller run-out during operation.

43. Place the three screws (242) into the drilled (clearance) holes of the bushing. Thread them into the tapped holes of the impeller, until the screw heads just make contact with the bushing.
44. Using a small hand wrench, tighten the screw nearest the key to just hand tight.
45. Tighten the remaining two screws alternately to hand tight.
46. Using a torque wrench, tighten all three screws, in sequence, one full rotation per screw, until the specified torque is reached:
    60 inch-pounds (5 foot-pounds, 6.7 N-m)
47. Check that the impeller spins freely and without excessive run-out. If not, re-adjust seating screws and re-tighten to torque spec.

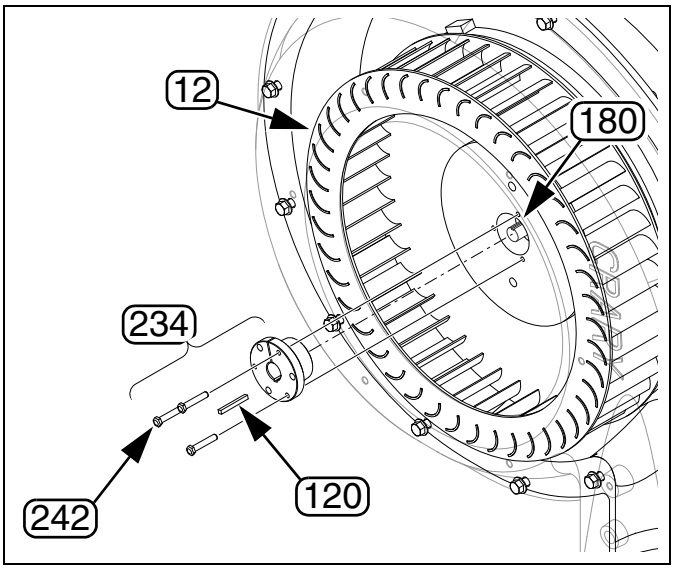

Figure 33: 34686
Install New Bushing

NOTICE

Equipment Failure Risk:
Do not lose these screws (242). If any need replacement, use Grade 8 or higher strength, rated for 60 inch-pounds torque. Using weaker screws has a high risk of impeller separation during operation, substantial equipment damage, and some risk of personal injury.

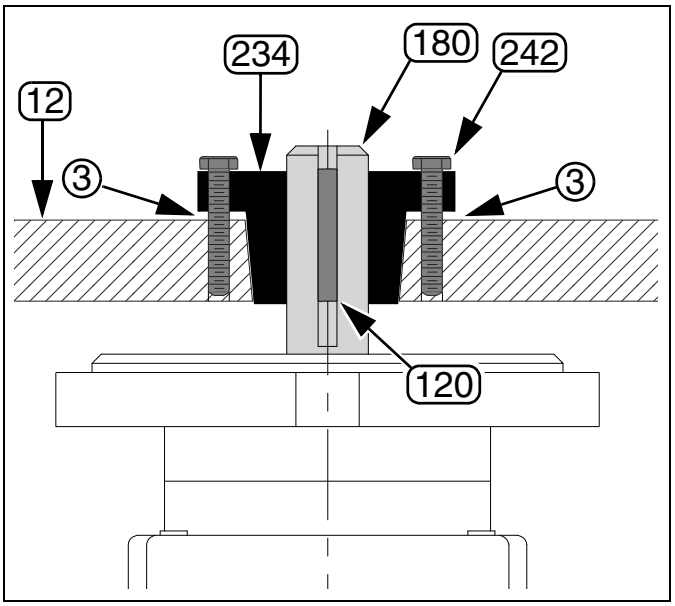

Figure 34: 34687
Seat Bushing Screws

Install Motor Fittings and Loop

If not installing a 401-956A fan motor update, continue at "**Install Fan Cooler**" on page 37.

Refer to Figure 35

48. Select two new:
    (199) 811-502C AD 7/8MORB 3/4FJIC
    Install these in the motor (180) ports.
49. Select one saved:
    (34) 811-077C TE 3/4MORB 3/4MJIC 3/4MJIC
    Install it at the Port A adaptor just installed, with the MORB port facing to the back of the planter.
50. Select one saved:
    (35) 811-078C TE 3/4MJIC
    Install it at the Port B adaptor, with the MORB port facing to the back of the planter.
51. Select two saved:
    (39) 811-150C EL 3/4FJIC 3/4MJIC
    Install these at both tees just installed, with the JIV ends facing to planter front.
52. Select one saved:
    (32) 810-037C VALVE LINE CHECK
    With the flow direction indicator oriented as shown, attach the check valve to the MORB port of the top tee (34). This valve allows flow from the top tee (motor outlet) to the bottom tee (motor inlet) when the impeller is spinning to a stop after hydraulic flow is stopped from the tractor or PTO pump.
53. Select one saved:
    (37) 811-088C AD 3/4MORB 3/4MJIC
    Connect it to the back end of the check valve (32).
54. Select one saved:
    (47) 841-196C HH1/2R2 024 3/4FJIC
    Connect it from the lower tee (39) to the top tee (34).

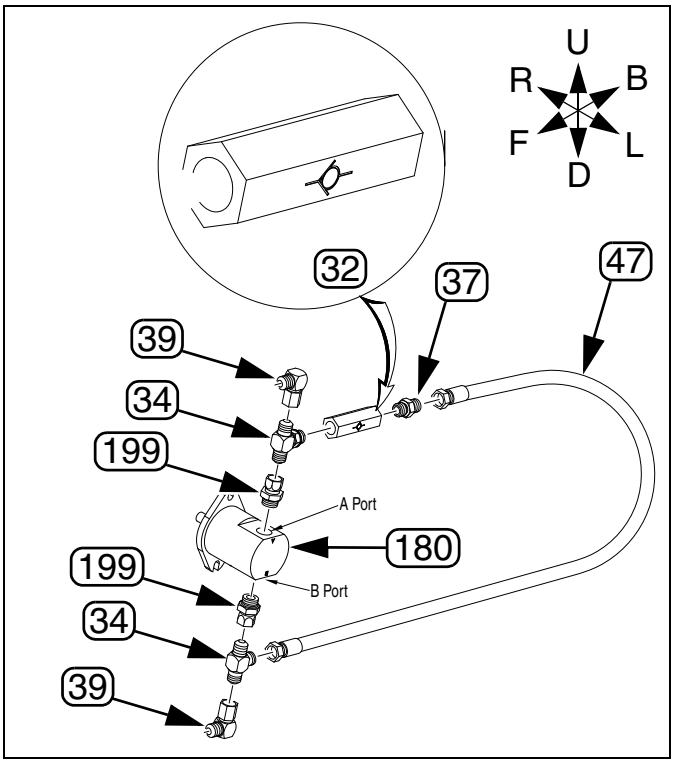

Figure 35: 2-Port Pump Fittings 31754

Re-Mount Fan Inlet Screen

If not installing a 401-956A fan motor update, continue at "**Install Fan Cooler**" on page 37.

Refer to Figure 36

55. Select one saved:
    (51c) 890-624C SCREEN FAN COVER
    and four sets saved (or six if no sensor bracket (17)):
    (21) 802-005C HHCS 1/4-20X1 GR5
    (28) 804-006C WASHER LOCK SPRING 1/4 PLT
    (31) 804-075C WASHER FLAT 1/4 USS PLT
    Orient the screen cage with the rain shield (44) on top. Secure it to the fan housing, at the lateral holes (b), using bolts (21), lock washers (28) and flat washers (31). if no sensor bracket (17), use all six holes (sets (a) and (b)).

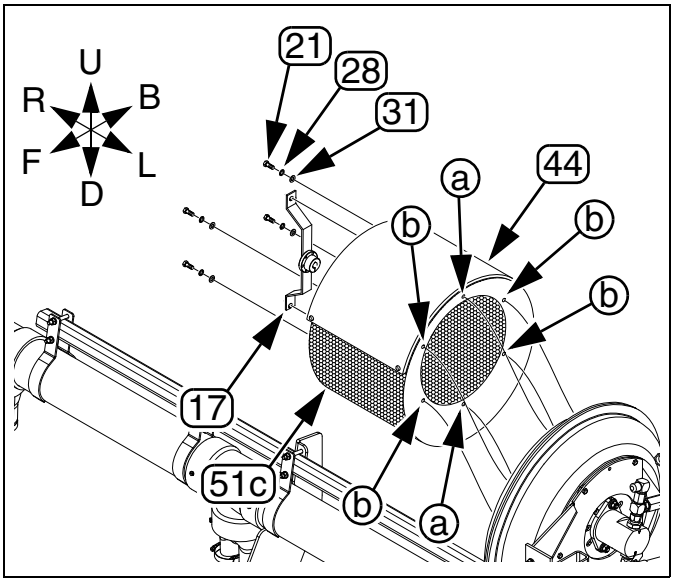

Figure 36: Re-Mount Fan Screen 34631

Re-Install RPM Sensor Bracket

If there is no sensor bracket, or if not installing a 401-956A fan motor update, continue at "**Install Fan Cooler**" on page 37.

Refer to Figure 37

56. Select one saved:
    17 401-537D DJ FAN SENSOR MOUNT BRKT
    and two sets saved:
    21 802-005C HHCS 1/4-20X1 GR5
    28 804-006C WASHER LOCK SPRING 1/4 PLT
    31 804-075C WASHER FLAT 1/4 USS PLT
    With the bend in the bracket 17 toward the impeller bushing, install the bracket at the top and bottom holes ⓐ, using the bolts 21, lock washers 28 and flat washers 31.

    Route any sensor lead present out the previously existing hole in the fan screen.

If installing a fan motor update only, continue at step 66 on page 39.

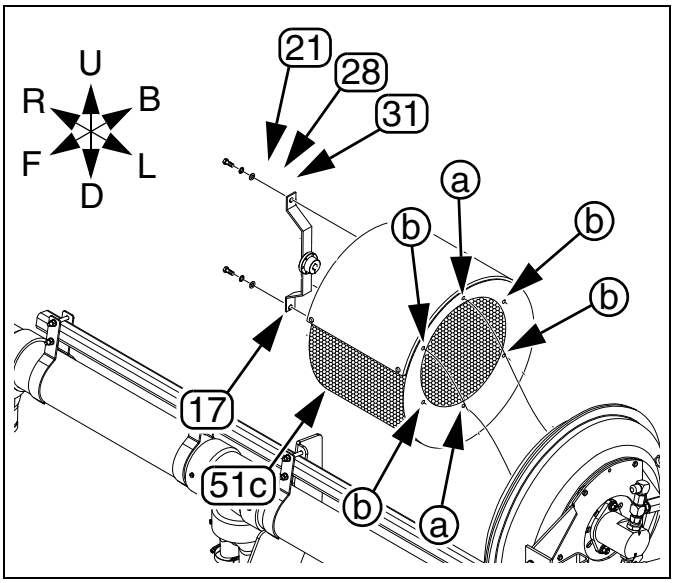

Figure 37: 34631
Re-Install Sensor Bracket

Install Fan Cooler

Refer to Figure 38

In normal use, the hydraulic fan circuit requires enough power that, absent a tractor oil radiator or local cooler, the oil would overheat. The Air-Pro® PTO pump kit includes a cooler (121) (radiator) that installs inside the fan cage.

NOTE:
Do not disconnect the fan motor hoses during cooler installation. Those hoses are disconnected and reconnected during "**Install Hoses**" on page 52.

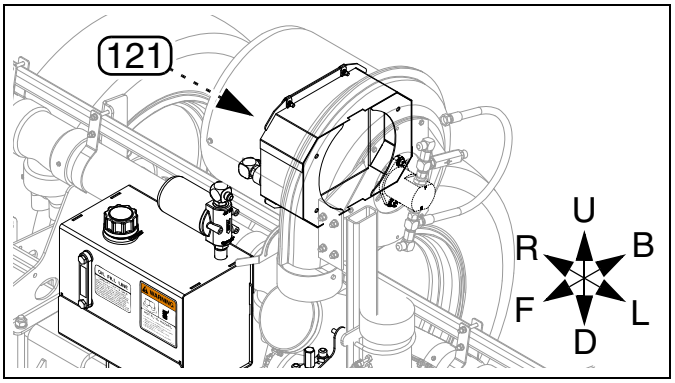

Figure 38: 34617
Fan Cooler General Location

Install Fan Cooler

Break Down Cooler Assembly

Refer to Figure 39

The cooler assembly (121) must be partially disassembled to have access to the shroud mounting holes.

57. Select one new:
    (121) 401-833L 6IN HYD FAN COOLER ASSY
    Remove and save four:
    (165) 802-159C HHCS 5/16-18X1 GR5
    Leave the nut clips (159) on the shroud (122). Separate the shroud and cooler (181):
    (122) 401-834H 6 IN HYD FAN SHROUD
    (181) 810-804C C12 HYD OIL COOLER

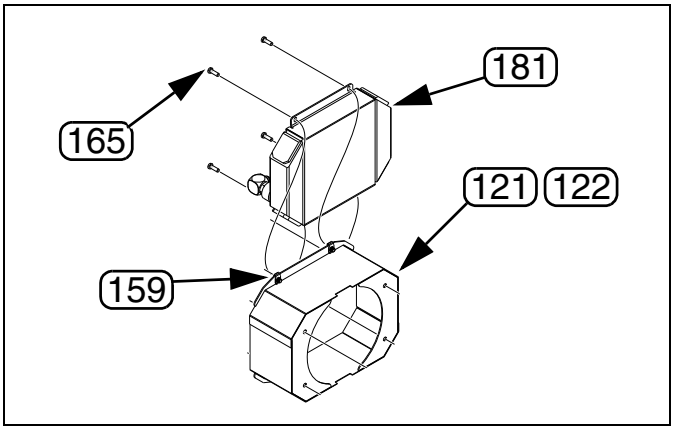

Figure 39: 34632
Break Down Cooler

Install Cooler Shroud

Refer to Figure 40 (shown with fan cage dismounted for clarity of bolt hole assignment - the cage should already be secured via top and bottom holes)

58. Select one new:
    (122) 401-834H 6 IN HYD FAN SHROUD
    and four sets saved:
    (21) 802-005C HHCS 1/4-20X1 GR5
    (28) 804-006C WASHER LOCK SPRING 1/4 PLT
    (31) 804-075C WASHER FLAT 1/4 USS PLT
    Attach the shroud through the fan cage holes, to the fan housing, using the saved fasteners.

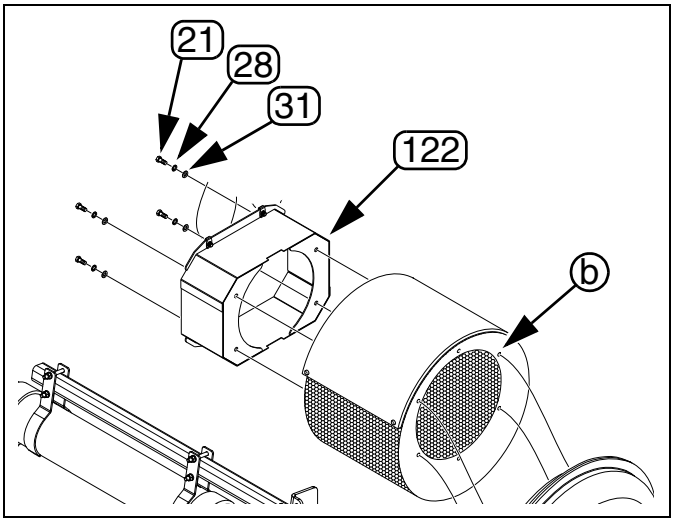

Figure 40: 34632
Install Cooler Shroud

Orient Cooler Elbows

Refer to Figure 41

59. Set the fan cooler (181) horizontally on a work surface (mounting holes at top and bottom). This is the orientation of the cooler after final installation.

    Loosen the jam nuts of the elbow fittings (190). Rotate the inlet JIC ends to point at the angles shown. When installed in the fan cage, these orientations point roughly at top center and bottom center of the cage.

    Tighten the jam nuts (see page 64 for fitting torque).

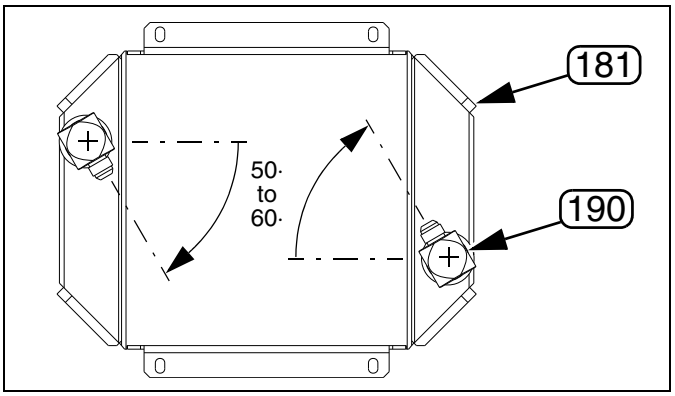

Figure 41: 34636
Orient Elbows

Re-Assemble Fan Cooler

Refer to Figure 42

60. Select the:
    (181) 810-804C C12 HYD OIL COOLER
    and four sets saved:
    (165) 802-159C HHCS 5/16-18X1 GR5
    With the elbow fittings toward the cap end of the fan, use the bolts (165) to re-attach the fan cooler (181) to the shroud (122) at the nut clips (159).

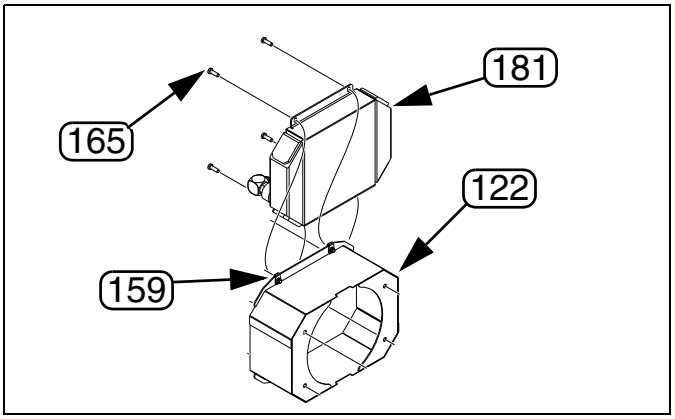

Figure 42: 34632
Re-Assemble Cooler

Modify Fan Cage

Refer to Figure 43

61. Prepare an exit opening in the fan cage for the cooler hoses. The hole needs to be:

    - located at bottom center of the fan cage,
    - on the center-line of the MJIC elbow ports,
    - wide enough for a 3/4 FJIC hose fitting, about: $1^1/_4$ inches or 3.2 cm),
    - long enough for one hose diameter plus one 3/4 FJIC hose fitting, about $2^1/_4$ inches or 5.7 cm) total, and
    - have a smooth edge. Making cuts (- - -) as shown, and folding back the cage edges, to the inside, provides an adequately smooth edge.

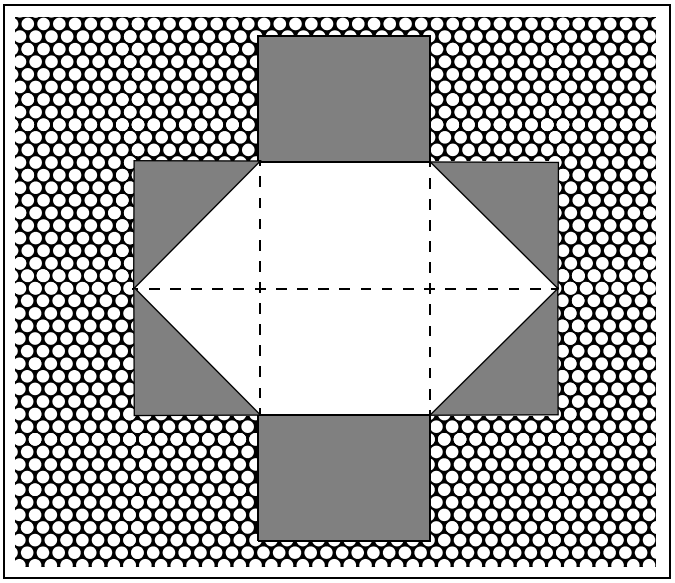

Figure 43:
Hose Opening in Cage

Attach Cooler Hoses & Close

Refer to Figure 44

62. Select one new cooler inlet hose:
    (194) 811-268C HH1/2R2 048 3/4FJIC
    Route the hose through the hole prepared at step 61. Connect it to the upper fitting on the cooler.
63. Mark the free end of this hose “PORT T”.
    This step is particularly important for kits 401-848A, 401-879A, 411-166A and 411-168A, which use identical hoses for inlet and outlet.
64. Select one new cooler outlet hose (h) (hose is kit dependent):

Kit	Outlet Hose (h)
401-845A	(195) 811-269C HH1/2R2 036 3/4FJIC
401-846A	(194) 811-268C HH1/2R2 048 3/4FJIC
401-847A	(195) 811-269C HH1/2R2 036 3/4FJIC
401-848A	(194) 811-268C HH1/2R2 048 3/4FJIC
401-849A	(203) 811-773C HH1/2R2 066 3/4FJIC
401-879A	(194) 811-268C HH1/2R2 048 3/4FJIC
411-016A	(197) 811-291C HH1/2R2 072 3/4FJIC
411-035A	(228) 851-163C HH3/8R2 045 3/4FJIC MJIC
411-036A	(228) 851-163C HH3/8R2 045 3/4FJIC MJIC
411-037A	(227) 851-053C HH3/8R2 046 3/4FJIC
411-038A	(227) 851-053C HH3/8R2 046 3/4FJIC
411-163A	(195) 811-269C HH1/2R2 036 3/4FJIC
411-164A	(194) 811-268C HH1/2R2 048 3/4FJIC
411-165A	(195) 811-269C HH1/2R2 036 3/4FJIC
411-166A	(194) 811-268C HH1/2R2 048 3/4FJIC
411-167A	(203) 811-773C HH1/2R2 066 3/4FJIC
411-168A	(194) 811-268C HH1/2R2 048 3/4FJIC

    Route the hose through the hole prepared at step 61. Connect it to the lower fitting on the cooler.
65. Mark the free end of this hose “FILTER”.

NOTE:
The external ends of these hoses are not connected at this time.

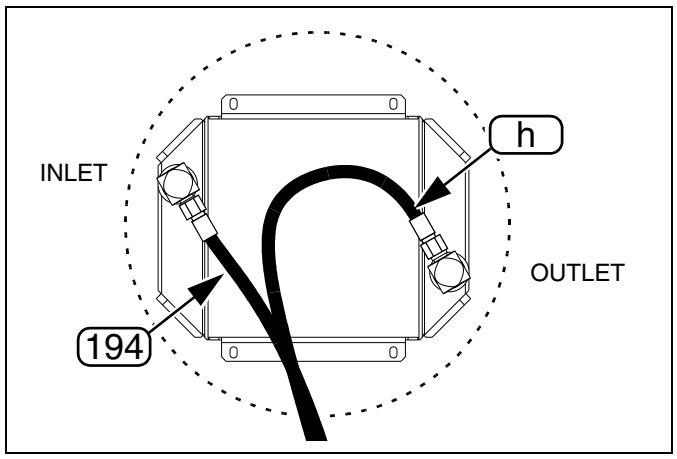

Figure 44:
Cooler Hoses
34636

Refer to Figure 45

66. Select one saved:
    (51e) 890-624C SCREEN FAN COVER
    and four saved sheet metal screws (5).
    Re-attach the cover to the cage (51c).

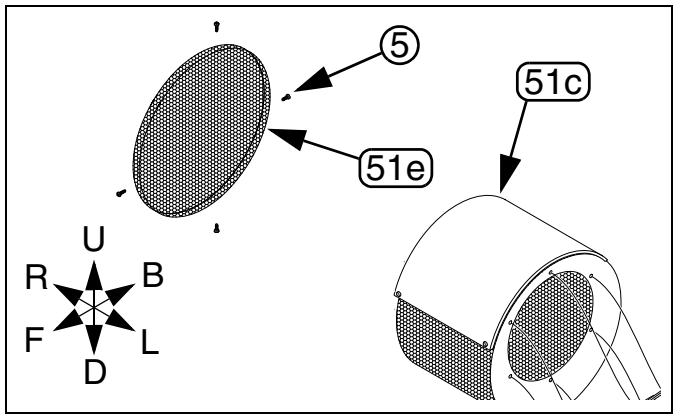

Figure 45:
Close Fan Cage
34631

Reconnect Hitch Hoses

If *not* installing a 401-956A fan motor update, continue at "**Install Oil Reservoir**" on page 41.

The steps below are for the fan motor update, when installed without also installing a PTO kit.

Refer to Figure 46

67. Connect the hose ⓑ marked "B" to the elbow at Port B of the new motor. Connect the hose ⓐ marked "A" to the elbow at Port A of the new motor.
68. Re-assemble the QD fittings at the hitch ends of the hoses. Re-install any hose handles provided. Install a handle marked for retracted cylinder on the "B" hose, and a handle marked for extended cylinder on the "A" hose.

This completes installation of the 401-956A fan motor update, when installed without also installing a PTO pump.

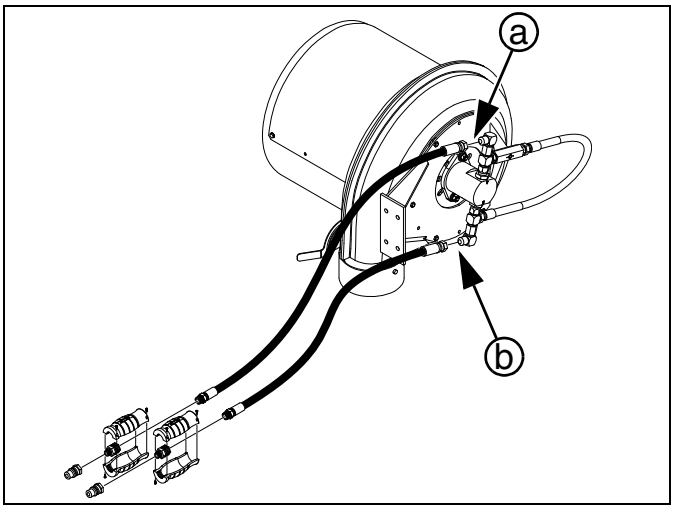

34676

Figure 46:
2-Port Fan Hoses to Hitch

Install Oil Reservoir

Determine Reservoir Location

Refer to Figure 47 (top pane is a composite view of all tool bar/truss configurations)

69. Determine the reservoir mounting location based on the planter configuration and kit:

Kit	Location	Go To
401-845A	① Row Unit at Tool Bar	page 42
401-846A	① Row Unit at Tool Bar	page 42
401-847A	① Row Unit at Tool Bar	page 42
401-848A	① Row Unit at Tool Bar	page 42
401-849A	② Fertilizer Sub-Frame	page 44
401-879A	③ Mainframe Truss	page 45
411-016A	④ Below Main Seed Box	page 46
411-035A	⑤ Tongue at Hitch	page 47
411-036A	⑤ Tongue at Hitch	page 47
411-037A	⑤ Tongue at Hitch	page 47
411-038A	⑤ Tongue at Hitch	page 47
411-163A	① Row Unit at Tool Bar	page 42
411-164A	① Row Unit at Tool Bar	page 42
411-165A	① Row Unit at Tool Bar	page 42
411-166A	① Row Unit at Tool Bar	page 42
411-167A	② Fertilizer Sub-Frame	page 44
411-168A	③ Mainframe Truss	page 45

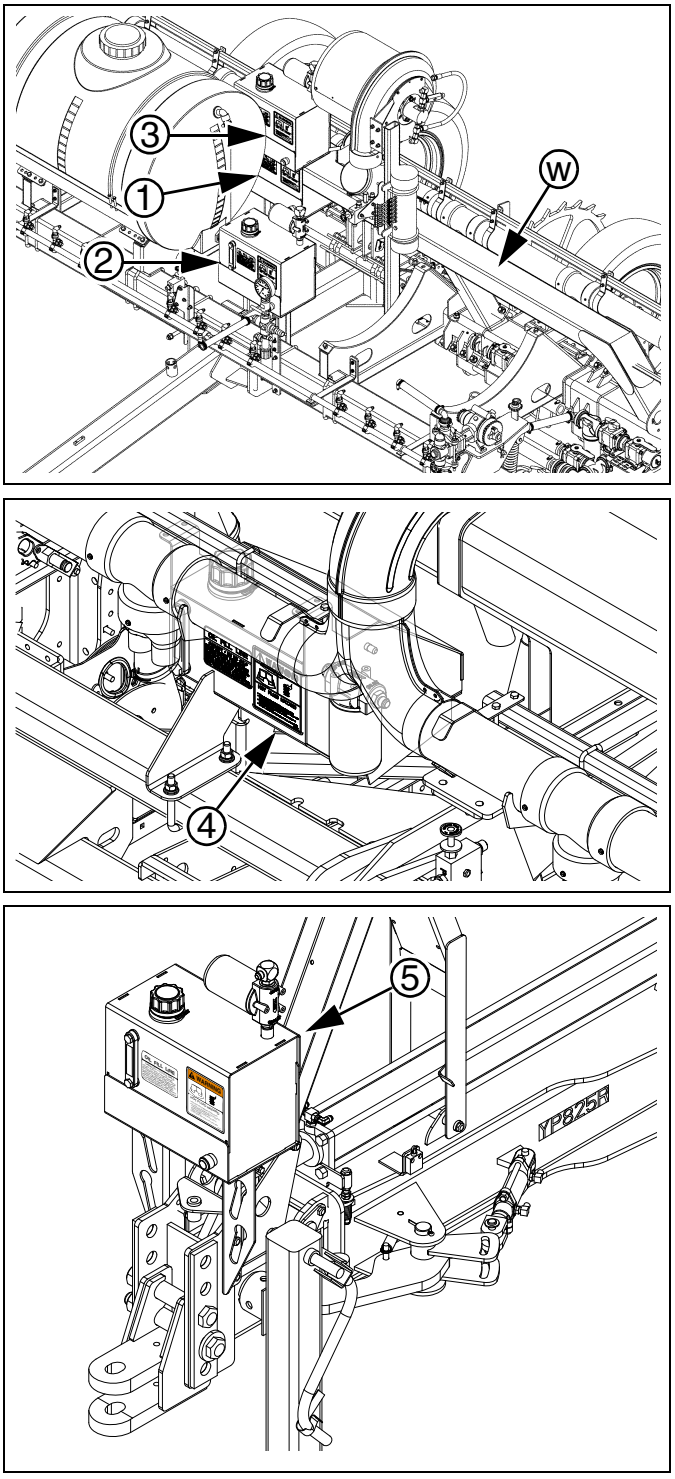

Figure 47: Reservoir Locations:
Tool Bar or Truss
Below Main Box
Tongue at Hitch

34657
36293
36295

Reservoir on Row Unit Tool Bar

This topic applies only to kits 401-845A, 401-846A, 401-847A, 401-848A, 411-163A, 411-164A, 411-165A and 411-166A. For other kits, find the topic starting page in the table on page 41.

Refer to Figure 48

Kit covered by this page have this unique component:

130 401-842L HYD RES W/ FILTER ASSY

This tank weldment has a single front-facing mount plate ① and straight bolts, designed to replace the U-bolts of one row unit mount.

The row unit reservoir location is used with:

- planters that have no fertilizer sub-frame (excluding YP825A3P “wide row” models with a truss mainframe),
- planters with dry fertilizer, or
- YP425A planters with liquid fertilizer.

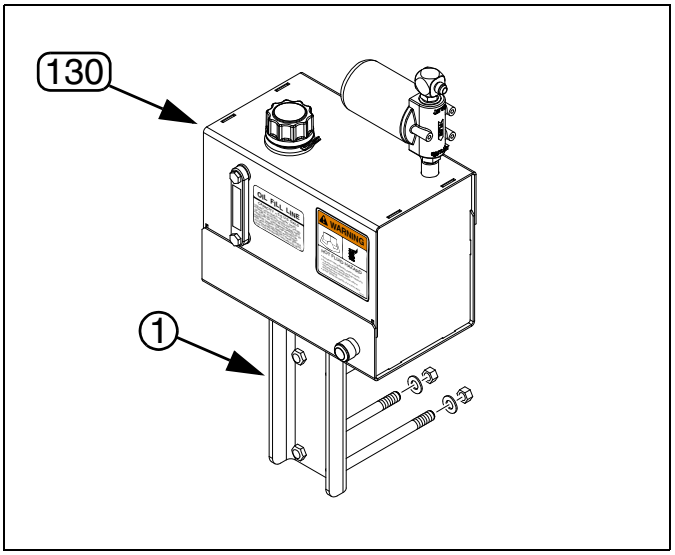

Figure 48: 34658
Row Unit Reservoir 401-842L

Identify Row Location

70. Consult the table below for the row location. Rows are counted from the implement left side, which is row 1. Count individual rows (count each row of a twin row separately).

YP425 Planter	Row
YP425A-0430	3
YP425A-0436	3
YP425A-0438	3
YP425A-0440	3
YP425A-0470	3
YP425A-0838	6
YP425A-0840	6
YP425A-08TR	6
YP425A-08TR36	6
YP425A3P-0430	4
YP425A3P-0436	4
YP425A3P-0438	4
YP425A3P-0440	4
YP425A3P-0470	4
YP425A3P-0836	8
YP425A3P-0838	8
YP425A3P-0840	8
YP425A3P-08TR	8

YP625 Planter	Row
YP625A-0630	4
YP625A-0636	4
YP625A-0638	4
YP625A-0640	4
YP625A-0670	4
YP625A-1238	8
YP625A-1240	8
YP625A-12TR	8
YP625A-12TR36	8
YP625A3P-0630	5
YP625A3P-0636	5
YP625A3P-0638	5
YP625A3P-0640	5
YP625A3P-0670	5
YP625A3P-1236	10
YP625A3P-1238	10
YP625A3P-1240	10
YP625A3P-12TR	10

YP825 Planter	Row
YP825A-0830	5
YP825A-0836	5
YP825A-0838	5
YP825A-0840	5
YP825A-0870	5
YP825A-16TR	10
YP825A-16TR36	10
YP825A-16TR38	10
YP825A-16TR40	10
YP825A3P-0830	6
YP825A3P-0836	N/A[a]
YP825A3P-0838	N/A[a]
YP825A3P-0870	6
YP825A3P-1636	N/A[a]
YP825A3P-1638	N/A[a]
YP825A3P-1640	N/A[a]
YP825A3P-16TR	12
YP825A3P-0840	N/A[a]

a. Not Applicable - these planter models use kit 401-879A (reservoir installation on truss, page 45).

Support Row Unit

Refer to Figure 48

71. Use a grease pencil to mark, on the back of the tool bar, the station of the designated row unit.
72. Use a hoist and multiple lines to support the weight of the row unit.
73. Remove the two U-bolts ② and four sets of washers and nuts. These fasteners are not re-used.

Mount Row Unit Reservoir

74. Select one new:
    (130) 401-842L HYD RES W/ FILTER ASSY
    and four sets new:
    (162) 802-105C HHCS 5/8-11X9 GR5
    (175) 804-022C WASHER LOCK SPRING 5/8 PLT
    (170) 803-021C NUT HEX 5/8-11 PLT
    With the decal side facing forward, align the mount plate with the holes in the row unit mount. Verify row unit station on the tool bar. Secure reservoir plate and row unit mount to tool bar with bolts (162), lock washers (175) and nuts (170).

Continue at "**Install Flow Control Valve**" on page 48.

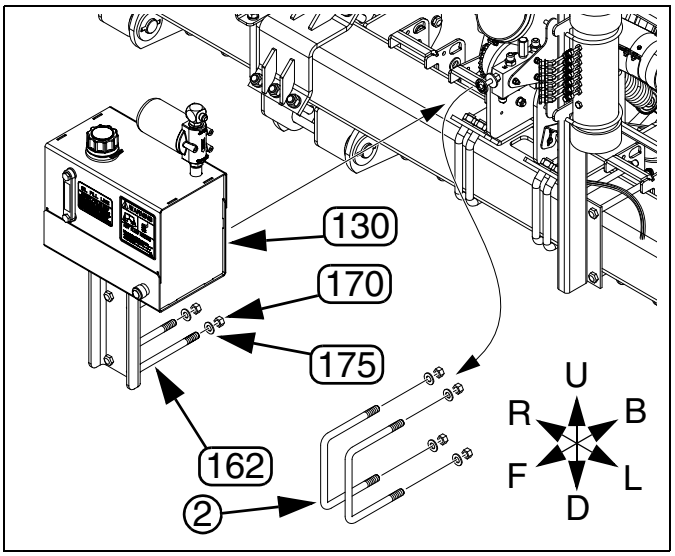

Figure 49: 34660
Install Row Unit Reservoir

Reservoir on Fertilizer Sub-Frame

This topic applies only to kits 401-849A and 411-167A, and planter models:

- YP625A with liquid fertilizer, or
- YP825A with liquid fertilizer.

For other kits, find the topic starting page in the table on page 41.

Refer to Figure 50

The fertilizer sub-frame reservoir location is used with 625A/825A planters that have a fertilizer sub-frame. It applies to kits 401-849A and 411-167A, which have this component unique to the fertilizer sub-frame location:

132 401-844L 6 8 FERT HYD RES W/ FILTER

This tank weldment has a two side-facing mount plates ③ and straight bolts, designed to straddle the center rib of the fertilizer sub-frame.

75. Select one new:

    132 401-844L 6 8 FERT HYD RES W/ FILTER

    and four sets new:

    161 802-047C HHCS 1/2-13X6 GR5

    173 804-015C WASHER LOCK SPRING 1/2 PLT

    169 803-020C NUT HEX 1/2-13 PLT

    If the fasteners are pre-installed in the reservoir assembly, completely remove them.

Refer to Figure 51 (which is a view from below left rear)

76. With the front face (which has the sight gauge ④) facing forward, lower the reservoir weldment down over the forward end of the center rib ⑤ of the fertilizer sub-frame. Position it as far forward on the rib as possible.

77. Insert two bolts 161 through the top holes of the weldment plates, routing them underneath all hydraulic hoses ⑥ present.

    Insert the remaining two bolts through the lower side plate holes, and under the frame rib.

    Secure all bolts with lock washers 173 and nuts 169.

Continue at “**Install Flow Control Valve**” on page 48.

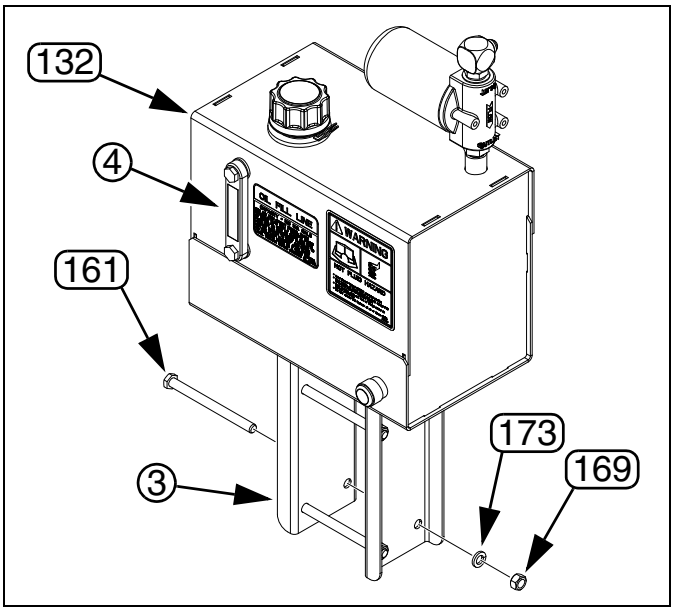

Figure 50: 34659
Fertilizer Reservoir 401-844L

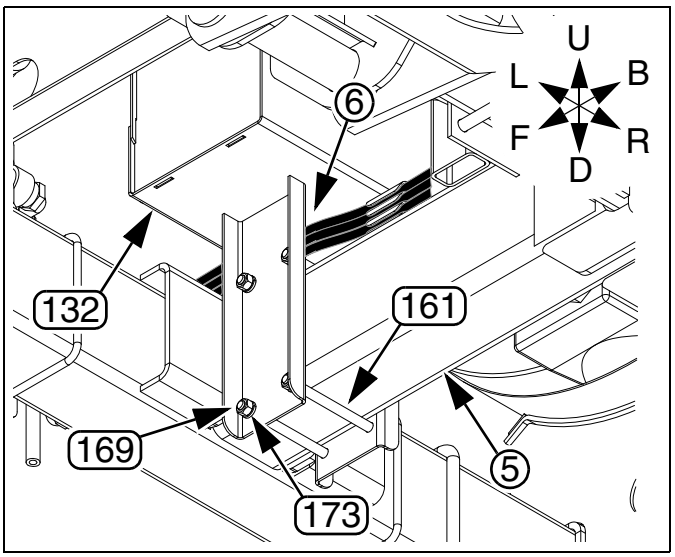

Figure 51: 34662
Reservoir on Sub-Frame Rib

Reservoir on Mainframe Truss

This topic applies only to kits 401-879A and 411-168A, and planter models:

YP825A3P-0836	YP825A3P-1636	YP825A3P-1640
YP825A3P-0838	YP825A3P-1638	YP825A3P-0840

For other kits, find the topic starting page in the table on page 41.

Refer to Figure 52 and Figure 53

The truss-mount reservoir location is used with 3-point "wide row" planters that have a truss weldment ① above the mainframe tool bar. It applies to kits 401-879A and 411-168A, which have the following component unique to the truss location:

140 401-878L 3PT 8 ROW WIDE HYD RES W/FLTR

This tank weldment has two mount plates ② (front- and rear-facing) and straight bolts, designed to straddle the truss tube.

78. Select one new:
    140 401-878L 3PT 8 ROW WIDE HYD RES W/FLTR
    and four sets new:
    166 802-377C HHCS 1/2-13X7 1/2 GR5
    173 804-015C WASHER LOCK SPRING 1/2 PLT
    169 803-020C NUT HEX 1/2-13 PLT
    If the fasteners are pre-installed in the reservoir assembly, completely remove them.
79. With the front face (which has the sight gauge ④) facing forward, lower the reservoir weldment down over the right side of the truss tube, at a distance of:
    27 inches (68.6 cm)
    from hitch center-line to reservoir mount center-line.
80. Insert two bolts 161 through the holes of the weldment plates, underneath the truss tube.

    Secure the bolts with lock washers 173 and nuts 169.

Continue at "**Install Flow Control Valve**" on page 48.

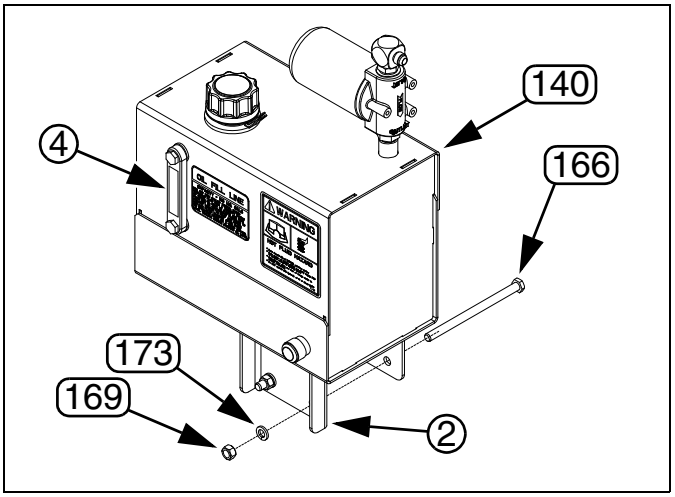

Figure 52: 34663
Truss-Mount Reservoir 401-878L

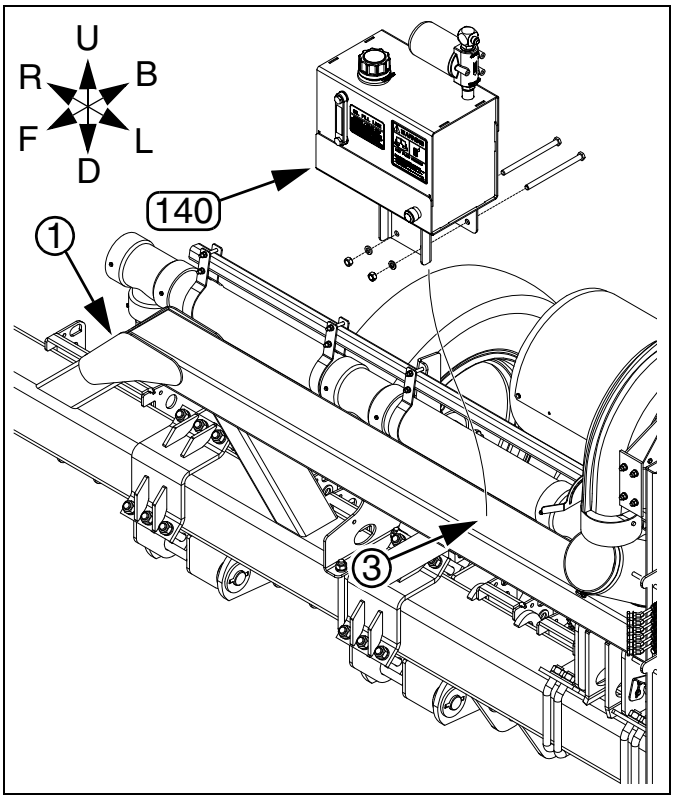

Figure 53: 34664
Reservoir to Truss

Reservoir Under Main Seed Box

This topic applies only to kit 411-016A and planter models 2025A and 2525A. For other kits, find the topic starting page in the table on page 41.

Refer to Figure 54 and Figure 47 on page 41

The under-box reservoir location is used with 3-point box planters. It applies to kit 411-016A, which has the following component unique to the under-box location:

(141) 411-017L LB PTO TANK

This tank weldment has a forward mount plate ① and a rear mount base ②, secured to the planter by U-bolts to the right of the hitch. The forward mount plate rests on the upper frame tube ③. The rear mount base rests on the angle brace ④. The rear base has two sets of bolt holes. The LH holes are shown with the U-bolt. An alternate U-bolt location is shown at ⑤

The tank weldment also has top brackets ⑥, which may be used to re-secure air system pipe brackets.

81. Examine the configuration of the planter. Temporarily remove some air system piping to allow access to the installation site.
82. Select one each new:
    (141) 411-017L LB PTO TANK
    which includes (and may have pre-installed):
    one each new:
    (178) 806-159C U-BOLT 1/2-13 X 5 1/32 X 4 1/2
    (176) 806-144C U-BOLT 1/2-13 X 3 1/32 X 3
    and four sets new:
    (174) 804-016C WASHER FLAT 1/2 SAE PLT
    (173) 804-015C WASHER LOCK SPRING 1/2 PLT
    (169) 803-020C NUT HEX 1/2-13 PLT

    Position the reservoir so that the bolt holes of the front plate ① straddle the upper frame tube ③, at least one set of rear base ② bolt holes straddle the angle brace ④.

    Secure the front plate with U-bolt (178), flat washers (174), lock washers (173) and nuts (169).

    Secure the rear base with U-bolt (176), flat washers (174), lock washers (173) and nuts (169).
83. Re-install any removed air system pipes.

Continue at "**Install Flow Control Valve**" on page 48.

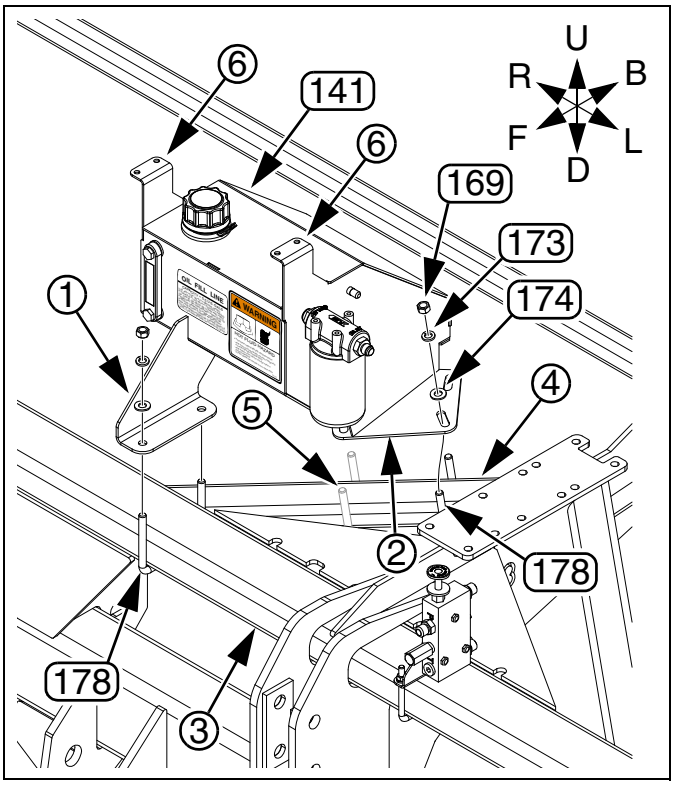

Figure 54: 36298
Under-Box Reservoir 411-017L

Reservoir on Tongue at Hitch

This topic applies only to kits 411-035A, 411-036A, 411-037A and 411-038A for planter model YP825AR. For other kits, find the topic starting page in the table on page 41.

Refer to Figure 55

On the model YP825AR planter, the reservoir mounts on the hitch weldment.

84. Remove the cotter pin (not shown) and hose post ①. These parts are not re-installed. The function of this post (hose storage) is replaced by the keyhole openings in the new tank mount.
85. Select one new:
    148 411-039L 825R HYD TANK RES ASSY
    and four sets new:
    163 802-128C HHCS 1/2-13X2 GR5
    173 804-015C WASHER LOCK SPRING 1/2 PLT
    169 803-020C NUT HEX 1/2-13 PLT
    If the fasteners are pre-installed in the reservoir assembly, completely remove them.

    With the reservoir sight gauge ② to Front, install the reservoir assembly on the rear 4 holes ③ of the tongue adjustment plate.

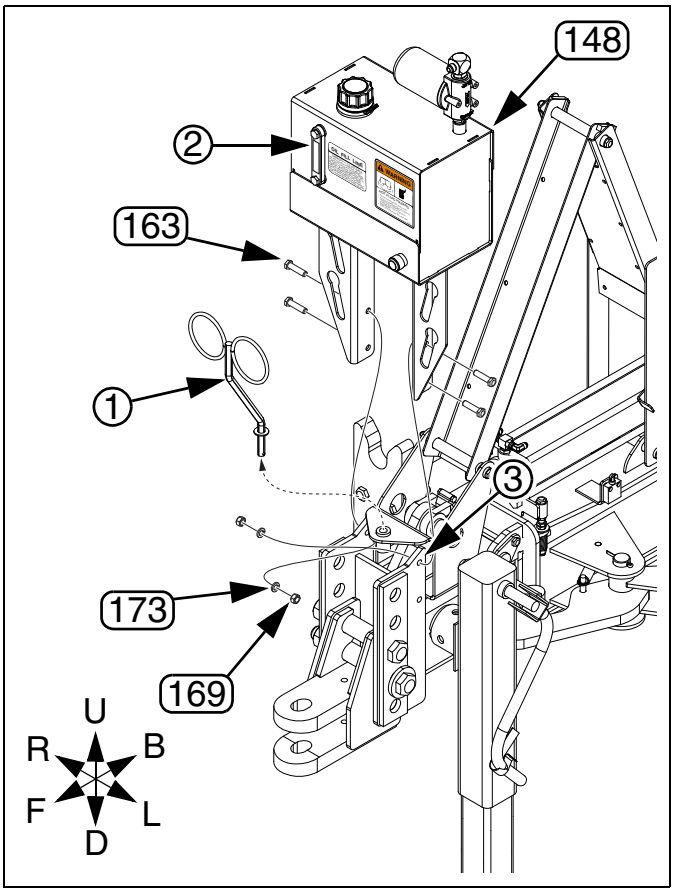

Figure 55: 36296
Tongue Reservoir 411-039L

Install Flow Control Valve

For model YP825AR with hydraulic seed meter drive, a flow control valve is already installed. Continue at "**Install Hoses**" on page 52.

Determine Control Location

Refer to Figure 56 (top view is a composite view of YP4/6/825A/3P configurations, excluding YP825AR)

86. Determine the reservoir mounting location based on the planter and configuration:

Kit	Location	Go To
401-845A	① Fan Mast	page 49
401-846A	① Fan Mast	page 49
401-847A	② Fertilizer Sub-Frame	page 49
401-848A	① Fan Mast	page 49
401-849A	② Fertilizer Sub-Frame	page 49
401-879A	② Fan Mast	page 49
411-016A	③ Upper Frame Tube	page 50
411-035A	④ Forward Tool Bar	page 50
411-036A	④ Forward Tool Bar	page 50
411-037A	Valve already installed[a]	n/a
411-038A	Valve already installed[a]	n/a
411-163A	① Fan Mast	page 49
411-164A	① Fan Mast	page 49
411-165A	② Fertilizer Sub-Frame	page 49
411-166A	① Fan Mast	page 49
411-167A	② Fertilizer Sub-Frame	page 49
411-168A	② Fan Mast	page 49

a. On model YP825AR with hydraulic drive, the fan flow control valve is factory-installed as part of the shared meter-drive/fan circuit.

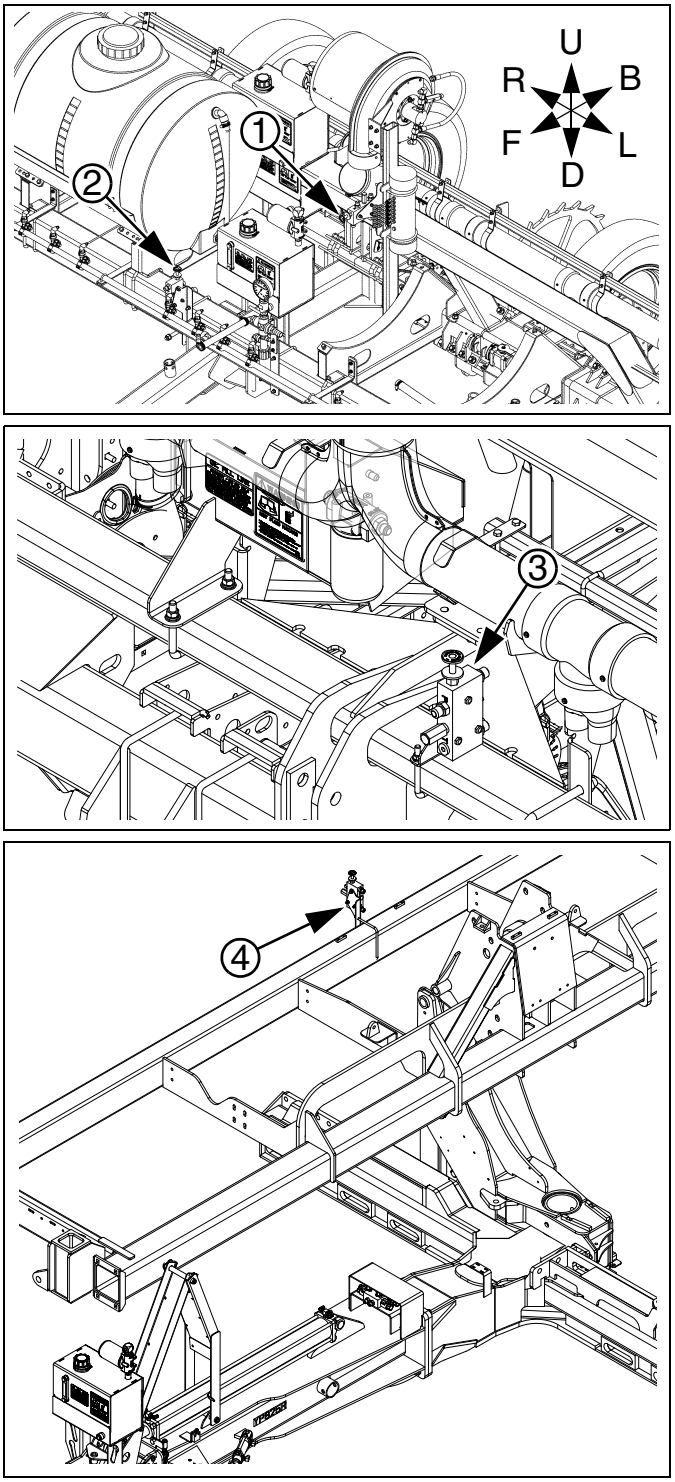

Figure 56: Flow Control Locations:
Subframe / Fan Mast
Upper Frame Tube
Forward Tool Bar

34657
36293
36300

Install Controls on Fan Mast

This page applies only to kits 401-845A, 401-846A, 401-879A, 411-163A, 411-164A, and 411-168A. For other kits, find the topic starting page in the table on page 48.

Refer to Figure 57 (a view from below right front)

87. Remove and save the two forward flanged:
    (27) 803-360C NUT HEX FLG 3/8-16 GR8 ZNYCR
88. Select one new:
    (124) 401-835S RIGID PLNTR HYD FL CNTRL ASSY
    The valve assembly has port letters stamped on the valve body. Orient the assembly so that ports P & T are on top, and ports T & M are on the bottom. Secure the valve assembly to the air tank U-bolts with the saved nuts (27).

Continue at "**Install Hoses**" on page 52.

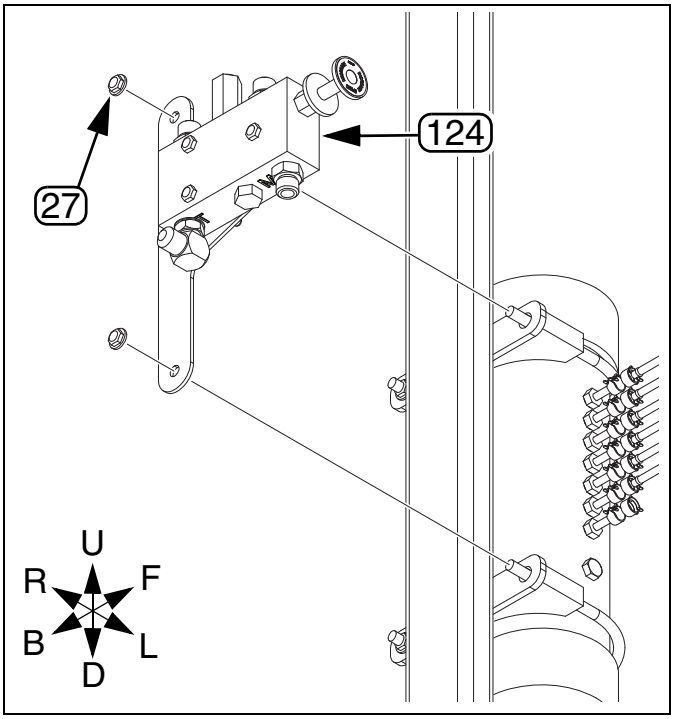

Figure 57: 34666A
Flow Controls on Fan Mast

Install Controls on Fertilizer Frame

These instructions apply to kits 401-847A, 401-848A, 401-849A, 411-165A, 411-166A and 411-167A. For other kits, find the topic starting page in the table on page 48.

Refer to Figure 58

89. Select one each new:
    (126) 401-837K FERT FRAME FLOW CONTROL ASSY
    (177) 806-150C U-BOLT 3/8-16 X 7 1/32 X 6 GR5
    and two sets new:
    (172) 804-013C WASHER LOCK SPRING 3/8 PLT
    (168) 803-014C NUT HEX 3/8-16 PLT
    If the fasteners are pre-installed in the valve assembly, completely remove them.
90. Place the U-bolt (177), from the rear at the front sub-frame tube as close to the hitch as possible.
91. The valve assembly (126) has port letters stamped on the valve body. Orient the assembly so that ports T & M are toward the front, and P & T toward the back. Secure the valve assembly to the U-bolts with the lock washers (172) and nuts (168).

Continue at "**Install Hoses**" on page 52.

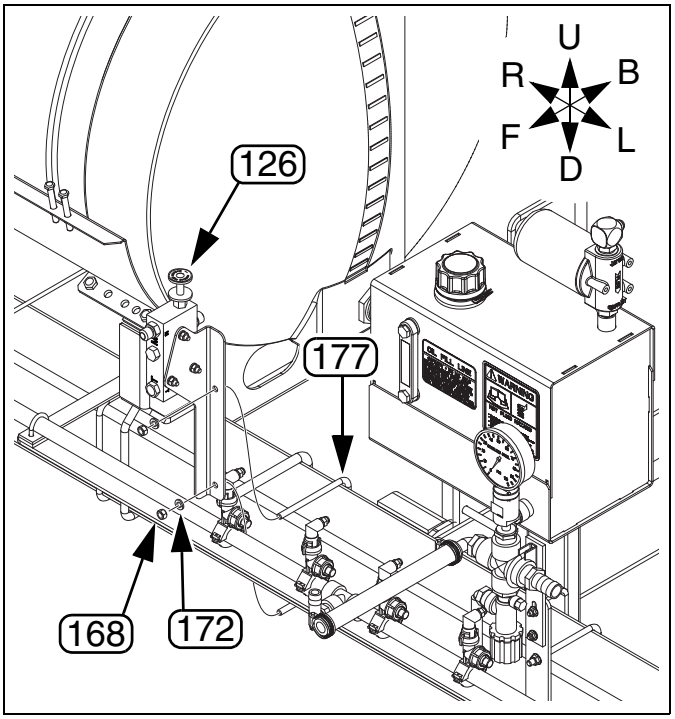

Figure 58: 34668A
Flow Controls on Sub-Frame

Install Controls on Upper Frame Tube

These instructions apply to kit 411-016A. For other kits, find the topic starting page in the table on page 48.

Refer to Figure 59

92. Select one each new:
    142 411-018L LB FLOW CONTROL ASSY
    179 806-165C U-BOLT 3/8-16 X 5 1/32 X 4 1/4
    and two sets new:
    172 804-013C WASHER LOCK SPRING 3/8 PLT
    168 803-014C NUT HEX 3/8-16 PLT
    If the fasteners are pre-installed in the valve assembly, completely remove them.
93. Place the U-bolt 179, from below at the upper frame tube, approximately centered between the hitch top link plates and the left hand 2-point plates.
94. The valve assembly 142 has port letters stamped on the valve body. Orient the assembly so that ports T & P are toward the front, and M & T toward the back. Secure the valve assembly to the U-bolts with the lock washers 172 and nuts 168.

Continue at “**Install Hoses**” on page 52.

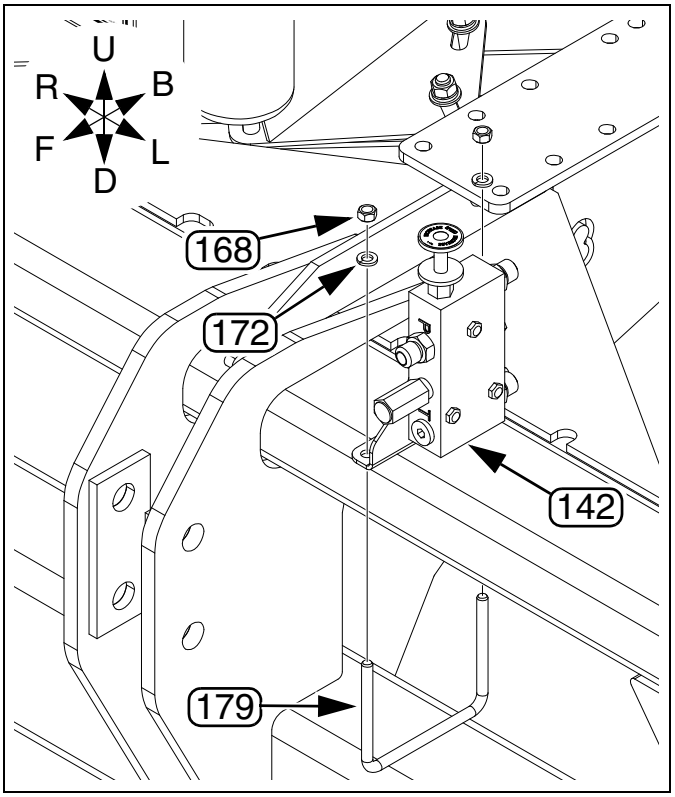

Figure 59: 36304
Flow Controls on Upper Frame Tube

Install Controls on Forward Tool Bar

These instructions apply to kits 411-035A and 411-036A. For other kits, find the topic starting page in the table on page 48.

Refer to Figure 60 (in which the orientation rose presumes that the mainframe is in the unfolded position; if folded, the front of the mainframe is actually to implement right)

95. Select one each new:
    (146) 411-031K YP825R FLOW CONTROL ASSY
    (177) 806-150C U-BOLT 3/8-16 X 7 1/32 X 6 GR5
    and two sets new:
    (172) 804-013C WASHER LOCK SPRING 3/8 PLT
    (168) 803-014C NUT HEX 3/8-16 PLT
    If the fasteners are pre-installed in the valve assembly, completely remove them.
96. Place the U-bolt (177), from the rear at approximately the center of the forward tool bar on the mainframe.
97. The valve assembly (146) has port letters stamped on the valve body. Orient the assembly so that ports T & P are toward the front, and M & T toward the back. Secure the valve assembly to the U-bolts with the lock washers (172) and nuts (168).

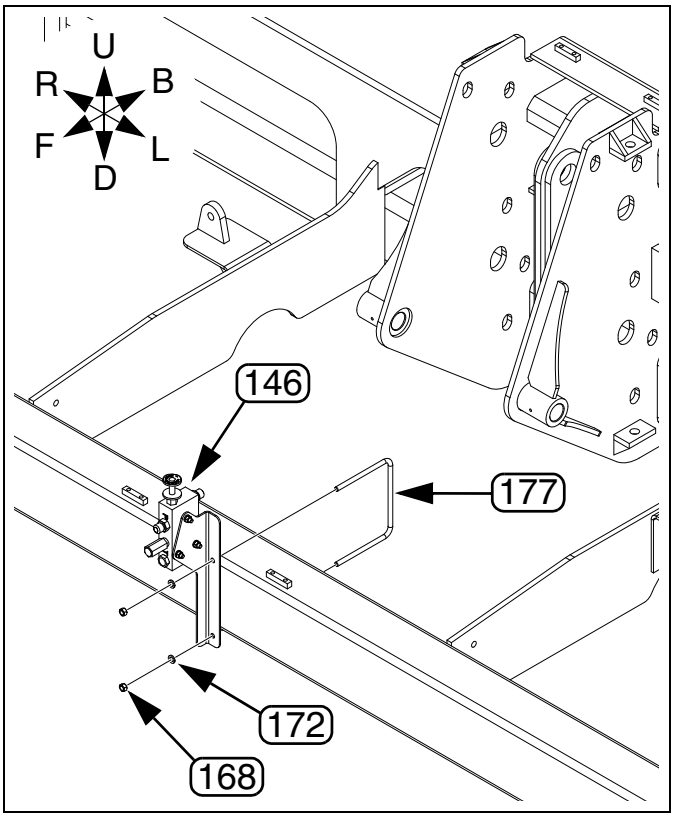

Figure 60: 36306
Flow Controls on Forward Tool Bar

Install Hoses

General Hose Installation

Hose routing and connections vary by kit. There are separate pages for each unique hose configuration.

The new hoses may be installed in any order. Secure them with any available clamps along their routes.

Continue at the page for your kit.

Kit	Page
401-845A	52
401-846A	53
401-847A	54
401-848A	55
401-849A	56
401-879A	57
411-016A	58
411-035A	59
411-036A	59

Kit	Page
411-037A	60
411-038A	60
411-163A	52
411-164A	53
411-165A	54
411-166A	55
411-167A	56
411-168A	57

401-845A and 411-163A Flow Control Hydraulics

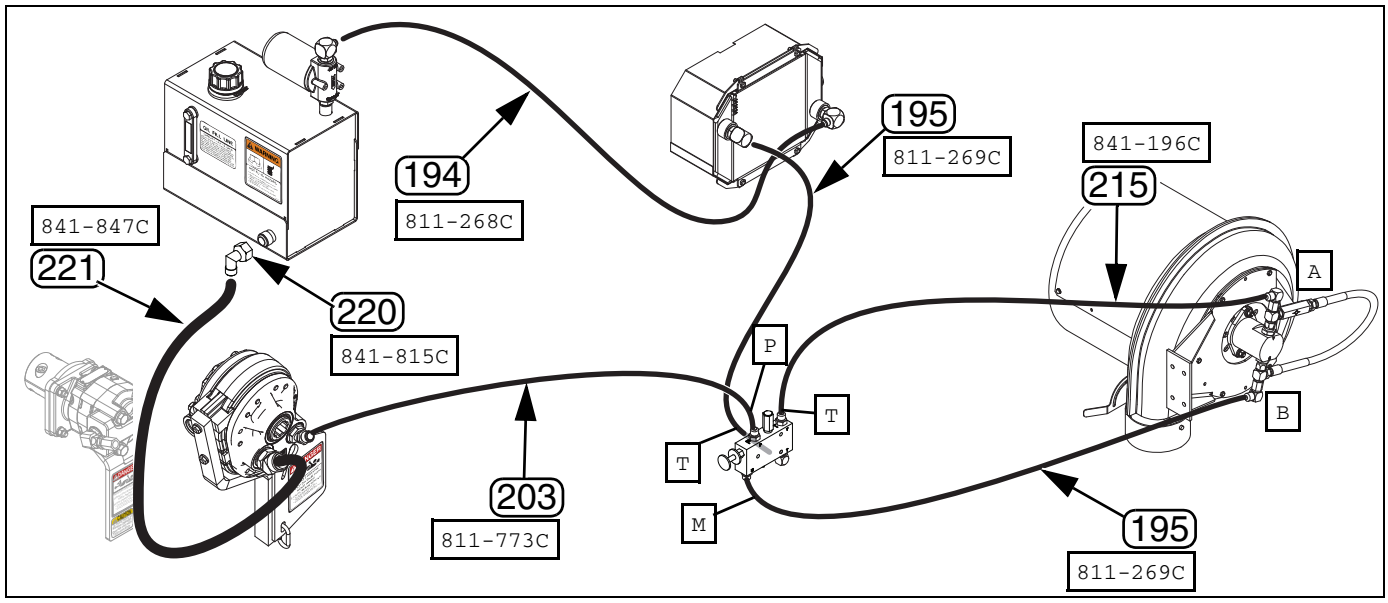

Figure 61:
401-845A and 411-163A Hydraulic Hose Routing

34671A
36312

401-845A and 411-163A Hydraulic Connections	Hose Identification		
	Callout	Hose	Hose Description
Elbow at Reservoir Outlet	220	841-815C	EL 1 5/16FJIC 1 5/16MJIC
Reservoir Outlet to Pump Inlet	221	841-847C	HH1R4 90 1 5/16FJIC
Pump Outlet to Valve Port P	203	811-773C	HH1/2R2 066 3/4FJIC
Valve Port M to Fan Motor Inlet B	195	811-269C	HH1/2R2 036 3/4FJIC
Fan Motor Outlet A to Valve Port T	215	841-196C	HH1/2R2 024 3/4FJIC
Valve Port T to Cooler Inlet	195	811-269C	HH1/2R2 036 3/4FJIC
Cooler Outlet to Oil Filter	194	811-268C	HH1/2R2 048 3/4FJIC

401-846A and 411-164A Flow Control Hydraulics

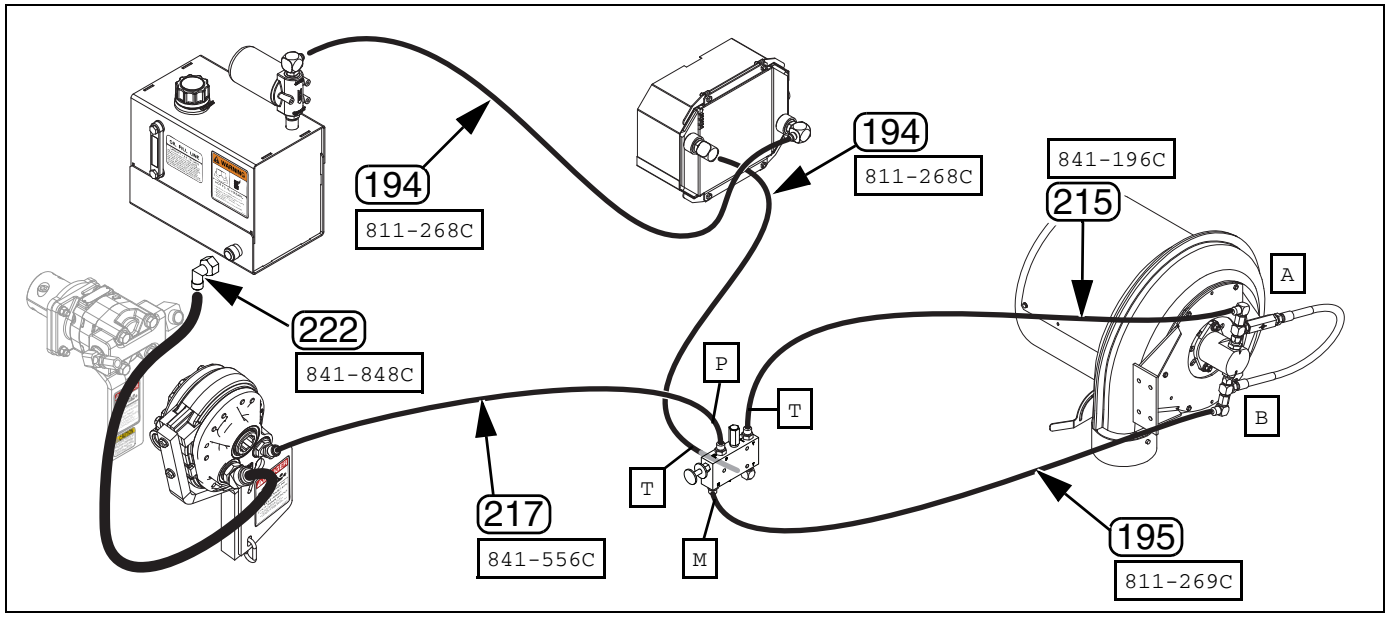

Figure 62:
401-846A and 411-164A Hydraulic Hose Routing

34672A
36312

401-846A and 411-164A Hydraulic Connections	Hose Identification		
	Callout	Hose	Hose Description
Reservoir Outlet to Pump Inlet	222	841-848C	HH1R4 144 1 5/16FJIC
Pump Outlet to Valve Port P	217	841-556C	HH1/2R2 144 3/4FJIC
Valve Port M to Fan Motor Inlet B	195	811-269C	HH1/2R2 036 3/4FJIC
Fan Motor Outlet A to Valve Port T	215	841-196C	HH1/2R2 024 3/4FJIC
Valve Port T to Cooler Inlet	194	811-268C	HH1/2R2 048 3/4FJIC
Cooler Outlet to Oil Filter	194	811-268C	HH1/2R2 048 3/4FJIC

401-847A and 411-165A Flow Control Hydraulics

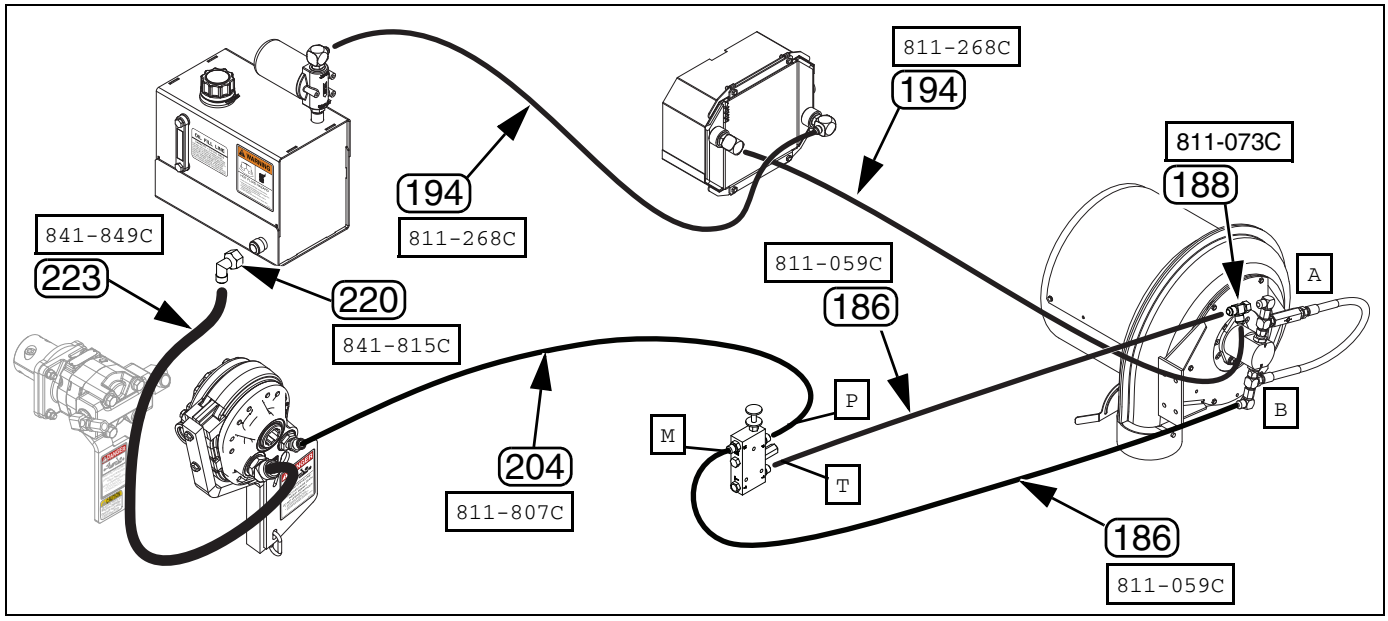

Figure 63:
401-847A and 411-165A Hydraulic Hose Routing

34673A
36312

401-847A and 411-165A Hydraulic Connections	Hose Identification		
	Callout	Hose	Hose Description
Elbow at Reservoir Outlet	220	841-815C	EL 1 5/16FJIC 1 5/16MJIC
Reservoir Outlet to Pump Inlet	223	841-849C	HH1R4 168 1 5/16FJIC
Pump Outlet to Valve Port P	204	811-807C	HH1/2R2 120 3/4FJIC
Valve Port M to Fan Motor Inlet B	186	811-059C	HH1/2R2 080 3/4FJIC
Tee at Fan Motor Outlet A	188	811-073C	TE 3/4MJIC 3/4MJIC 3/4FJIC
Valve Port T to Fan Motor Tee	186	811-059C	HH1/2R2 080 3/4FJIC
Fan Motor Tee to Cooler Inlet	194	811-268C	HH1/2R2 048 3/4FJIC
Cooler Outlet to Oil Filter	194	811-268C	HH1/2R2 048 3/4FJIC

401-848A and 411-166A Flow Control Hydraulics

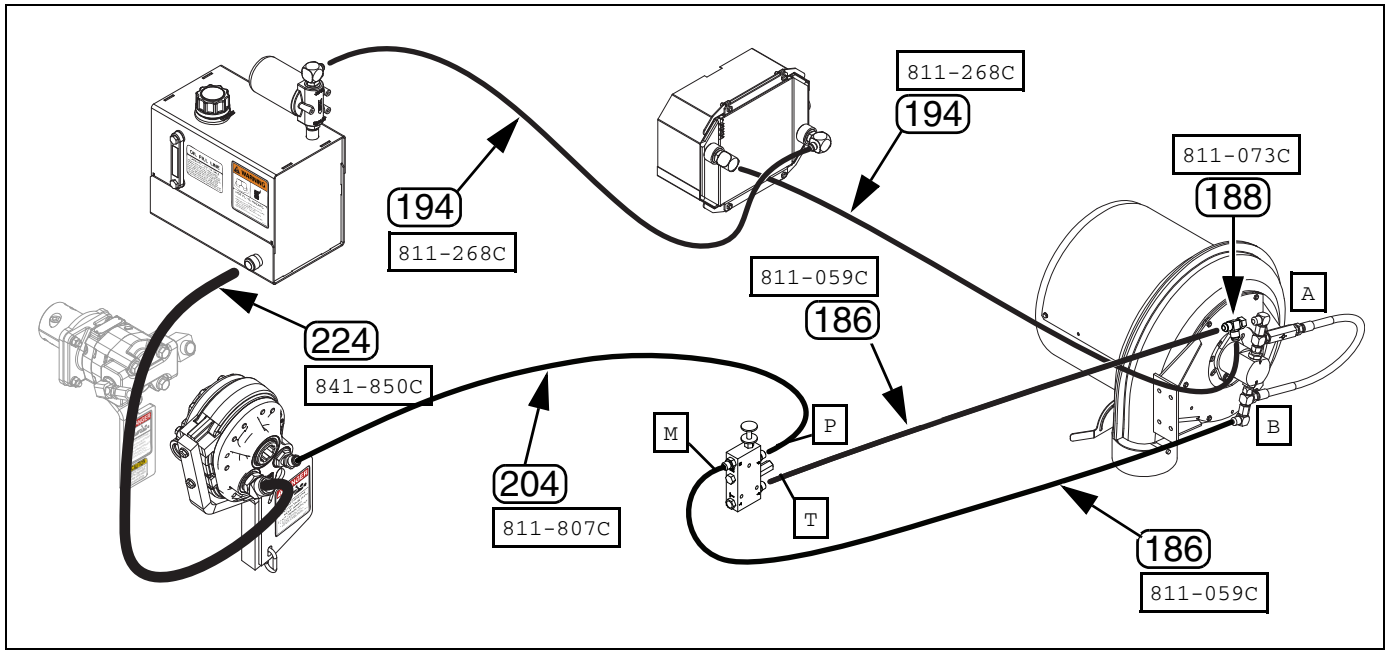

Figure 64:
401-848A and 411-166A Hydraulic Hose Routing

34674A
36312

401-848A and 411-166A Hydraulic Connections	Hose Identification		
	Callout	Hose	Hose Description
Reservoir Outlet to Pump Inlet	224	841-850C	HH1R4 198 1 5/16FJIC
Pump Outlet to Valve Port P	204	811-807C	HH1/2R2 120 3/4FJIC
Valve Port M to Fan Motor Inlet B	186	811-059C	HH1/2R2 080 3/4FJIC
Tee at Fan Motor Outlet A	188	811-073C	TE 3/4MJIC 3/4MJIC 3/4FJIC
Valve Port T to Fan Motor Tee	186	811-059C	HH1/2R2 080 3/4FJIC
Fan Motor Tee to Cooler Inlet	194	811-268C	HH1/2R2 048 3/4FJIC
Cooler Outlet to Oil Filter	194	811-268C	HH1/2R2 048 3/4FJIC

401-849A and 411-167A Flow Control Hydraulics

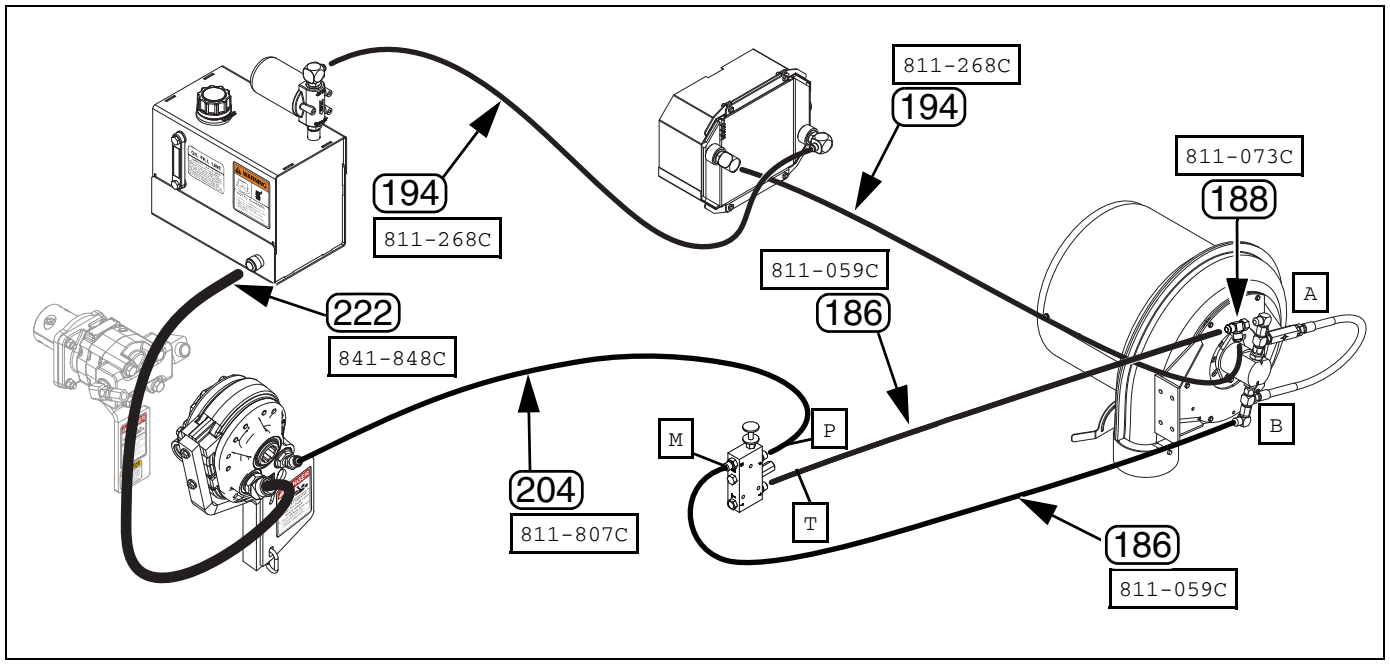

Figure 65:
401-849A and 411-167A Hydraulic Hose Routing

34675
36312

401-849A and 411-167A Hydraulic Connections	Hose Identification		
	Callout	Hose	Hose Description
Reservoir Outlet to Pump Inlet	222	841-848C	HH1R4 144 1 5/16FJIC
Pump Outlet to Valve Port P	204	811-807C	HH1/2R2 120 3/4FJIC
Valve Port M to Fan Motor Inlet B	186	811-059C	HH1/2R2 080 3/4FJIC
Tee at Fan Motor Outlet A	188	811-073C	TE 3/4MJIC 3/4MJIC 3/4FJIC
Valve Port T to Fan Motor Tee	186	811-059C	HH1/2R2 080 3/4FJIC
Fan Motor Tee to Cooler Inlet	194	811-268C	HH1/2R2 048 3/4FJIC
Cooler Outlet to Oil Filter	194	811-268C	HH1/2R2 048 3/4FJIC

401-879A and 411-168A Flow Control Hydraulics

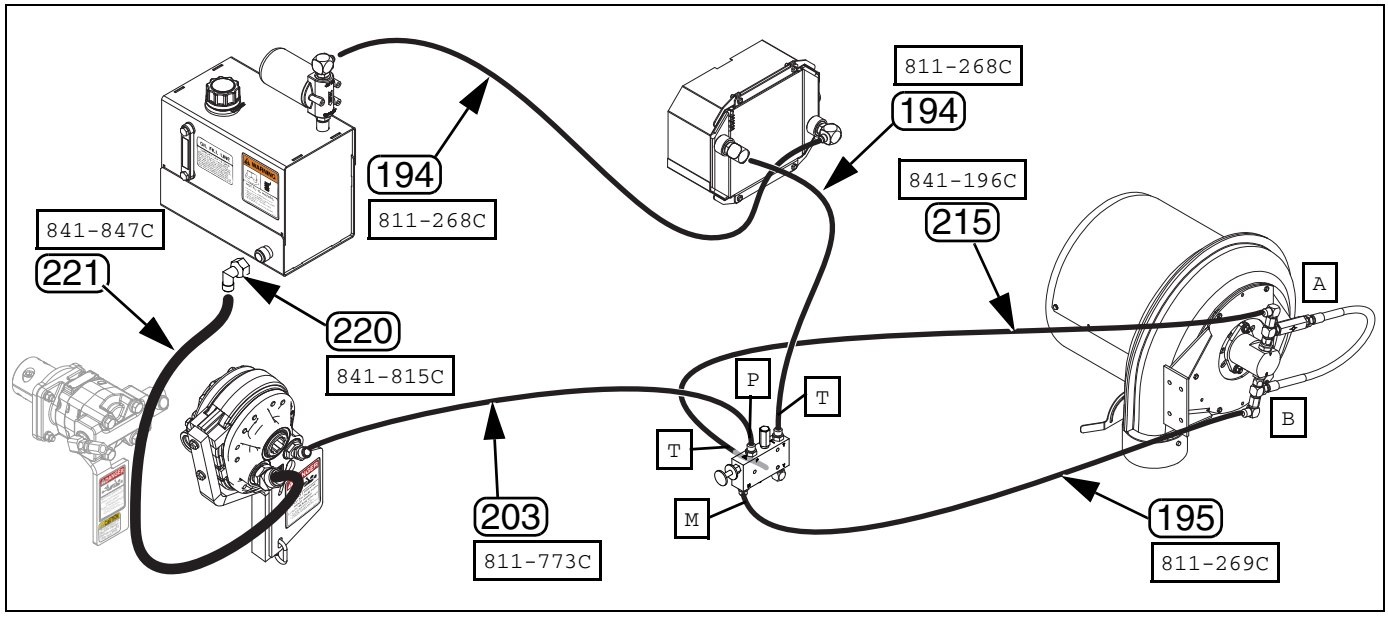

Figure 66:
401-879A and 411-168A Hydraulic Hose Routing

34669A
36312

401-879A and 411-168A Hydraulic Connections	Hose Identification		
	Callout	Hose	Hose Description
Elbow at Reservoir Outlet	220	841-815C	EL 1 5/16FJIC 1 5/16MJIC
Reservoir Outlet to Pump Inlet	221	841-847C	HH1R4 90 1 5/16FJIC
Pump Outlet to Valve Port P	203	811-773C	HH1/2R2 066 3/4FJIC
Valve Port M to Fan Motor Inlet B	195	811-269C	HH1/2R2 036 3/4FJIC
Fan Motor Outlet A to Valve Port T	215	841-196C	HH1/2R2 024 3/4FJIC
Valve Port T to Cooler Inlet	194	811-268C	HH1/2R2 048 3/4FJIC
Cooler Outlet to Oil Filter	194	811-268C	HH1/2R2 048 3/4FJIC

Continue at “**Charge and Test**” on page 62.

411-016A Flow Control Hydraulics

Refer to Figure 67

98. Select one new:
    191 811-147C CR 3/4MJIC

    At the fan return line, remove one:
    36 811-079C TE 3/4FJIC 3/4MJIC 3/4MJIC

    Replace the tee 36 with the cross 191.

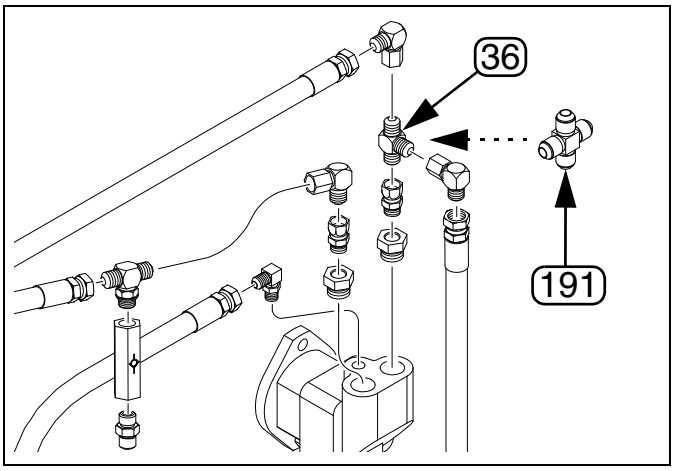

Figure 67:
2025A/2525A Fan Fittings
29781

Connect Hoses

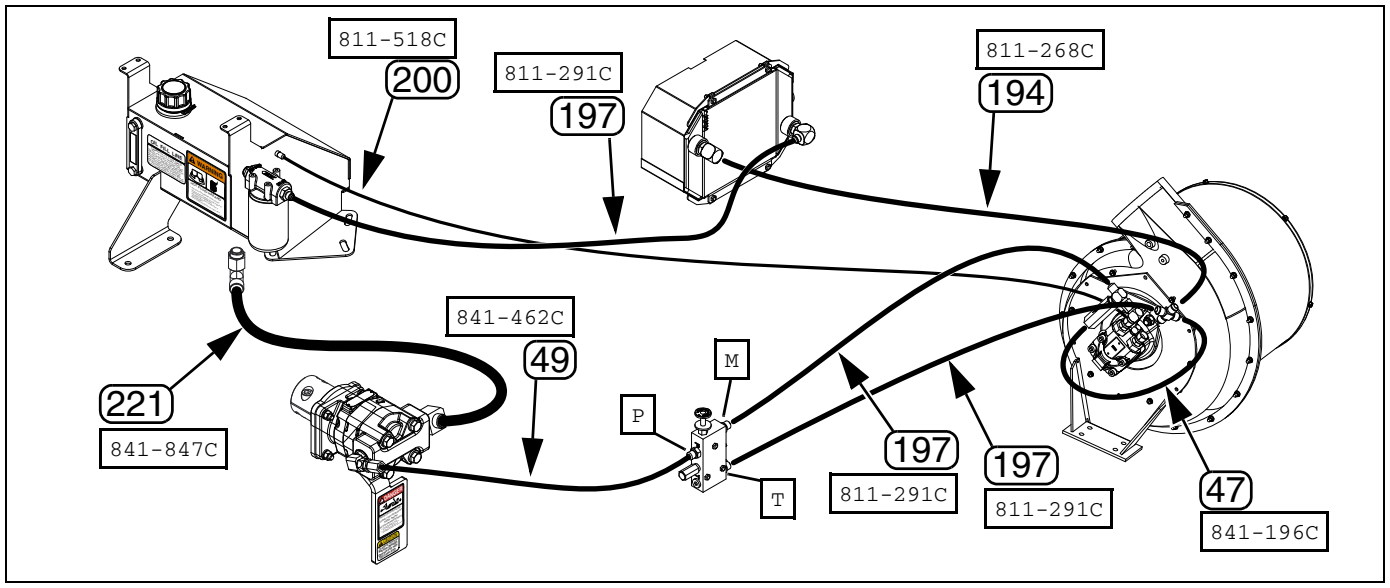

Figure 68:
411-016A Hydraulic Hose Routing
36307

401-879A Hydraulic Connections	Hose Identification		
	Callout	Hose	Hose Description
Reservoir Outlet to Pump Inlet	221	841-847C	HH1R4 90 1 5/16FJIC
Pump Outlet to Valve Port P	49	841-462C	HH1/2 R2 114 3/4FJIC 3/4MORB
Valve Port M to Fan Motor Inlet at Check Valve	197	811-291C	HH1/2R2 072 3/4FJIC
Fan Motor Outlet at Tee to Valve Port T	197	811-291C	HH1/2R2 072 3/4FJIC
Fan Motor Outlet at Tee to Cooler Inlet	194	811-268C	HH1/2R2 048 3/4FJIC
Cooler Outlet to Oil Filter	197	811-291C	HH1/2R2 072 3/4FJIC
Fan Motor Case Drain to Reservoir	200	811-518C	HH1/4R1 070 9/16FJIC
Fan Motor Bypass Loop	47	841-196C	HH1/2R2 024 3/4FJIC

Continue at “**Charge and Test**” on page 62.

411-035A and 411-036A Flow Control Hydraulics

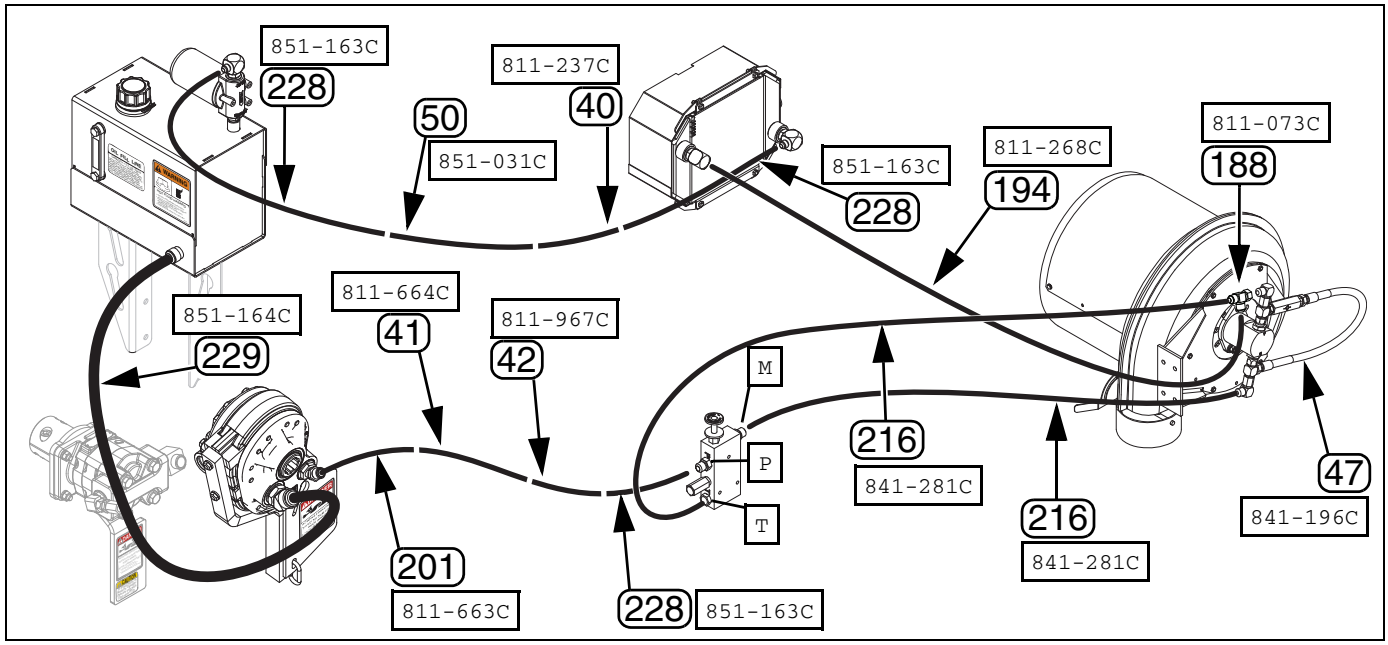

Figure 69:
411-035A and 411-036A Hydraulic Hose Routing

36309
36312

411-035A and 411-036A Hydraulic Connections	Hose Identification			
	Callout	Hose	Hose Description	Status
Reservoir Outlet to Pump Inlet	229	851-164C	HH1R4 60 1 5/8FJIC	New
Pump Outlet to Pivot Pressure Hose	201	811-663C	HH3/8R2 225 3/4FJIC	New
Pivot Pressure Hose to Riser Pressure Hose	41	811-664C	HH3/8R2 38 3/4FJIC	Left in place
Riser Pressure Hose to Valve Port P	42	811-967C	HH3/8R2 185 3/4FJIC	Left in place
Valve Port M to Motor Inlet Elbow	216	841-281C	HH3/8R2 96 3/4FJIC	New
Valve Port T from Motor Outlet Tee	216	841-281C	HH3/8R2 96 3/4FJIC	New
Motor Outlet Tee to Cooler Inlet	194	811-268C	HH1/2R2 048 3/4FJIC	New
Cooler Outlet to Return Riser Hose	228	851-163C	HH3/8R2 045 3/4FJIC MJIC	New
Return Riser Hose to Return Pivot Hose	40	811-237C	HH3/8R2 174 3/4FJIC	Left in place
Return Pivot Hose to Reservoir Return Hose	50	851-031C	HH3/8R2 041 3/4FJIC	Left in place
Reservoir Return Hose to Reservoir Inlet	228	851-163C	HH3/8R2 045 3/4FJIC MJIC	New
Motor Bypass Loop	47	841-196C	HH1/2R2 024 3/4FJIC	Left in place

Continue at “**Charge and Test**” on page 62.

411-037A and 411-038A Flow Control Hydraulics

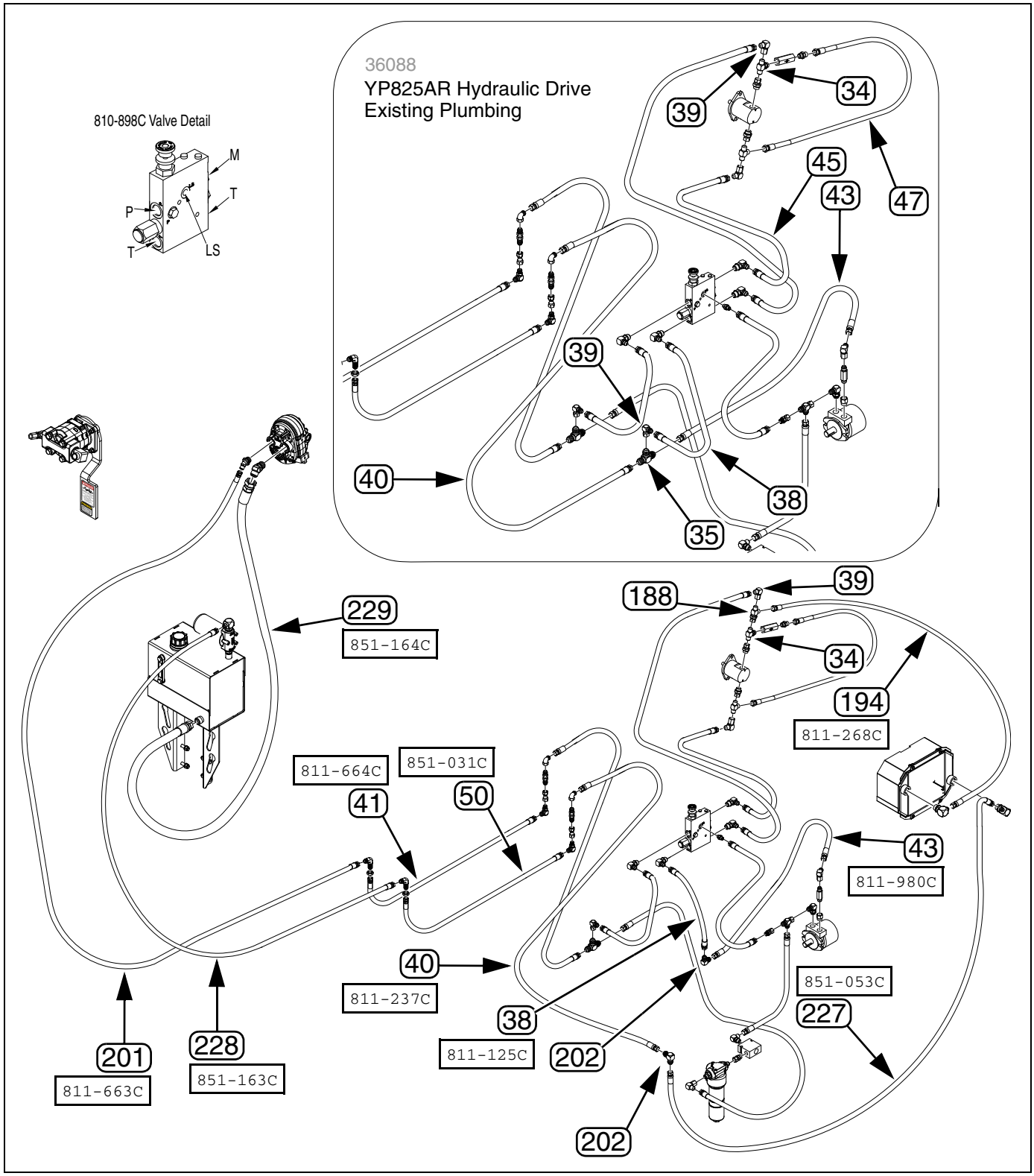

Figure 70:
411-037A and 411-038A Hydraulic Hose Routing

Replace/Add Fittings

99. Select one new:
    (188) 811-073C TE 3/4MJIC 3/4MJIC 3/4FJIC

Refer to Figure 70 on page 60

100. At the fan return line, disconnect:
    (34) 811-077C TE 3/4MORB 3/4MJIC 3/4MJIC
    (39) 811-150C EL 3/4FJIC 3/4MJIC

    Insert the tee (188) at this connection.

101. Select one new:
    (202) 811-725C EL 90 3/4MJIC

Refer to Figure 70 on page 60

102. Locate the existing tee (35) that connects the return line riser hose (40) to the hydraulic drive motor return hose (43) and one of the valve port T hoses (38).

    Remove that tee (35). It is not re-used.

    Use a new elbow (202) to connect the hydraulic drive motor return hose (43) and the valve port T hose (38).

103. Select one each new:
    (202) 811-725C EL 90 3/4MJIC
    (227) 851-053C HH3/8R2 046 3/4FJIC

    Use the elbow (202) to connect the hose (227) to the existing return riser hose (40), and the cooler outlet.

Connect Remaining Hoses

Only hoses that are added, removed or disturbed are identified.

411-037A and 411-038A Hydraulic Connections	Part Identification			Status
	Callout	Part	Part Description	
Pump Outlet to Pivot Pressure Hose	(201)	811-663C	HH3/8R2 225 3/4FJIC	New
Pivot Pressure Hose to Riser Pressure Hose	(41)	811-664C	HH3/8R2 38 3/4FJIC	Left in place
Valve Port T to Motor Return Elbow	(38)	811-125C	HH3/8R2 082 3/4FJIC	Re-connect
New Drive Motor Return Elbow	(202)	811-725C	EL 90 3/4MJIC	New
Drive Motor Return Hose to New Elbow	(43)	811-980C	HH3/8R2 047 3/4FJIC	Re-connect
Second Fan Motor Outlet Tee	(188)	811-073C	TE 3/4MJIC 3/4MJIC 3/4FJIC	New
Motor Outlet Tee to Cooler Inlet	(194)	811-268C	HH1/2R2 048 3/4FJIC	New
Cooler Outlet to Return Riser Hose Elbow	(227)	851-053C	HH3/8R2 046 3/4FJIC	New
New Return Riser Elbow	(202)	811-725C	EL 90 3/4MJIC	New
Return Riser Hose to Return Pivot Hose	(40)	811-237C	HH3/8R2 174 3/4FJIC	Left in place
Return Pivot Hose to Reservoir Return Hose	(50)	851-031C	HH3/8R2 041 3/4FJIC	Left in place
Reservoir Return Hose to Reservoir Inlet	(228)	851-163C	HH3/8R2 045 3/4FJIC MJIC	New
Reservoir Outlet to Pump Inlet	(229)	851-164C	HH1R4 60 1 5/8FJIC	New

Continue at "**Charge and Test**" on page 62.

Charge and Test

104. Fill the system per “**Oil Fill**” on page 22.

105. Operate the system, performing an initial valve adjustment if possible. See “**PTO Operation**” on page 8.

Close-Out

106. Remove any part numbering tags or grease pencil markings.

Appendix R - Reference

Torque Values

Bolt Size	Bolt Head Identification: Grade 2		Grade 5		Grade 8	
in-tpi[a]	N-m[b]	ft-lb[d]	N-m	ft-lb	N-m	ft-lb
1/4-20	7.4	5.6	11	8	16	12
1/4-28	8.5	6	13	10	18	14
5/16-18	15	11	24	17	33	25
5/16-24	17	13	26	19	37	27
3/8-16	27	20	42	31	59	44
3/8-24	31	22	47	35	67	49
7/16-14	43	32	67	49	95	70
7/16-20	49	36	75	55	105	78
1/2-13	66	49	105	76	145	105
1/2-20	75	55	115	85	165	120
9/16-12	95	70	150	110	210	155
9/16-18	105	79	165	120	235	170
5/8-11	130	97	205	150	285	210
5/8-18	150	110	230	170	325	240
3/4-10	235	170	360	265	510	375
3/4-16	260	190	405	295	570	420
7/8-9	225	165	585	430	820	605
7/8-14	250	185	640	475	905	670
1-8	340	250	875	645	1230	910
1-12	370	275	955	705	1350	995
1 1/8-7	480	355	1080	795	1750	1290
1 1/8-12	540	395	1210	890	1960	1440
1 1/4-7	680	500	1520	1120	2460	1820
1 1/4-12	750	555	1680	1240	2730	2010
1 3/8-6	890	655	1990	1470	3230	2380
1 3/8-12	1010	745	2270	1670	3680	2710
1 1/2-6	1180	870	2640	1950	4290	3160
1 1/2-12	1330	980	2970	2190	4820	3560

Bolt Size	Bolt Head Identification: 5.8 Class 5.8		8.8 Class 8.8		10.9 Class 10.9	
mm x pitch[c]	N-m	ft-lb	N-m	ft-lb	N-m	ft-lb
M 5 X 0.8	4	3	6	5	9	7
M 6 X 1	7	5	11	8	15	11
M 8 X 1.25	17	12	26	19	36	27
M 8 X 1	18	13	28	21	39	29
M10 X 1.5	33	24	52	39	72	53
M10 X 0.75	39	29	61	45	85	62
M12 X 1.75	58	42	91	67	125	93
M12 X 1.5	60	44	95	70	130	97
M12 X 1	90	66	105	77	145	105
M14 X 2	92	68	145	105	200	150
M14 X 1.5	99	73	155	115	215	160
M16 X 2	145	105	225	165	315	230
M16 X 1.5	155	115	240	180	335	245
M18 X 2.5	195	145	310	230	405	300
M18 X 1.5	220	165	350	260	485	355
M20 X 2.5	280	205	440	325	610	450
M20 X 1.5	310	230	650	480	900	665
M24 X 3	480	355	760	560	1050	780
M24 X 2	525	390	830	610	1150	845
M30 X 3.5	960	705	1510	1120	2100	1550
M30 X 2	1060	785	1680	1240	2320	1710
M36 X 3.5	1730	1270	2650	1950	3660	2700
M36 X 2	1880	1380	2960	2190	4100	3220

a. in-tpi = nominal thread diameter in inches-threads per inch
b. N· m = newton-meters
c. mm x pitch = nominal thread diameter in mm x thread pitch
d. ft-lb = foot pounds

Torque tolerance + 0%, -15% of torquing values. Unless otherwise specified use torque values listed above. 25199

Hydraulic Fitting Torque

Connector Identification

Refer to Figure 71 (a hypothetical fitting)

Leave any protective caps in place until immediately prior to making a connection.

① **NPT** - National Pipe Thread
Note tapered threads, no cone/flare, and no O-ring. Apply liquid pipe sealant for hydraulic applications (do not use tape sealant, which can foul filters).

② **JIC** - Joint Industry Conference (SAE J514)
Note straight threads ④ and the 37· cone ⑤ on “M” fittings (or 37· flare on “F” fittings). Use no sealants (tape or liquid) on JIC fittings.

③ **ORB** - O-ring Boss (SAE J514)
Note straight threads ⑤ and elastomer O-ring ⑦. Prior to installation, to prevent abrasion during tightening, lubricate O-ring with clean hydraulic fluid. Use no sealants (tape or liquid) on JIC fittings.
ORB fittings that need orientation, such as the ell depicted, also have a washer ⑧ and jam nut ⑨ (“adjustable thread port stud”). Back jam nut away from washer. Thread fitting into receptacle until O-ring contacts seat. Unscrew fitting to desired orientation. Tighten jam nut to torque specification.

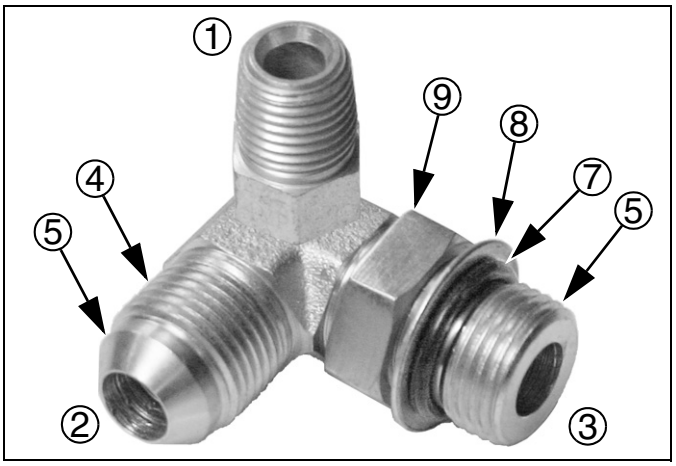

Figure 71: 31282
Hydraulic Connector ID

Fittings Torque Values

Fitting	Ft-Lbs	N-m
1/4 NPT	1.5-3.0 turns past finger tight	
9/16 JIC	18-20	24-27
9/16 ORB w/jam nut	12-16	16-22
9/16 ORB straight	18-24	24-32
3/4 JIC	27-39	37-53
3/4 ORB w/jam nut	20-30	27-41
3/4 ORB straight	27-43	37-58

Abbreviations

3PT	Three Point (hitch)
8RW	Eight Row
AD	Adaptor
ASABE	American Society of Agricultural and Biological Engineers
ASAE	American Society of Agricultural Engineers
ASSY	Assembly
BRKT	Bracket
CI	Cubic Inches
cm	Centimeters
CNTRL	Control
CR	Cross
DJ	DICKEY-john®
EL	Elbow
FERT	Fertilizer
FJIC	Female JIC
FL	Flow
FLG	Flanged
FORB	Female ORB
GAL	Gallon
GD	Ground Drive
Gnd	Ground
GR5,8	Grade 5, Grade 8
Gspd	Ground Speed
H2O	Water
HEX	Hexagonal
HH	Hydraulic Hose
HHCS	Hex Head Cap Screw
hp	Horsepower
HYD	Hydraulic
IMPL	Implement
in., IN	Inch
INST	Installation
JA	Bushing size
JIC	Joint Industry Conference
kW	Kilowatts
LB PTO	Linear Box PTO
LH	Left Hand
LIQ	Liquid
MAN	Manual
MJIC	Male JIC
mm, MM	Millimeter
MNT	Mount
MORB	Male ORB
MORB	Male ORB
MPH	Miles Per Hour
N-m	Newton-meters
ORB	R-Ring Boss
ORBF	FORB
PL	Plug
PLNTR	Planter
PLT	Plated or Plate
PTO	Power Take-Off
QD	Quick Disconnect
RES	Reservoir
REV	Revolution
RH	Right Hand
RPM	Revolutions Per Minute
RW	
SAE	Society of Automotive Engineers (standard)
SQ	Square
SUS	Saybolt Universal Seconds
TE	Tee
USS	United States Standard
W, W/	with
WLDMNT	Weldment
X	by
YP	Yield-Pro®
ZNYCR	Zinc Chromate

Parts Lists

Kits and This Manual

Call-out	Part Number	Part Description
101	401-885M	MAN INST/OPERATE PTO IMPL PUMP
103	401-845A	YP4-6-8 PTO 540 3PT ASSY
105	401-846A	YP4-6-8 PTO 540 NO FERT PULL
107	401-847A	YP4-6-8 PTO 540 DRY FERT ASSY
109	401-848A	YP4 PTO 540 LIQ FERT ASSY
111	401-849A	YP6-8 PTO 540 LIQ FERT ASSY
113	401-879A	YP8RW 3PT PTO 540 ASSY
115	401-956A	YP4,6,8 FAN UPDATE
117	411-016A	20A,25A PTO PUMP KIT

Call-out	Part Number	Part Description
102	411-035A	YP825R PTO HYD PUMP GND DV 540
104	411-036A	YP825R PTO HYD PUMP GND DV1000
106	411-037A	YP825R PTO HYD PUMP HYD DV 540
108	411-038A	YP825R PTO HYD PUMP HYD DV1000
110	411-163A	YP4-6-8 PTO 1000 3PT ASSY
112	411-164A	YP4-6-8 PTO 1000 NO FERT PULL
114	411-165A	YP4-6-8 PTO 1000 DRY FERT ASSY
116	411-166A	YP4 PTO 1000 LIQ FERT ASSY
118	411-167A	YP6-8 PTO 1000 LIQ FERT ASSY
119	411-168A	YP8RW 3PT PTO 1000 ASSY

New Parts in Kits

Call -out	Part Number	Part Description
120	168-094D	HYD MOTOR 1/8 KEY
121	401-833L	6IN HYD FAN COOLER ASSY
122	401-834H	6 IN HYD FAN SHROUD
123	401-835L	4,6,8 PTO HYD PUMP ASSEMBLY
124	401-835S	RIGID PLNTR HYD FL CNTRL ASSY
125	401-836H	PTO PUMP TORQUE ARM WLDMNT
126	401-837K	FERT FRAME FLOW CONTROL ASSY
127	401-839H	HYD RES ROW UNIT MNT WLDMNT
128	401-840H	HYD RES FERT FRAME MNT WLDMNT
129	401-841S	HYD RES TANK ASSY
130	401-842L	HYD RES W/ FILTER ASSY
131	401-843S	HYD RES FERT FRAME MNT ASSY
132	401-844L	6 8 FERT HYD RES W/ FILTER
133	401-850V	HOSE BUNDLE PTO PUMP 401-845A
134	401-851V	HOSE BUNDLE PTO PUMP 401-846A
135	401-852V	HOSE BUNDLE PTO PUMP 401-847A
136	401-853V	HOSE BUNDLE PTO PUMP 401-848A
137	401-854V	HOSE BUNDLE PTO PUMP 401-849A
138	401-876H	3PT 8 ROW WIDE HYD RES WLDMNT
139	401-877S	3PT 8 ROW WIDE HYD RES ASSY
140	401-878L	3PT 8 ROW WIDE HYD RES W/FLTR
141	411-017L	LB PTO TANK
142	411-018L	LB FLOW CONTROL ASSY
143	411-019V	LB PTO HOSE BUNDLE
144	411-029H	LINEAR BOX PTO TANK
145	411-030L	YP825R PTO HYD PUMP ASSEMBLY

Call -out	Part Number	Part Description
146	411-031K	YP825R FLOW CONTROL ASSY
147	411-032V	HOSE BUNDLE PTO PUMP YP825R GD
148	411-039L	825R HYD TANK RES ASSY
149	411-040S	825R HYD TANK RES SUB ASSY
150	411-041S	LB PTO TANK BASE ASSY
151	411-042V	HOSE BUNDLE PTO PUMP YP825R HD
152	411-056H	825R HYD TANK RES WLDMNT
153	411-062L	HYD PUMP ASSY 3.19 1 5/16MJIC
154	411-824D	FLOW CONTROL MNT PLT NO FERT
155	411-825D	FLOW CONTROL MNT PLT FERT
156	421-166D	PTO PUMP TORQUE PLT
157	421-219D	LB PTO PUMP CONTROL MNT
158	421-300D	FLOW CONTROL MNT PLATE
159	800-120C	NUT CLIP U-TYPE 5/16-18
160	802-022C	HHCS 3/8-16X1 1/2 GR5
161	802-047C	HHCS 1/2-13X6 GR5
162	802-105C	HHCS 5/8-11X9 GR5
163	802-128C	HHCS 1/2-13X2 GR5
164	802-138C	HHCS 5/16-18X2 1/4 GR5
165	802-159C	HHCS 5/16-18X1 GR5
166	802-377C	HHCS 1/2-13X7 1/2 GR5
167	803-008C	NUT HEX 5/16-18 PLT
168	803-014C	NUT HEX 3/8-16 PLT
169	803-020C	NUT HEX 1/2-13 PLT
170	803-021C	NUT HEX 5/8-11 PLT
171	804-009C	WASHER LOCK SPRING 5/16 PLT

Call -out	Part Number	Part Description
172	804-013C	WASHER LOCK SPRING 3/8 PLT
173	804-015C	WASHER LOCK SPRING 1/2 PLT
174	804-016C	WASHER FLAT 1/2 SAE PLT
175	804-022C	WASHER LOCK SPRING 5/8 PLT
176	806-144C	U-BOLT 1/2-13 X 3 1/32 X 3
177	806-150C	U-BOLT 3/8-16 X 7 1/32 X 6 GR5
178	806-159C	U-BOLT 1/2-13 X 5 1/32 X 4 1/2
179	806-165C	U-BOLT 3/8-16 X 5 1/32 X 4 1/4
180	810-273C	HYD MOTOR 7/8ORBF
181	810-804C	C12 HYD OIL COOLER
182	810-813C	PRESSURE FLOW CONTROL VALVE
183	810-897C	HYD PUMP PARKER 350C 3.19CIR
184	810-901C	SEAL KIT, HYD PUMP PARKER 350C
185	810-904C	SEAL KIT 831-101C
186	811-059C	HH1/2R2 080 3/4FJIC
187	811-063C	EL 3/4MJIC 3/4MORB
188	811-073C	TE 3/4MJIC 3/4MJIC 3/4FJIC
189	811-088C	AD 3/4MORB 3/4MJIC
190	811-091C	EL 3/4MJIC 1 1/16MORB
191	811-147C	CR 3/4MJIC
192	811-203C	PL 3/4MORB HOLLOW HEX
193	811-205C	AD 3/4MJIC 1 1/16MORB
194	811-268C	HH1/2R2 048 3/4FJIC
195	811-269C	HH1/2R2 036 3/4FJIC
196	811-279C	HH1/2R2 060 3/4FJIC
197	811-291C	HH1/2R2 072 3/4FJIC
198	811-488C	AD 3/4FORB 3/4FORB
199	811-502C	AD 7/8MORB 3/4FJIC
200	811-518C	HH1/4R1 070 9/16FJIC
201	811-663C	HH3/8R2 225 3/4FJIC
202	811-725C	EL 90 3/4MJIC
203	811-773C	HH1/2R2 066 3/4FJIC
204	811-807C	HH1/2R2 120 3/4FJIC
205	811-857C	PL 3/4MORB
206	811-967C	HH3/8R2 185 3/4FJIC
207	818-130C	DECAL CAUTION 540 RPM
208	818-240C	DECAL CAUTION 1000 RPM
209	818-619C	DECAL HYD VALVE KNOB ADJUSTMNT
210	826-777C	1 3/4-20 PTO COUPLER
211	826-778C	1 3/8-21 PTO COUPLER
212	831-101C	PTO PUMP 3.6 CI/REV.
213	831-111C	PTO PUMP 5.7 CI/REV.
214	841-003C	HH3/8R2 105 3/4FJIC
215	841-196C	HH1/2R2 024 3/4FJIC
216	841-281C	HH3/8R2 96 3/4FJIC
217	841-556C	HH1/2R2 144 3/4FJIC
218	841-653C	EL 45 1 5/16MORB 1 5/16MJIC
219	841-814C	EL 45 3/4MJIC 1 1/16MORB
220	841-815C	EL 1 5/16FJIC 1 5/16MJIC
221	841-847C	HH1R4 90 1 5/16FJIC
222	841-848C	HH1R4 144 1 5/16FJIC
223	841-849C	HH1R4 168 1 5/16FJIC
224	841-850C	HH1R4 198 1 5/16FJIC
225	841-919C	AD 7/8FJIC 3/4MORB
226	841-975C	EL 1 5/16MORB 7/8MJIC
227	851-053C	HH3/8R2 046 3/4FJIC
228	851-163C	HH3/8R2 045 3/4FJIC MJIC
229	851-164C	HH1R4 60 1 5/8FJIC
230	851-207C	EL 1 5/8MORB 1 5/16MJIC
231	858-003C	DECAL 5.5GAL OIL FILL LINE
232	858-004C	DECAL HOT FLUID PTO RES
233	858-005C	DECAL DANGER PTO PUMP
234	890-396C	BUSHING - FAN
235	890-892C	HYDRAULIC MOTOR MOUNT PLT
236	891-109C	FILTER HEAD
237	891-110C	FILTER ELEMENT SPIN ON
238	891-313C	CHAIN WELD 1/4 GR 43 X 24 LINK
239	891-314C	1/4 CHAIN THREADED LINK
240	891-315C	5IN HYD SIGHT LEVEL GAUGE
241	891-316C	HYD FILL CAP WITH SCREEN
242	NPN	HHCS #10-24x1 INCH GRADE 8 FULL THREAD
243	NPN	3/8-16X1/2 SOCKET HEAD SET SCREW
244	NPN	5/16-18X3/8 SOCKET HEAD SET SCREW

Existing Parts Affected

Call-out	Part Number	Part Description	Part Disposition
11	<none>	HHCS #10-24x1 INCH GRADE 8 FULL THREAD	Removed. Not re-used if motor replaced.
12	17089	13 FAN IMPELLER	Removed and re-installed.
13	21121	6 FAN HOUSING RH SIDE	
14	23320	6 FAN HOUSING LH SIDE	
15	23907	HUB/MOTOR PLATE SEAL (2B)	If removed, not re-used.
16	401-203H	YP FAN MOUNT WLDMNT 2	
17	401-537D	DJ FAN SENSOR MOUNT BRKT	If present, removed and re-installed.
18	401-656H	FAN MOUNT WELDMENT	
19	800-373C	SQ KEY 6MM X 35MM	If removed, not re-used.
20	801-081C	SCREW HEX SELF TAP 1/4-20X3/4	Removed and re-installed.
21	802-005C	HHCS 1/4-20X1 GR5	Removed and re-installed.
22	802-079C	HHCS 3/8-16X1 1/4 GR5	Removed and re-installed.
23	802-167C	HHCS 1/4-20X1 1/2 GR5	Removed and re-installed.
24	802-224C	HHCS 1/4-20X1 1/4 GR5	Removed and re-installed.
25	803-014C	NUT HEX 3/8-16 PLT	Removed and re-installed.
26	803-230C	NUT HEX FLANGE 1/4-20 PLT	Removed and re-installed.
27	803-360C	NUT HEX FLG 3/8-16 GR8 ZNYCR	Removed and re-installed.
28	804-006C	WASHER LOCK SPRING 1/4 PLT	Removed and re-installed.
29	804-011C	WASHER FLAT 3/8 USS PLT	Removed and re-installed.
30	804-013C	WASHER LOCK SPRING 3/8 PLT	Removed and re-installed.
31	804-075C	WASHER FLAT 1/4 USS PLT	Removed and re-installed.
32	810-037C	VALVE LINE CHECK	Removed and re-installed.
33	810-556C	PARKER F-11 FAN MOTOR	If removed, not re-used.
34	811-077C	TE 3/4MORB 3/4MJIC 3/4MJIC	If removed, re-installed.
35	811-078C	TE 3/4MJIC	If removed, not re-used.
36	811-079C	TE 3/4FJIC 3/4MJIC 3/4MJIC	Removed and not re-used.
37	811-088C	AD 3/4MORB 3/4MJIC	If removed, re-installed.
38	811-125C	HH3/8R2 082 3/4FJIC	Left in place.
39	811-150C	EL 3/4FJIC 3/4MJIC	If removed, re-installed.
40	811-237C	HH3/8R2 174 3/4FJIC	Status depends on kit.
41	811-664C	HH3/8R2 38 3/4FJIC	Left in place.
42	811-967C	HH3/8R2 185 3/4FJIC	Status depends on kit.
43	811-980C	HH3/8R2 047 3/4FJIC	One end re-connected.
44	817-624C	FAN INLET RAIN SHIELD	If removed, not re-used.
45	841-006C	HH3/8R2 087 3/4FJIC	One end re-connected.
46	841-042C	HH3/8R2 249 3/4MORB 3/4FJIC	One end re-connected.
47	841-196C	HH1/2R2 024 3/4FJIC	If removed, re-installed.
48	841-461C	HH1/4 R2 114 9/16 FJIC 9/16MOR	Removed and not re-used.
49	841-462C	HH1/2 R2 114 3/4FJIC 3/4MORB	Two removed. One re-used.
50	851-031C	HH3/8R2 041 3/4FJIC	Left in place.
51	890-624C	SCREEN FAN COVER	Removed and re-installed.
52	890-891C	BUSHING, JA X 20 MM	If removed, not re-used.
53	890-899C	VOLVO HYD MOTOR MOUNT PLT	If removed, not re-used.

Index

A
abbreviation 65
acceleration, sudden 15
adaptor 2
Air-Pro® 9
alert symbol, PTO 1
anchor point 8
ASABE 8, 9
ASAE 8, 9
B
butterfly valve 17
C
callouts 7, 27
capacity, oil 6, 23
capacity, system 22
CAUTION, defined 1
chain 11, 12
check for leaks 15
clearance, PTO pump 8, 9, 10
clevis 8, 9, 10
closed center 6
closeout 62
clothing 2
compatibility 25
cooler, oil 6
coulters 27
coupler 2
cross-bolt 12
customer service 7
D
DANGER, defined 1
decal replacement 4
decals
caution
540 RPM PTO 5
danger
rotating driveline 4
warning
hot fluid 4
decal, safety 4
DICKEY-john® 19
Document Family 6
drain plug 22
drawbar adjustment 11, 13
drawbar clearance 8, 9, 10
driveline 2
dry fertilizer 26
E
entanglement 1
existing parts 68
extender 2
F
fan update kit 25
fertilizer sub-frame 27
fill level 14
filler cap 22
filter change 22
filter, oil 23
fire 3
flailing 1
Fleetguard 23
flow control valve 6, 15, 16
G
gearbox 2
ground clearance 8, 9, 10
Gspd Constant 19
H
hair 2
HC 9540S UJ4H, filter 23
HE-10, filter 23
HF6610, filter 23
high pressure fluid 1
high pressure fluids 3
hitching 11, 12
hoist 27
hose handle 40
hp 9
hydraulic connectors 64
hydraulic oil 22
hydraulic safety 3
I
independent 8, 9
independent PTO 2
inlet shutter 17
IntelliAg® 19
J
JIC 64
Joint Industry Conference 64
J514 64
K
keyhole 11, 12
knob 15, 18, 19
kW 9
L
lead, sensor 36
leak checks 15
left-hand (defined) 7
level 14
lift 27
liquid fertilizer 26
live 8, 9
live PTO 2
lock disc 15, 18, 19
lubrication 23
M
Magnehelic® 17
maintenance 23
maintenance safety 3
markers 27
master shield 2, 8, 9, 10
medical assistance 3
meter pressurization 17
N
National Pipe Thread 64
new parts 66
Note (defined) 7
Notice (defined) 7
NPT 64
O
oil 22
oil cooler 6
oil fill level 14
oil filter 22
oil reservoir 6
oil specification 22, 23
oil temperature 14, 22
oil, hydraulic 23
open center 6
options 27
ORB 64
order of installation 27
O-Ring Boss 64
P
Pall 23
part lists 66
pin 12
plug, drain 22
power, PTO 8, 9
pressurization, meter 17
PTO alert symbol 1
PTO pump 6
PTO safety 2
PTO speed 15
PTO troubleshooting 21
PTO, defined 6
pump 15
pump, PTO 6
Q
QD 40
R
rain cover 17
Range sprocket 17
reservoir, oil 6
right-hand (defined) 7
row cleaners 27

S

SAE J514 64
safety decal 4
safety symbol 1
scarf 2
scheduled maintenance 23
seed disk 17
seed, load 17
sensor lead 36
serial number 25
service 7
shaft diameter 8, 9
shaft, PTO 2
shutter, inlet 17
side PTO 2
sight gauge 14
slide gate 17
specification, oil 22
speed, PTO 15
spline 2, 8, 9
stub shaft 8, 9
sub-frame 27
sudden acceleration 15
support 7
SUS 22, 23
symbol, alert, PTO 1
symbol, safety 1
system capacity 22

T

tables
fittings torque 64
temperature, oil 14, 22
three-point 11
tongue 27
tools 27
torque arm 11, 13
torque values 63
Transmission sprocket 17
troubleshooting 21
Type 1 ..... 8, 9
Type 3 9

U

unhitching 20

W

WARNING, defined 1
wire 12

Y

YP425A 16, 25, 26
YP425A-0430 42
YP425A-0436 42
YP425A-0438 42
YP425A-0440 42
YP425A-0470 42
YP425A-08TR 42
YP425A-08TR36 42
YP425A-0838 42
YP425A-0840 42
YP425A3P 16, 25, 26
YP425A3P-0430 42
YP425A3P-0436 42
YP425A3P-0438 42
YP425A3P-0440 42
YP425A3P-0470 42
YP425A3P-08TR 42
YP425A3P-0836 42
YP425A3P-0838 42
YP425A3P-0840 42
YP625A 16, 25, 44
YP625A-0630 42
YP625A-0636 42
YP625A-0638 42
YP625A-0640 42
YP625A-0670 42
YP625A-12TR 42
YP625A-12TR36 42
YP625A-1238 42
YP625A-1240 42
YP625A3P 16, 25
YP625A3P-0630 42
YP625A3P-0636 42
YP625A3P-0638 42
YP625A3P-0640 42
YP625A3P-0670 42
YP625A3P-12TR 42
YP625A3P-1236 42
YP625A3P-1238 42
YP625A3P-1240 42
YP625TD 26
YP825A 16, 25, 26, 44
YP825AR 25, 26, 28, 47, 60
YP825A-0830 42
YP825A-0836 42
YP825A-0838 42
YP825A-0840 42
YP825A-0870 42
YP825A-16TR 42
YP825A-16TR36 42
YP825A-16TR38 42
YP825A-16TR40 42
YP825A3P 16, 25, 26
YP825A3P-0830 42
YP825A3P-0836 ..... 42, 45
YP825A3P-0838 ..... 42, 45
YP825A3P-0840 ..... 42, 45
YP825A3P-0870 42
YP825A3P-16TR 42
YP825A3P-1636 ..... 42, 45
YP825A3P-1638 ..... 42, 45
YP825A3P-1640 ..... 42, 45
YP925TD 26

Z

Zinga 23

Numerics

133-415M, manual 6
168-094D, key 34
2-port fan 25
2025A 16, 25, 46
23907, seal 32
2525A 16, 25, 46
3-point 11
3-port fan 25
401-537D, bracket 30, 36
401-651M, manual 6
401-652M, manual 6
401-652P, manual 6
401-833L, cooler asy 37
401-834H, shroud 37
401-835S, valve 49
401-837K, valve 49
401-842L, reservoir 42, 43
401-844L, reservoir 44
401-845A, kit ....6, 16, 26, 39, 41, 42, ... 48, 49, 52
401-846A, kit ....6, 16, 26, 41, 42, 48, ... 49, 52
401-847A, kit ....6, 16, 26, 39, 41, 42, ... 48, 49, 52
401-848A, kit ....6, 16, 26, 39, 41, 42, ... 48, 49, 52
401-849A, kit ....6, 16, 39, 41, 44, 48, ... 49, 52
401-878L, reservoir 45
401-879A, kit ....6, 16, 39, 41, 42, 45, ... 48, 49, 52
401-885M, manual 6
401-923B, manual 6
401-923M, manual 6
401-923P, manual 6
401-956A, fan update 40
401-956A, fan update kit 25
401-956A, kit 6, 29
411-016A, kit ....6, 16, 39, 41, 46, 48, ... 50, 52
411-017L, reservoir 46
411-017L, tank 46
411-018L, valve 50
411-031K, valve 51
411-035A, kit 6, 16, 39, 41, 47, 48, 52
411-036A, kit 6, 16, 39, 41, 47, 48, 52
411-037A, kit 6, 16, 39, 41, 47, 48, 52
411-038A, kit 6, 16, 39, 41, 47, 48, 52
411-039L, reservoir 47
411-163A, kit ....6, 16, 26, 39, 41, 42, ... 48, 49, 52
411-164A, kit ....6, 16, 26, 39, 41, 42, ... 48, 49, 52
411-165A, kit ....6, 16, 26, 39, 41, 42, ... 48, 49, 52
411-166A, kit 6, 16, 26, 39, 41, 42,

..... 48 , 49 , 52
411-167A, kit ....6 , 16 , 26 , 39 , 41 , 44 ,
..... 48 , 49 , 52
411-168A, kit ....6 , 16 , 26 , 39 , 41 , 45 ,
..... 48 , 49 , 52
800-373C, key 31
801-081C, screw ..... 32 , 33
802-005C, bolt .....30 , 35 , 36 , 37
802-047C, bolt 44
802-079C, bolt ..... 32 , 33
802-105C, bolt 43
802-128C, bolt 47
802-159C, bolt ..... 37 , 38
802-224C, bolt ..... 32 , 33
802-377C, bolt 45
803-014C, nut .....32 , 33 , 49 , 50 , 51
803-020C, nut .....44 , 45 , 46 , 47
803-021C, nut 43
803-360C, nut 49
804-006C, washer 30 , 32 , 33 , 35 , 36 ,
.....37
804-011C, washer ..... 32 , 33
804-013C, washer ...32 , 33 , 49 , 50 , 51
804-015C, washer .....44 , 45 , 46 , 47
804-016C, washer 46
804-022C, washer 43
804-075C, washer .....30 , 35 , 36 , 37
806-144C, U-bolt 46
806-150C, bolt ..... 49 , 51
806-159C, U-bolt 46
806-165C, U-bolt 50
810-037C, check valve ..... 31 , 35
810-273C, motor 33
810-556C, motor 32
810-804C, cooler ..... 37 , 38
811-059C, hose ..... 54 , 55 , 56
811-073C, tee .....54 , 55 , 56 , 61
811-077C, tee ..... 31 , 35 , 61
811-078C, tee ..... 31 , 35
811-079C, tee 58
811-088C, adaptor ..... 31 , 35
811-125C, hose 61
811-147C, cross 58
811-150C, elbow ..... 31 , 35 , 61
811-237C, hose ..... 59 , 61
811-268C, hose .... 39 , 52 , 53 , 54 , 55 ,
.....56 , 57 , 58 , 59 , 61
811-269C, hose .....39 , 52 , 53 , 57
811-291C, hose ..... 39 , 58
811-502C, adaptor 35
811-518C, hose 58
811-663C, hose ..... 59 , 61
811-664C, hose ..... 59 , 61
811-725C, elbow 61
811-773C, hose ..... 39 , 52 , 57
811-807C, hose ..... 54 , 55 , 56
811-967C, hose 59
811-980C, hose 61
818-130C, decal 5
818-230C, decal 5
826-777C, coupler .....2 , 7 , 12
826-778C, coupler .....2 , 7 , 12
841-196C, hose ....31 , 35 , 52 , 53 , 57 ,
.....58 , 59
841-281C, hose 59
841-462C, hose 58
841-556C, hose 53
841-815C, elbow .....52 , 54 , 57
841-847C, hose .....52 , 57 , 58
841-848C, hose .....53 , 56
841-849C, hose 54
841-850C, hose 55
851-031C, hose .....59 , 61
851-053C, hose .....39 , 61
851-163C, hose .....39 , 59 , 61
851-164C, hose .....59 , 61
858-003C, decal .....14 , 22
858-004C, decal 4
858-005C, decal 4
890-396C, bushing 34
890-624C, screen .....29 , 35 , 39
890-891C, bushing 31
890-892C, plate .....32 , 33
891-110C, filter 23

Great Plains, Mfg.
1525 E. North St.
P.O. Box 5060
Salina, KS 67402