Electro-Hydraulic Control Option

Great Plains 3-Point Sprayers

Used with:

- CF500 Cross-Fold Boom
- CF600 Cross-Fold Boom

When you see this symbol, the subsequent instructions and warnings are serious - follow without exception. Your life and the lives of others depend on it!

General Information

These instructions explain how to install the Electro-Hydraulic Control Option. The electric-hydraulic control supports powering the boom folding and elevator lift on the same hydraulic circuit, and control via cab switches. These instructions apply to an installation of:

Kit	Product Description
506-584A	ELEC/HYD KIT JOY STICK
506-585A	ELEC/HYD KIT SWITCH BOX

Manual Update

Refer to the CF500 and CF600 Operator manual for detailed information on safely operating, adjusting, troubleshooting and maintaining the electric-hydraulic control option. Refer to the parts manual for part identification.

Kit	Product Description
506-582M	CF500 and CF600 Operator's Manual
506-582P	CF500 and CF600 Parts Manual

Before You Start

Part lists are on page 7. Inventory parts received before installing.

Tools Required

- basic hand tools
- small amount of hydraulic fluid

Notations and Conventions

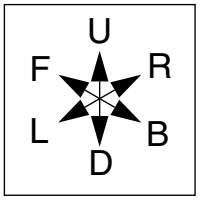

"Left" and "Right" are facing in the direction of machine travel. An orientation rose in the line art illustrations shows the directions of: Up, Back, Left, Down, Front, Right.

① to ⑨ callouts identify components in the currently referenced Figure or Figures.

⑪ to ㉗ callouts reference new parts from the list on page 7, and are consistent across all pages. Descriptions match the current Parts Manual.

Figure 1 28169
506-584A Joystick Kit

Figure 2 28170
506-585A Switchbox Kit

Assembly Instructions

Mount Tube Bracket

Refer to Figure 3

1. Select one each:
   ⑫ 506-357D C-SECTION NOZZLE TUBE BRACKET
   ⑱ 806-001C U-BOLT 3/8-16 X 2 X 4
   ⑳ 806-107C U-BOLT 5/16-18 X 1 17/32X2 1/8
   and two sets:
   ⑯ 803-068C NUT HEX FLANGE 3/8-16 PLT
   ⑰ 803-199C NUT HEX FLANGE 5/16-18 PLT

   Position mounting bracket ⑫ the same distance to left of center posts ③ as existing mounting bracket ④ is to right of posts.

   Use 3/8in hardware (⑱, ⑯) at boom frame, and 5/16in hardware (⑳, ⑰) at nozzle tube.

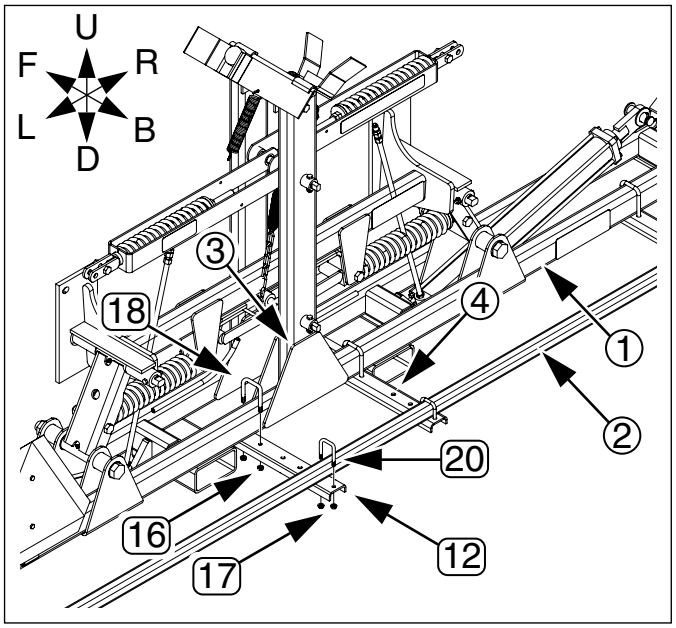

Figure 3 17525
Mounting Bracket

Prepare valve and Bracket

Refer to Figure 6

If the decal is already applied, skip to Step 3.

2. Select one each:
   ⑭ 510-022D FASSE VALVE BLOCK MTG PLATE
   ㉒ 818-339C DECAL WARNING HIGH PRESSUR SML

   Clean and dry the back side of the bracket ⑭. Peel the backing paper from the decal ㉒. With the bracket break up and away from you, position the decal at the upper left corner. Apply it. Smooth out any air bubbles by applying pressure with a clean cloth.

If the elbows are already installed, skip to Step 5.

3. Select one each:
   ㉓ 833-215C FASSE VALVE BLOCK ASSY 302-451
   and two:
   ㉑ 811-169C EL 9/16MJIC 9/16FJIC

   Install the elbows ㉑ on the end ports of the valve block, facing away from the back of the valve.

4. Apply some hydraulic fluid to the cone and threads of the male fittings. Torque 9/16 JIC fittings to 18-20 ft-lbs (24-27 N-m).

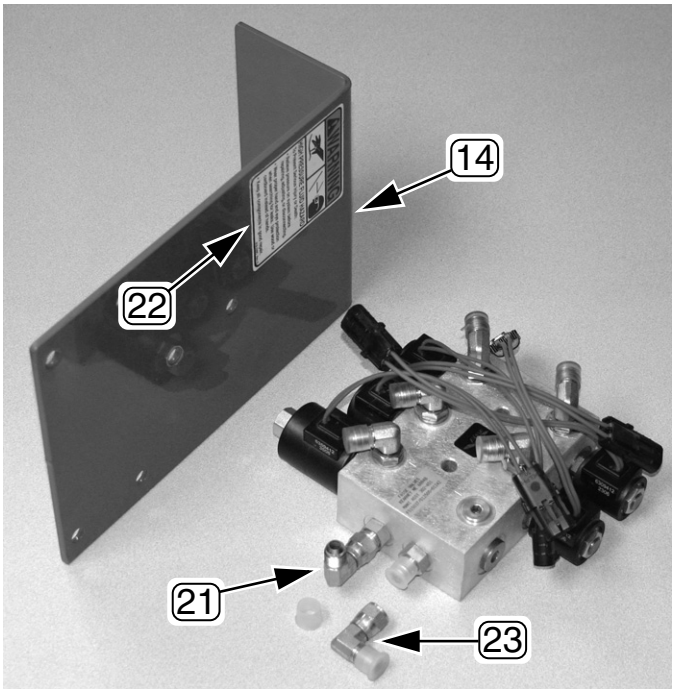

Figure 4 28172
Decal and Elbows

Refer to Figure 5

5. Select two sets:
   (15) 802-216C HHCS 3/8-16X2 3/4 GR5
   (16) 803-068C NUT HEX FLANGE 3/8-16 PLT

   With the break of the bracket (14) up, orient the valve block (23) with the elbows (21) up and the back of the valve block against the bracket.

   Insert the bolts (15) from the front of the valve block, and secure with nuts (16).

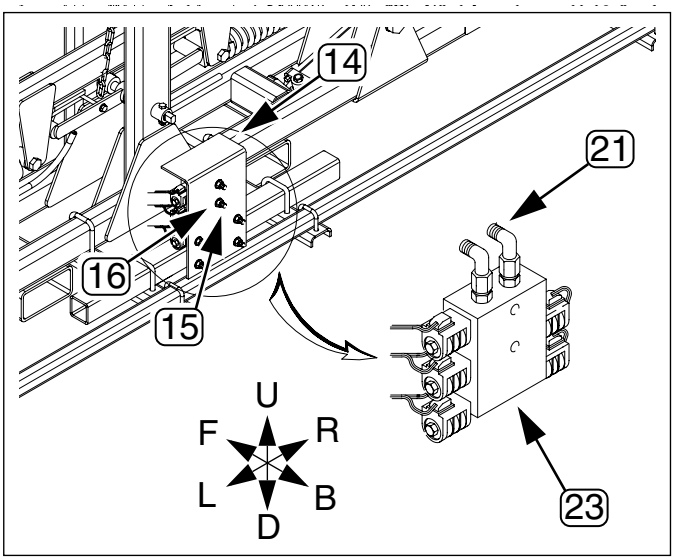

Figure 5 18369
Mount Control Valve

Install Valve

Refer to Figure 6

6. Select one:
   (13) 506-368D TUBE ELEC/HYD MTG FOR CF600
   and two:
   (19) 806-004C U-BOLT 3/8-16 X 2 X 2 3/4
   and two sets:
   (16) 803-068C NUT HEX FLANGE 3/8-16 PLT

   Place the tube (13) under the valve on the bracket (14), and secure with U-bolts (19) and nuts (16). Center the bracket on the tube.

7. Select two:
   (19) 806-004C U-BOLT 3/8-16 X 2 X 2 3/4
   and two sets:
   (16) 803-068C NUT HEX FLANGE 3/8-16 PLT

   Orient valve block facing forward, with break in bracket (14) at top.

   Secure tube (13) to new (12) and existing nozzle tube bracket (4), using U-bolts (19) and nuts (16).

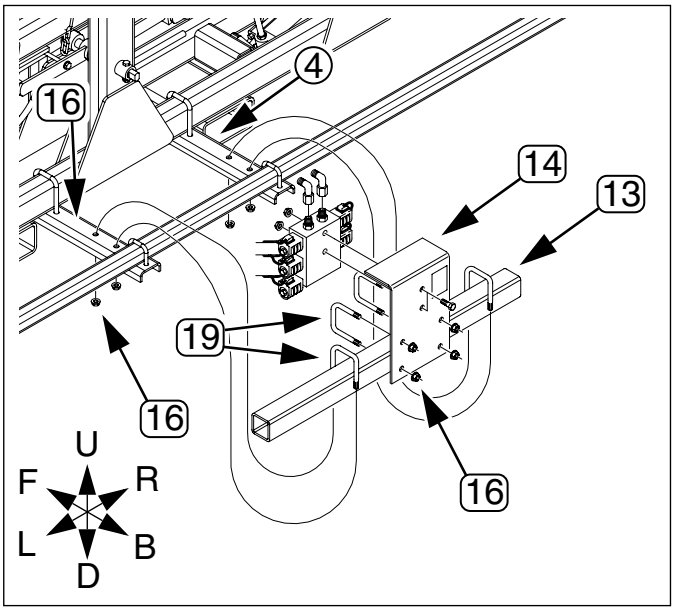

Figure 6 18366
Install Control Valve

Re-Connect Hoses

Refer to Figure 7

WARNING

High Pressure Fluid Hazard - Bleed closed circuits. If sprayer hydraulics are still connected to a hydraulic power source, such as a tractor, even if shut down, set the control for the sprayer boom to Float. Crack (slowly loosen) circuits at JIC connectors and allow any pressure to bleed off before fully disconnecting.

8. On boom and elevator cylinders, disconnect hydraulic hoses at unions ⑤ (MJIC-to-MJIC Adaptors). Unions are not re-used.
9. Connect two of the longer hose sections ⑤ to tractor hydraulic outlets. Use shorter hose sections ⑪ to connect cylinders to new control-valve ports.

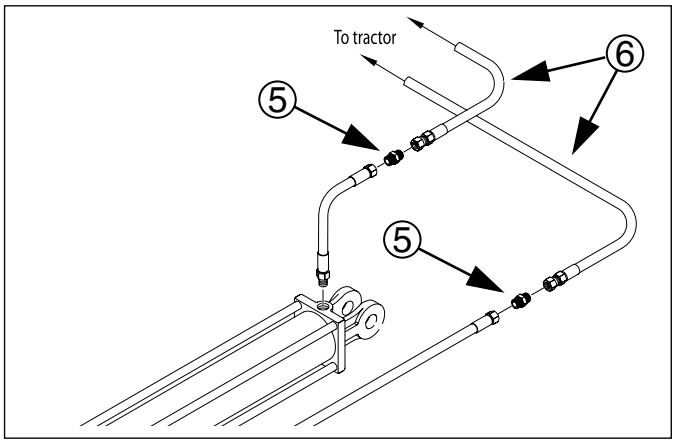

Figure 7 17601
Prepare Existing Hoses

Refer to Figure 8

On an existing sprayer, there may be 4 or 5 hoses from the sprayer cylinders to the tractor. Only one pair is needed after this upgrade. Select a hose pair that provides optimum slack at the hitch. Salvage any other hose pairs.

10. Connect two hoses ⑤ from tractor hydraulic outlets to port P1 and P2 (stamped in valve block). If the hoses are labelled, the port assignments are:
    P1 - Left EL - Base end from tractor
    P2 - Right EL - Rod end from tractor

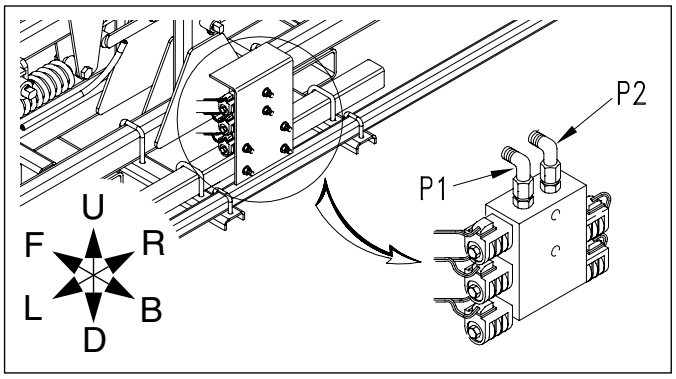

Figure 8 18369
Tractor Ports at Valve Block

Refer to Figure 8

11. Connect hoses from elevator and wing cylinders to control-valve ports. Assignments (stamped in valve) are:
    1 (Left) - Elevator Base End
    2 (Left) - Left Wing Base End
    2 (Right) - Left Wing Rod End
    3 (Left) - Right Wing Base End
    3 (Right) - Right Wing Rod End

Note: The elevator cylinder is “single-acting”, and has a single hose.

12. Torque all JIC fittings to specification (see Step 4).

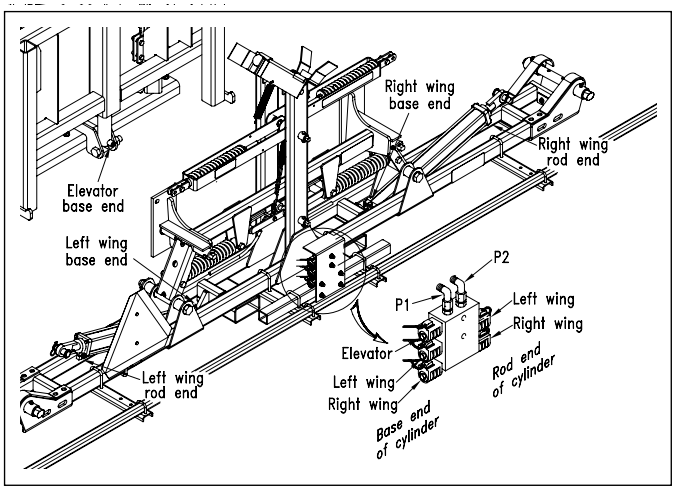

Figure 9 18370
Boom Ports

Install Sprayer Harness

Refer to Figure 10

13. Select one:
    ㉖ 833-218C FASSE HARNESS
    It has five 2-pin connectors (control valve leads) at one end, and a single 5-pin connector (tractor lead) at the other.
14. Connect harness valve leads ⑥ to control valve leads ③. Examine colors on harness connectors and match each harness connector with the correct port connector. There is no distinction between Left and Right ports at the leads - both base and rod solenoids operate simultaneously.
15. Secure harness to boom so it is not damaged during boom operation.

㉓ Valve Port	㉖ Harness Lead
1	White / Black
2	Green / Black
3	Red / Black

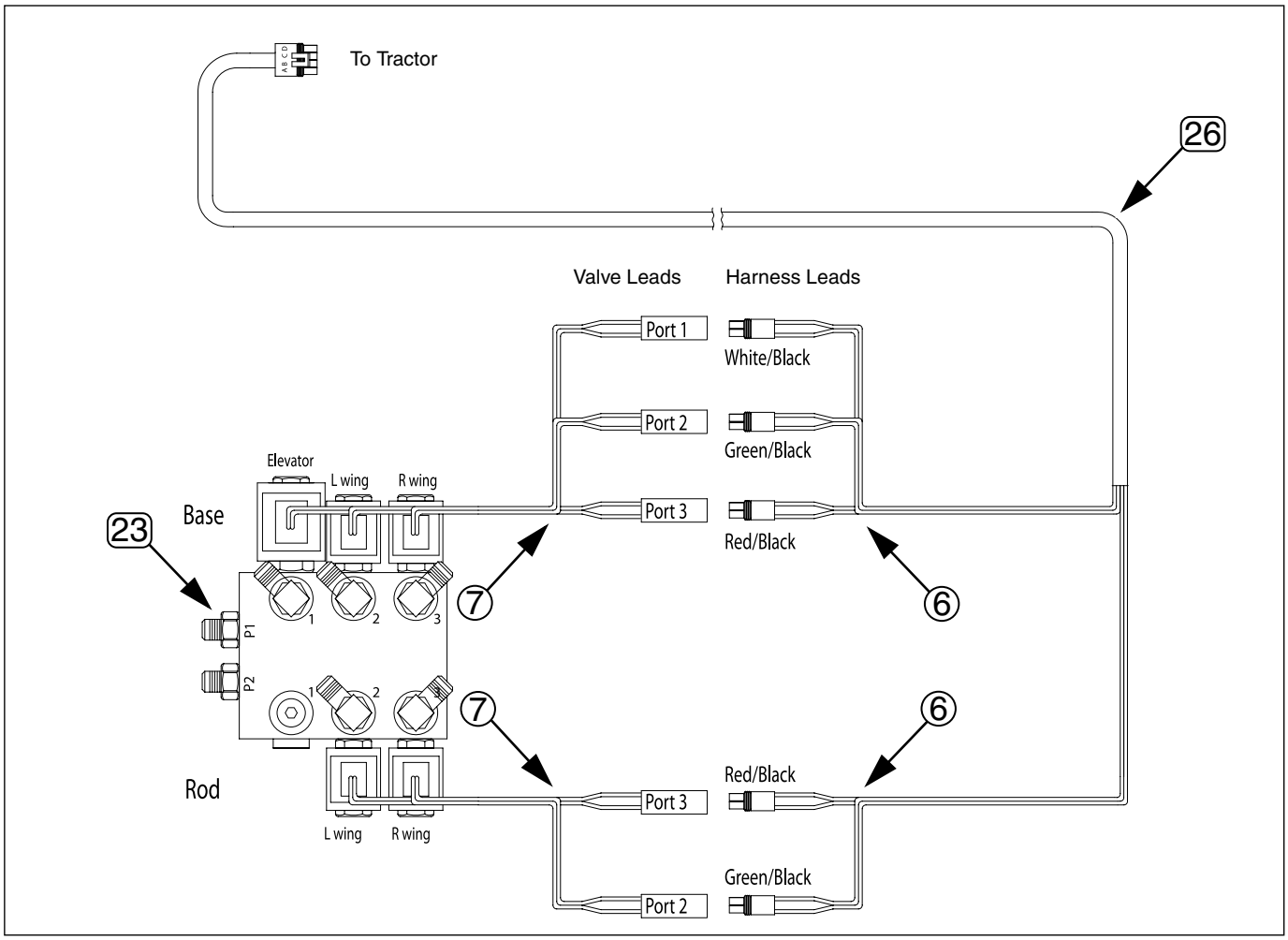

Figure 10
Harness Connections

17526

Install Cab Components

Refer to Figure 11

16. Select one:
    ㉔ 833-216C FASSE HANDLE RCS ASSY 1020C
    or
    ㉕ 833-217C FASSE SWITCH BOX
    depending on kit ordered.
17. Mount valve controller in tractor cab.

    If the kit contains a joystick controller ㉔, select appropriate U-bolt fasteners ⑧ from supplied assortment, and secure the controller to the hydraulic remote lever for boom operations.

    If kit contains a switch box ㉕, mount box in an accessible location in tractor cab. Kit includes bracket, but does not include mounting fasteners.
18. Connect power leads ⑨ from controller to a 12-volt, negative-ground power source. To prevent valve from draining tractor battery, connect power leads to fuse panel, key switch or other source that is not energized when tractor is off. Connect red lead to positive (+) terminal and black lead to negative (-) terminal or other ground.
19. Route controller harness to hitch and mate with sprayer harness. If slack is insufficient, select one:
    ㉗ 833-219C FASSE HARNESS EXTENSION

    Insert it in the circuit to provide more slack. Tie up any excess cable so that it cannot touch the ground during operations (or when the tractor used with other implements).
20. Secure harness to tractor so it is not damaged during tractor and boom operations.

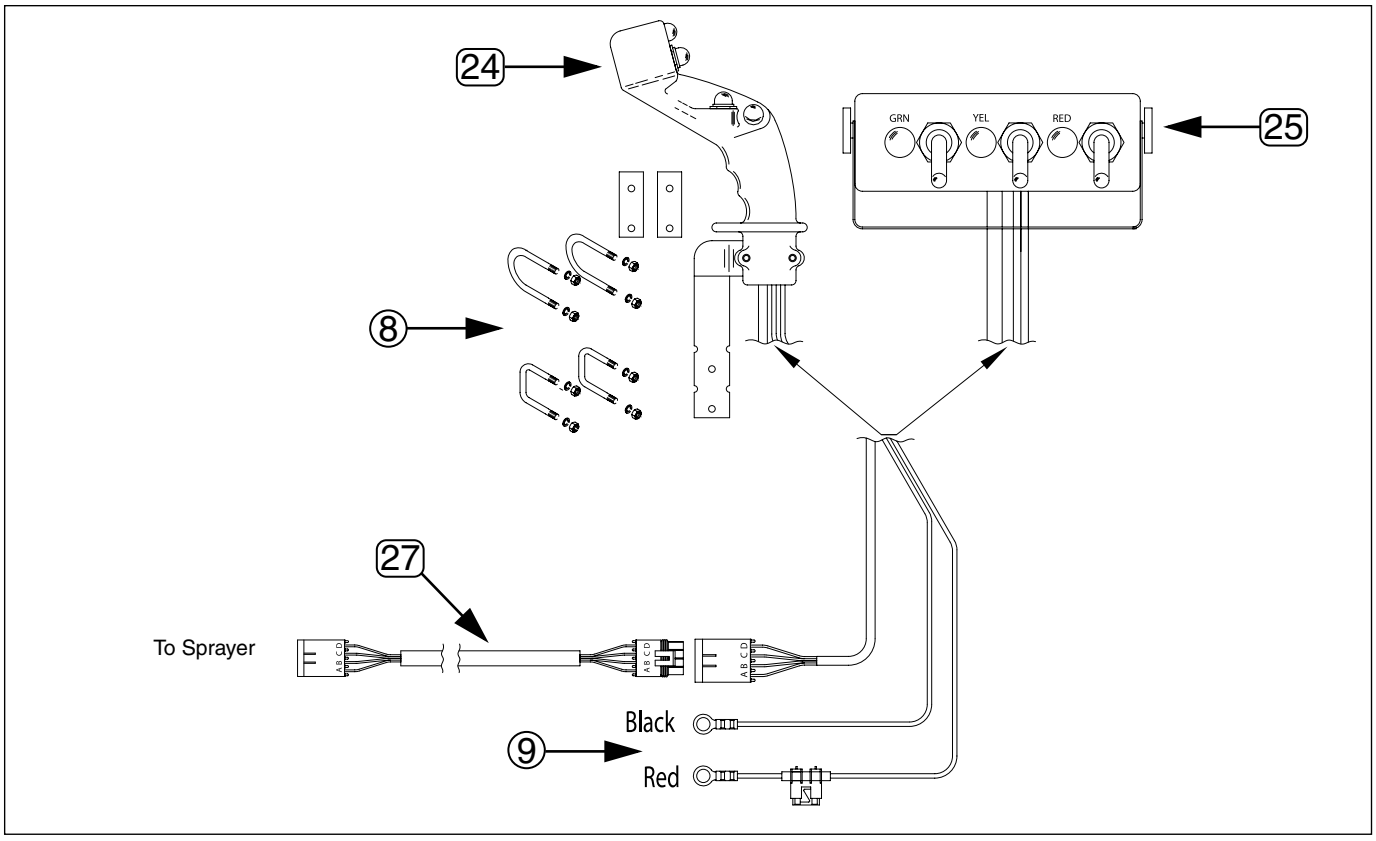

Figure 11
Cab Connections

17526

Operations

Refer to Figure 12
Switch box switches are 2-position toggles.
Joystick switches are 2-position push-button.
They remain in their currently selected status until changed.

When power is being supplied to the controller, an indicator lamp at each switch is on if the switch is engaged and power is being supplied to the assigned solenoids. An indicator is off is the switch is off, or power is off.

The switch assignments are:

Switch Color	(Valve Port) Cylinder Controlled
Ⓖ Green	② Left Boom Fold/Unfold
Ⓨ Yellow	① Elevator Lift/Lower
Ⓡ Red	③ Right Boom Fold/Unfold

The hydraulic circuit lever is normally left in the Neutral position, to hold the cylinder positions. To fold/unfold or lift/lower, engage the switch for that cylinder, and operate the lever.

Cylinders may be operated individually or as groups.

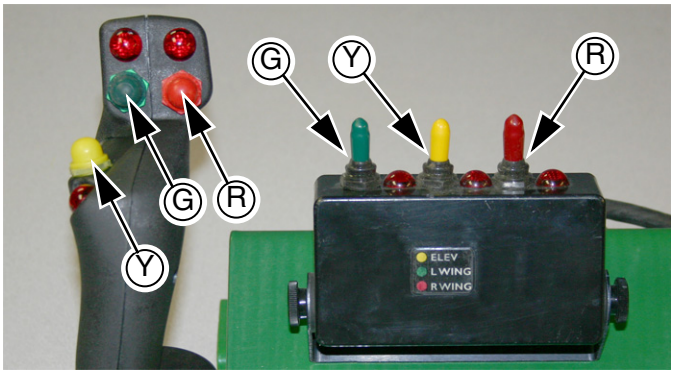

Figure 12
Switch Functions
28173

Parts List

506-584A ELEC/HYD KIT JOY STICK
506-585A ELEC/HYD KIT SWITCH BOX

Callout	Part Number	Quantity in Kit 506-		Description	Torque Value
		506-584A	506-585A		
(11)	506-605M	1	1	MANUAL FASSE VALVE INSTALL	
(12)	506-357D	1	1	C-SECTION NOZZLE TUBE BRACKET	
(13)	506-368D	1	1	TUBE ELEC/HYD MTG FOR CF600	
(14)	510-022D	1	1	FASSE VALVE BLOCK MTG PLATE	
(15)	802-216C	2	2	HHCS 3/8-16X2 3/4 GR5	31 ft-lbs / 32 N-m
(16)	803-068C	12	12	NUT HEX FLANGE 3/8-16 PLT	31 ft-lbs / 32 N-m
(17)	803-199C	2	2	NUT HEX FLANGE 5/16-18 PLT	17 ft-lbs / 24 N-m
(18)	806-001C	1	1	U-BOLT 3/8-16 X 2 X 4	31 ft-lbs / 32 N-m
(19)	806-004C	4	4	U-BOLT 3/8-16 X 2 X 2 3/4	31 ft-lbs / 32 N-m
(20)	806-107C	1	1	U-BOLT 5/16-18 X 1 17/32X2 1/8	17 ft-lbs / 24 N-m
(21)	811-169C	2	2	EL 9/16MJIC 9/16FJIC	18-20 ft-lbs / 24-27 N-m
(22)	818-339C	1	1	DECAL WARNING HIGH PRESSUR SML	
(23)	833-215C	1	1	FASSE VALVE BLOCK ASSY 302-451	
(24)	833-216C	1		FASSE HANDLE RCS ASSY 1020C	
(25)	833-217C		1	FASSE SWITCH BOX	
(26)	833-218C	1	1	FASSE HARNESS	
(27)	833-219C	1	1	FASSE HARNESS EXTENSION	

Great Plains Manufacturing, Inc.

Corporate Office P.O. Box 5060
Salina, Kansas 67402-5060 USA