Table of Contents Index

Hay Rake

RA108CR, RA110CR, RA210CR, and RA212CR

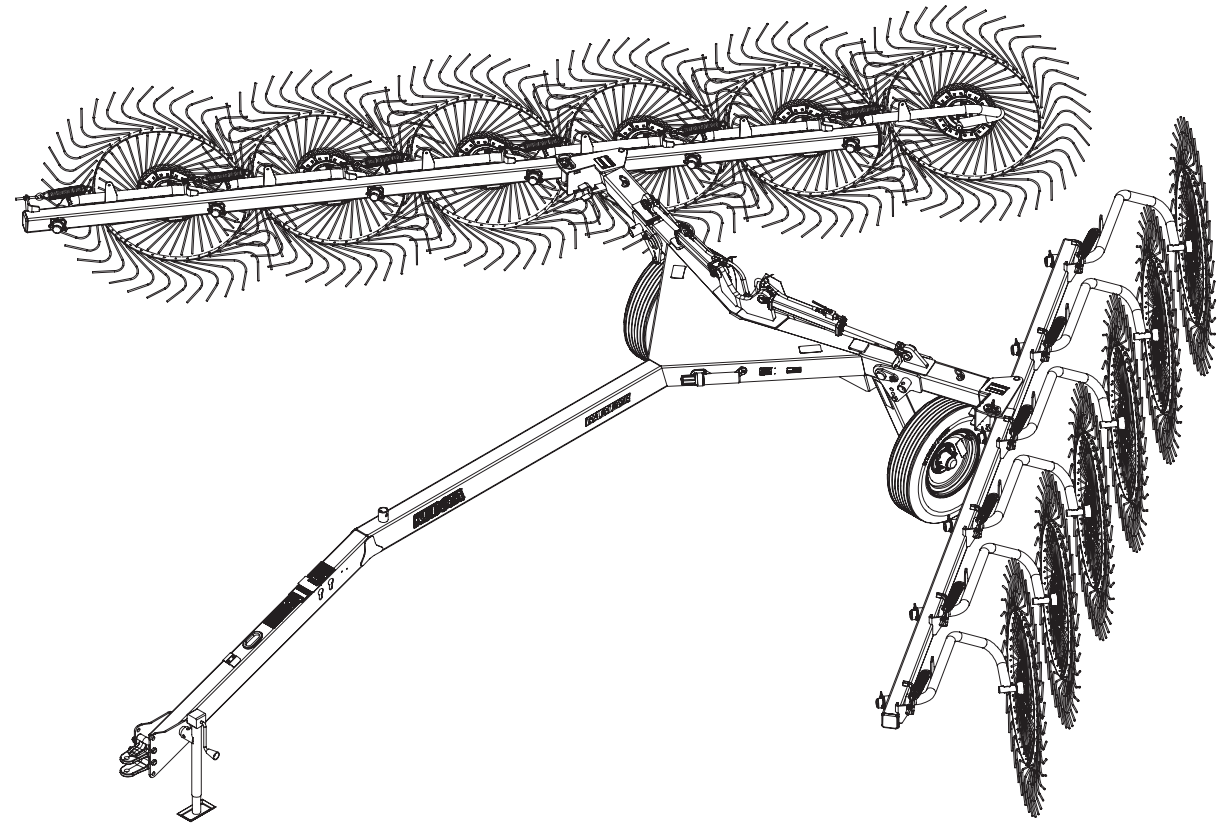

38863

Kubota®

512-069QK

Pre-Delivery Manual

Read the operator manual entirely. When you see this symbol, the subsequent instructions and warnings are serious - follow without exception. Your life and the lives of others depend on it! Illustrations may show optional equipment not supplied with standard unit.

Table of Contents

Introduction **1**
Safety Information **2**
Pre-Delivery Planning **6**
Tools Required 6
Work Space Requirements 6
Delivery Cycle 6
Unload Trailer **7**
Plan the Unload 7
Unloading Miscellaneous Components 7
Unloading the Wings 8
Unloading the Mainframes 9
Implement Assembly **11**
Installing the Wing Arms 11
Bleeding the Hydraulic System 12
Installing the Wings 13
Installing the Rake Wheels 13
Kit Installations **14**
Kit Locations 14
Installation of Wing Extension Kit (Models RA108CR and RA210CR only) 15
Installation of Single / Dual Kicker Kits 17
Installation of a Wind Screen Kit 22
Reference Information **23**
Specifications 23
Torque Values Chart 24
Tire and Wheel Information 24
Hydraulic Connectors and Torque 25
Hydraulic Diagrams 26
Wiring Diagram 28

Introduction

Kubota's RA108CR - RA212CR hay rake is a pull-type unit designed for gathering material and making crop windrows. Every RA108CR - RA212CR hay rake we build is designed and built with care using only quality materials. For the best installation experience, read this manual and follow all instructions carefully. These pages will guide you through the unloading process and contain tips for easier assembly.

All information in this manual is current as of publication. Information contained within is subject to change to ensure top performance.

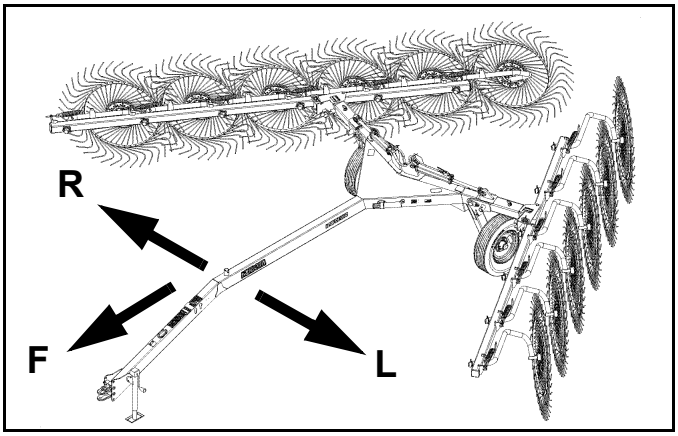

Figure 1 38863
Left-Hand/Right-Hand Notation

■ Models Covered

RA108CR	8 Wheel Cart Rake
RA110CR	10 Wheel Cart Rake
RA210CR	10 Wheel Cart Rake
RA212CR	12 Wheel Cart Rake

■ Document Family

512-069QK	Pre-delivery Manual (This manual)
512-069PK	Parts Manual
512-069MK	Operator Manual

■ Pre-assembly Checklist

- ❑ Before assembling, read and understand "**Safety Information**" on page 2 in front part of this manual.
- ❑ Have at least two people on hand while assembling.
- ❑ Make sure area is level and free of obstructions (preferably an open, concrete surface).
- ❑ Check that all major components, fasteners, and pins are accounted for.

■ Tools Required

The following tools are required for installation:

- Basic Hand Tools
- Torque Wrench
- Fork Truck, Overhead Hoist or Loader

Refer to "**Torque Values Chart**" on page 24 when tightening machine hardware.

■ Further Assistance

For additional help with understanding these assembly instructions or for any other assembly or setup related questions, please contact our service department at the following address:

Kubota Tractor Corporation
1000 Kubota Drive
Grapevine, TX 76051

Or call us at **(817) 756-1171** to speak over the phone with a service representative.

Copies of this machine's operator manual are available by mail or online. Please visit **www.kubota.com** and follow the product link for information on your machine, or use the QRC code below to view our publications store.

Kubota QRC

The QR Code (Quick Response) to the left will take you to the Kubota web page. Use your smart phone or tablet to scan the QR Code with an appropriate app to begin viewing.

Kubota Publications QRC

The QR Code (Quick Reference) to the left will take you to Kubota publications store. Search for your machine's associated manuals or refer to your operator manual for a complete list of publications.

Safety Information

■ Look for Informational Symbols

The SAFETY ALERT SYMBOL indicates there is a potential hazard to personal safety involved and extra safety precaution must be taken. When you see this symbol, be alert and carefully read the message that follows it. In addition to design and configuration of equipment, hazard control and accident prevention are dependent upon the awareness, concern, prudence and proper training of personnel involved in the operation, transport, maintenance and storage of equipment.

NOTE indicates useful, but not crucial, information for machine operation, assembly, or adjustment. It may also direct you towards additional information.

■ Be Aware of Signal Words

Signal words designate a degree or level of hazard seriousness. The signal words are:

DANGER

DANGER indicates an imminent hazard which, if not avoided, will result in death or serious injury. This signal word is limited to the most extreme situations, typically for machine components that, for functional purposes, cannot be guarded.

WARNING

WARNING indicates a potential hazard which, if not avoided, could result in death or serious injury, and includes hazards that are exposed when guards are removed. It may also be used to alert against unsafe practices.

CAUTION

CAUTION indicates a potential hazard which, if not avoided, may result in minor or moderate injury. It may also be used to alert against unsafe practices.

NOTICE

NOTICE indicates a potential hazard which, if not avoided, may result in moderate to severe damage to your machine, machine parts, or nearby property.

■ Prepare for Emergencies

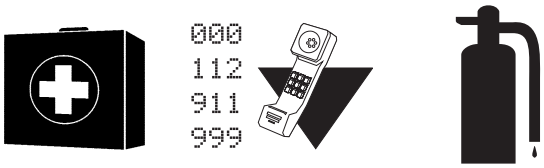

1. Be prepared if a fire starts.
2. Keep a first aid kit and fire extinguisher handy.
3. Keep emergency numbers for doctor, ambulance, hospital and fire department near phone.

■ Be Familiar with Safety Decals

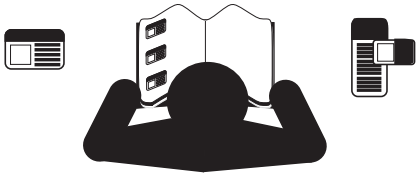

1. Throughly read and understand Safety Decal section of the Operator Manual.
2. Read all instructions noted on the decals.
3. Keep decals clean. Replace damaged, faded and illegible decals.

■ Wear Protective Equipment

1. Wear protective clothing and equipment appropriate for the job, such as safety shoes, safety glasses, hard hat, and ear plugs.
2. Clothing must fit snug without fringes and pull strings to avoid entanglement with moving parts.
3. Prolonged exposure to loud noise can cause hearing impairment or hearing loss. Wear suitable hearing protection such as earmuffs or earplugs.
4. Operating equipment safely requires your full attention. Avoid wearing entertainment headphones while operating machinery.

Use A Safety Chain

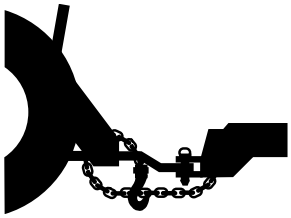

1. A safety chain will help control drawn machinery if the machinery separates from tractor drawbar.
2. Use a chain with a strength rating equal to or greater than the gross weight of towed machinery.
3. Attach chain to tractor drawbar support or other specified anchor location. Allow only enough slack in chain to permit turning.
4. Replace chain if any links or end fittings are broken, stretched or damaged.
5. Do not use safety chain for towing.

Avoid High Pressure Fluids

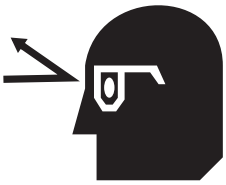

NOTE
Escaping fluid under pressure can penetrate the skin, causing serious injury.

1. Make sure all hydraulic fluid connections are tight and all hydraulic hoses and lines are in good condition before applying pressure to the system.
2. Avoid the hazard by relieving pressure before disconnecting hydraulic lines or performing any work on the system.
3. Wear protective gloves and safety glasses or goggles when working with hydraulic systems.
4. Escaping fluid under pressure can penetrate the skin causing serious injury.
5. Use a piece of paper or cardboard, **NOT BODY PARTS**, to check for suspected leaks.
6. **DO NOT DELAY.** If an accident occurs, seek immediate medical assistance from a physician familiar with this type of injury. Any fluid injected into the skin or eyes must be treated within a few hours or gangrene can result.

Tire Safety

NOTE
Tire changing can be dangerous and must be performed by trained personnel using correct tools and equipment.

1. When inflating tires, use a clip-on chuck and extension hose long enough for you to stand to one side–not in front of or over tire assembly. Use a safety cage if available.
2. When removing and installing wheels, use wheel-handling equipment adequate for weight involved.

Use Safety Lights and Devices

NOTE
Slow-moving tractors and towed machinery can create a hazard when driven on public roads. They are difficult to see, especially at night.

3. If equipped, use flashing warning lights and turn signals whenever driving on public roads.
4. Use safety devices provided with implement.

Keep Riders Off Machinery

NOTE
Riders obstruct the operator's view. Riders could be struck by foreign objects or thrown from the machine.

1. Never carry riders or use machinery as a personal lift.
2. Riders obstruct the operators view.
3. Riders can be struck by foreign objects or thrown from the machine
4. Never allow children to operate equipment.
5. Keep all bystanders away from machine during operation.

Transport Machinery Safely

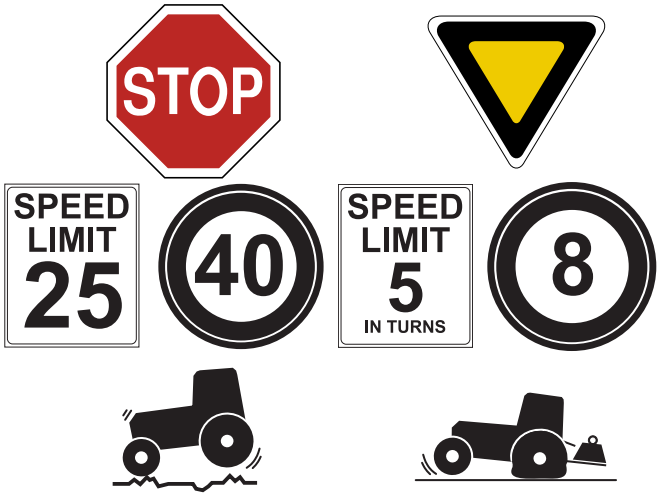

NOTE
Maximum Transport speed for implement is 40 kph (25 mph). Some rough terrains require a slower speed. Sudden braking can cause a towed load to swerve and upset.

1. Comply with state and local laws.
2. Do not exceed 40 kph (25 mph). Never travel at a speed that does not allow adequate control of steering and stopping. Some rough terrains require a slower speed.
3. Use caution when maneuvering with one or both wings folded up. Do not exceed 8 kph (5 mph) in turns. Steep inclines or sharp turns can cause the Hay Rake to turn over. Tipping can result in injury or equipment damage.
4. Carry reflectors or flags to mark machinery in case of breakdown on the road.
5. Keep clear of overhead power lines and other obstructions when transporting. Refer to transport dimensions under see "**Reference Information**" on page 23.
6. Do not tow an implement that, when fully loaded, weighs more than 1.5 times the weight of towing vehicle.
7. Turning tractor too tight can cause implement to tip over.
8. When towing on a trailer, secure implement with tie downs and chains.
9. When towing on a trailer, sudden braking can cause a trailer to swerve and upset. Reduce speed if trailer is not equipped with brakes.Shutdown and Storage

Shutdown and Storage

1. Park the tractor and implement on a solid, level surface where children normally do not play.
2. Raise the wings, put tractor in park or set park brake. Turn off engine and remove switch key to prevent unauthorized starting.
3. Wait for all components to come to a complete stop before leaving the operator's seat.
4. Put both lockout valves in the locked position to prevent the wings from lowering.
5. Unhitch the tractor. Secure the implement using blocks and supports.

Use Seat Belt and ROPS

1. KUBOTA recommends the use of a CAB or Roll Over Protective Structure (ROPS) and seat belt in almost all applications. This combination will reduce the risk of serious injury or death, should the tractor be upset.
2. If the tractor is equipped with a foldable ROPS it may be temporarily folded down only when absolutely necessary for areas with height constraints. (There is no operator protection provided by the ROPS in the folded position. For operator safety the ROPS should be placed in the upright and locked position and the seat belt fastened for aIndexll other operations.)
3. Always use the seat belt if the tractor has a CAB or ROPS. Do not use the seat belt if a foldable ROPS is down or there is no ROPS. Check the seat belt regularly and replace if frayed or damaged.

Practice Safe Maintenance

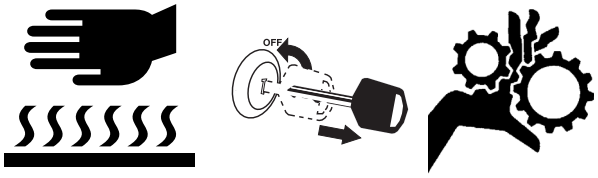

1. Understand procedure before doing work. Use proper tools and equipment. Refer to this manual.
2. Work in a clean, dry area.
3. Lower the implement. Put tractor in Park, turn off engine. To prevent unauthorized starting, remove key before performing maintenance or service work.
4. If work must be performed with wings raised, put both lockout valves in the locked position.
5. Make sure all moving parts have stopped and all system pressure is relieved.
6. Disconnect lighting harness from the tractor before servicing or adjusting electrical systems.
7. Welding: Disconnect lighting harness from the tractor. Protect hydraulic lines. Avoid fumes from heated paint.
8. Inspect all parts. Make sure parts are in good condition and installed properly. Replace parts on this machine with genuine Kubota parts only.
9. Do not alter this machine in a way which will adversely affect its performance.
10. Remove buildup of grease, oil or debris.
11. Remove all tools and unused parts from implement before operation.

Safety At All Times

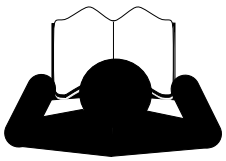

NOTE
Thoroughly read and understand the instructions in this manual before operation. Read all instructions noted on the safety decals.

NOTE
Do not allow anyone to operate this equipment who has not fully read and comprehended this manual and who has not been properly trained in the safe operation of the equipment.

1. The operator must not use drugs or alcohol as they can change the alertness or coordination of that person while operating equipment. If over-the-counter drugs are used, seek medical advice on whether you can safely operate equipment.
2. Operator must be familiar with all functions of the tractor and attachments, and be able to handle emergencies quickly.
3. Make sure all guards and shields are in place and secured before operating the implement.
4. Keep all bystanders away from equipment and work area.
5. Operator must start tractor and operate controls from the driver's seat only, never from the ground.
6. Dismounting from a moving tractor can cause serious injury or death.
7. Be familiar with all functions of the implement.
8. Do not leave implement unattended with tractor engine running.
9. Do not stand between the tractor and the implement during hitching.
10. Watch out for wires, trees, etc., when folding and raising the implement.
11. Turning tractor too tight can cause hitched implement to ride up on wheels. This can result in injury or equipment damage.
12. Use caution when maneuvering with one or both wings folded up. Do not exceed 8 kph (5 mph) in turns. Steep inclines or sharp turns can cause the Hay Rake to tip over. Tipping can result in injury or equipment damage.

Pre-Delivery Planning

The wings and rake wheels must be installed after a mainframe is unloaded from the trailer.

The only option shipped installed on rakes is the lighting option. Wing extension kits, kicker kits, and wind screen kits are shipped in crates. These kits must be installed after the rake is unloaded.

Shipping configuration may change over time.

Inspect the documentation for each rake and determine which kits need to be installed on specific rakes.

Tools Required

- A hoist or a fork lift with a capacity of at least 3,000 pounds (1361 kg)
- A tractor to supply hydraulic power to the wings.
- Basic hand tools

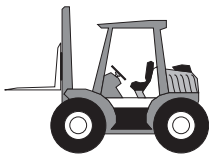

Work Space Requirements

Final assembly of a rake requires a solid, flat surface that is well-lit. The space must be large enough to accommodate the fully unfolded the wings and lifter access from all sides.

Delivery Cycle

Standard Kubota deliveries do not include time for implement assembly while still on the trailer bed. Do not install of the components shipped separately until the rake is unloaded and the wings have been installed. If you are reviewing this manual prior to delivery and you anticipate that you might have a problem implementing the unload instructions, notify Kubota prior to shipment.

Unload Trailer

Plan the Unload

Inspect the load. Plan the unload.

How to conduct the unload depends on:

- what type of dock is available (side dock or pit dock provides the greatest options), and
- what type of lifting equipment is available and the lifting capacity.

Unloading Miscellaneous Components

Refer to Figure 2

1. Use lifting equipment to remove all pallets, crates, and loose sub-assemblies from the trailer bed.
2. Check serial numbers (1) on components and crates against the serial number plates on the rakes. It is critical to place the separate components with the correct rake. This is especially important if the shipment includes multiple destinations.

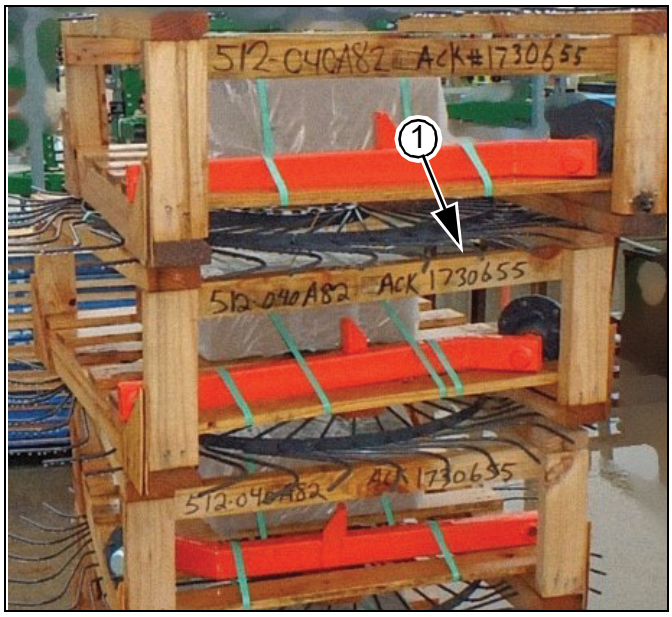

Figure 2
Crate

TP-71585

Unloading the Wings

NOTICE

Before unloading mainframes, unload all the wings for those mainframes.

Refer to Figure 3

1. Loads can be mixed. Compare the serial numbers on the mainframes to the documentation you received. Determine which mainframes you are to unload. It is only necessary to remove the wings for your mainframes.
   The wings are not marked for assembly. Use the illustration to match the wings with the correct mainframes.
2. As the wings are removed, fasten identification tags to the matching mainframe and wings. State whether the wing is a right-hand or a left-hand wing.
3. The mainframes are fastened together using shipping stands (1). The wings are also fastened to the shipping stands.

WARNING

The center of gravity on a wing can be outside of the shipping stands. In order to prevent serious injury or death, support the wing with lifting equipment before removing the U-bolts.

4. Use the lifting equipment to support wing (2C). Remove and discard the hardware that fastens the wing to the shipping stands.
5. Use the lifting equipment to remove the wing from the shipping stand. Position the wing well away from the trailer.
6. Repeat the procedure for the remaining wings.

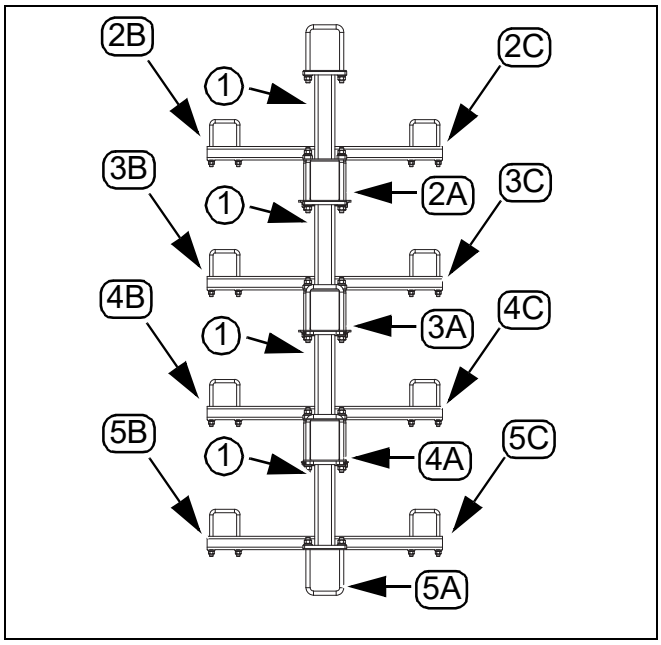

Figure 3
Shipping Positions for Wings and Mainframes

TP-71584

Unloading the Mainframes

NOTICE

Before unloading mainframes, unload all the wings for those mainframes.

Refer to Figure 4

Center of gravity of the mainframe is in front of the large triangle gusset (1).

WARNING

The center of gravity on a mainframe can be outside of the shipping stands. In order to prevent serious injury or death, support the mainframe with lifting equipment before removing the U-bolts.

1. If unloading a mainframes with a hoist:
   a. Use one chain, on the left side of the rake, to securely attach to the lifting plate on the both the front and the rear shipping stands.
   b. Use a second chain, on the right side of the rake, to securely attach to the lifting plate on the both the front and the rear shipping stands.
   c. Use chains that are individually rated for at least half the load.
2. If unloading a mainframe with a fork lift:
   a. Spread the forks as wide as possible without striking any mainframe components. Insert the fork nearest to the rear of the rake, through the fork pockets bolted to the rake mainframe.
   b. Strap the mainframe to the forks at the contact points, to prevent tilting and shifting.
   c. Keep the mainframe center of gravity between the two forks.
   d. Use a fork lift that is rated for the load.
3. Make sure there is room to unload each mainframe and assemble both wings on each rake.
4. From one to four mainframes can be included in a shipment. Mainframes can only be unloaded one or two at a time.

WARNING

Do not remove more than two mainframes at a time.

5. Mainframes are held together by U-bolts and shipping stands. When unloading two mainframes at once, do not remove the shipping stands between the two mainframes.
6. Determine the bottom mainframe being removed. Remove and discard the U-bolts that fasten the bottom mainframe to the shipping stands.
7. On the mainframe(s) being removed, release any straps or chains securing the mainframe(s) to the trailer bed.

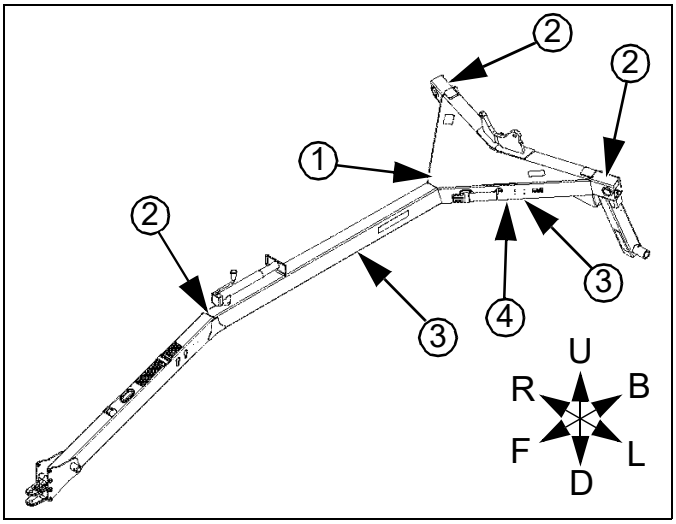

Figure 4
Mainframe
(Shown without wing arms)

68017

8. Make sure the mainframe(s) not being unloaded are strapped or chained to the trailer bed.
9. Use the lifting equipment to remove the mainframe(s) from the trailer. Position the mainframe(s) in an area where there is room to install the wings using lifting equipment.
10. Lower the (bottom) mainframe to level where the transport wheels can easily be installed on the bottom rake.
11. Install the transport wheels on the (bottom) mainframe. Start the lug nuts onto the wheel studs.

Refer to Figure 5

12. Make sure the parking jack (1)is properly attached to the side of the tongue (2) on the bottom mainframe. The parking jack must be secured with the detent pin (3).
13. Lower the mainframe(s) to the ground.
14. Tighten the lug nuts.
15. If two mainframes were unloaded at one time, do the following to separate the two mainframes:
    a. Support the top mainframe with the lifting equipment.
    b. Remove and discard the U-bolts and shipping stands between the mainframes.
    c. Move the top mainframe well away from the bottom mainframe.
    d. Raise the top mainframe(s) to a level where the transport wheels can easily be installed.
    e. Install the transport wheels and the lug nuts.
    f. Make sure the parking jack (1) is properly attached to the side of the tongue (2). The parking jack must be secured with the detent pin (3).
    g. Lower the mainframe to the ground.
    h. Tighten the lug nuts.
16. Remove and discard the two fork pockets bolted to the rake frame.

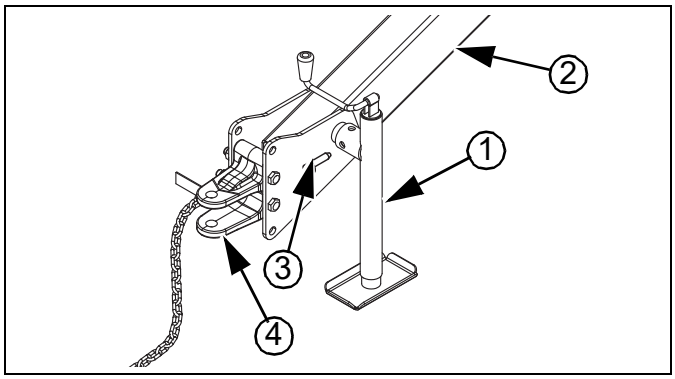

Figure 5 38950
Parking Jack in Parking Position

Implement Assembly

Installing the Wing Arms

Refer to Figure 6

1. Some mainframes have the wing arms assemblies removed for shipping. Do the following procedure to install the wing arm assemblies.

WARNING

In order to prevent serious injury or death, support the wing arm assembly with lifting equipment during installation.

   a. Use lifting equipment to install the wing arm assembly (1) on the mainframe. Make sure the adjustment holes (2) are toward the front of the rake.
   b. Install the clevis pin (3) through the wing arm assembly and the mainframe.
   c. Install the spacer tube (4) in the ear of the clevis pin.

WARNING

In order to prevent serious injury or death, install spacer tube as instructed to properly secure the pin to the frame.

   d. Install the bolt (5) from inside the wing arm assembly. Install the washer (6) and the locknut (7).
   e. Tighten the lock nut to 103 N m (76 lb-ft).

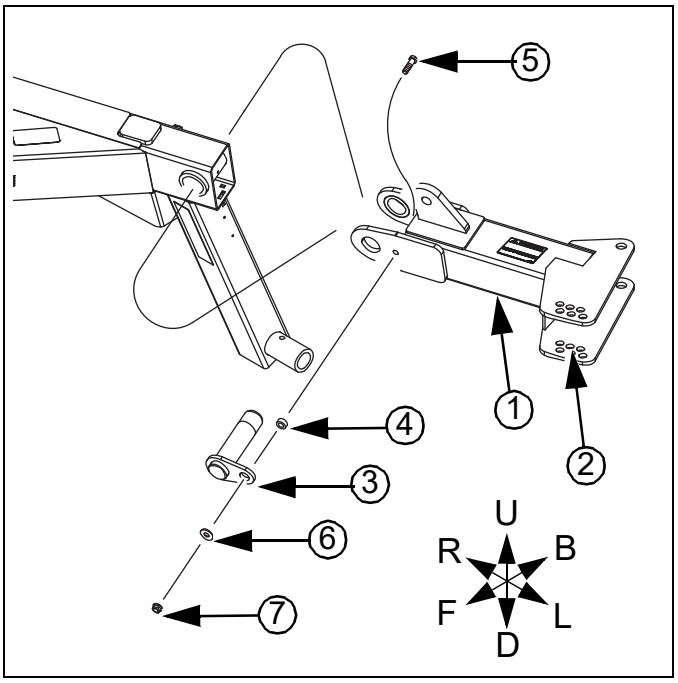

Figure 6 68018
Wing Arm Assembly Installation

Refer to Figure 7

2. Unfasten the rod end (1) of the wing cylinder from the mainframe.
3. Remove the hardware from the rod end of the wing cylinder.
4. Install one of the machine bushings on the clevis pin.
5. Align the rod end with the lug (2) on the top of the wing arm assembly.
6. Install the clevis pin.
7. Install the other machine bushing and a cotter pin on the clevis pin.
8. Repeat the procedure for the wing arm assembly on the opposite side of the mainframe.

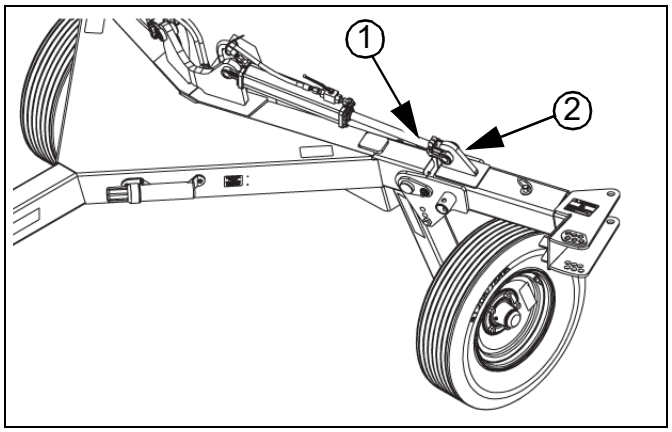

Figure 7 68125
Wing Arm Assembly Installation

Bleeding the Hydraulic System

WARNING

High Pressure Fluid Hazard:
Relieve pressure before disconnecting hydraulic lines. Wear protective gloves and safety glasses or goggles when working with hydraulic systems. Escaping fluid under pressure can have sufficient pressure to penetrate the skin causing serious injury. Use a piece of paper or cardboard, NOT BODY PARTS, to check for leaks. If an accident occurs, seek immediate medical attention from a physician familiar with this type of injury.

Only trained personnel should work on system hydraulics!

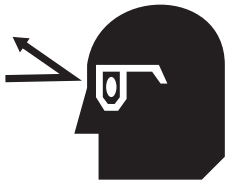

NOTICE

System Contamination Risk:
Always use liquid pipe sealant when adding or replacing NPT (National Pipe Thread, tapered thread) pipe-thread fittings. To avoid cracking hydraulic fittings from over tightening, and to keep tape fragments from clogging filters, do not use plastic sealant tape.

📖 The wings must be lowered to install any of the kits.

1. At the rear of the rake, put all of the lockout valves in the unlocked position.
2. Connect the rake to a tractor hydraulic system.
3. Operate the tractor remote lever to raise and lower the wings several times.

📖 If equipped with a kicker wheel(s), the kicker wheel(s) will raise and lower with the wings.

4. When the movements are smooth and even, the air has been removed from the hydraulic system.
5. Lower the wing arms so the wings can be installed.
6. Apply the tractor parking brake. Stop the tractor engine and take the key with you to prevent unauthorized starting.
7. Disconnect the rake from the tractor hydraulic system.

Installing the Wings

Refer to Figure 8

WARNING

In order to prevent serious injury or death, support the wing arm assembly with lifting equipment during installation.

1. Use lifting equipment to lift the wing (1). Install the wing between the two attaching plates (2) on the outer wing arm. Make sure the arms (3) for the rake wheels are facing out.
2. Insert the 1 inch clevis pin (4) through the attachment plates and the wing.
3. Align one of the holes (5) in the mounting plate with the hole in the wing.
4. Insert the $^{3}/_{4}$ inch hitch pin (6) through the attachment plates and the wing.
5. Repeat the procedure to install the other wing.

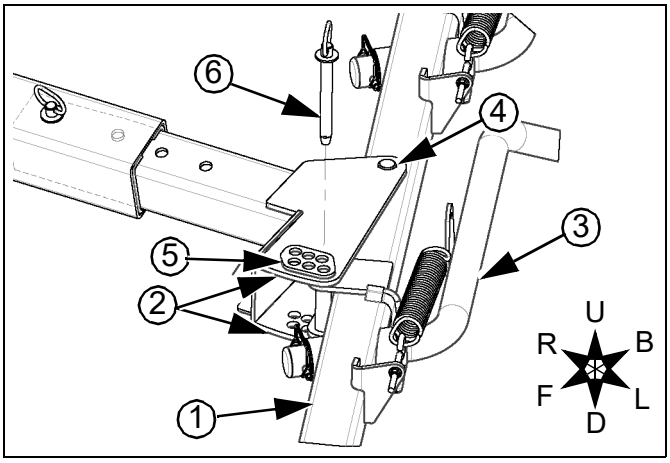

Figure 8
Wing Installations

68012A

Installing the Rake Wheels

Refer to Figure 9

1. Make sure the wings are lowered.
2. Remove the rake wheels from the shipping crate. Make sure the serial number on the shipping crate is the same as the serial number on the rake.
3. The rake wheels are marked for left-hand and right-hand installation. Place the right-hand rake wheels on the right-hand side of the rake.

Right-hand and left-hand on the rake is determined by the direction the rake will be moving when raking.

4. Install a right-hand rake wheel (1) on the wheel studs of a right-hand hub (2). The side of the rake wheel with the series of small plates (3) must be toward the hub.
5. Install the flange lock nuts (4) on the wheel studs and tighten to 35 N m (26 lb ft).
6. Continue to install the rake wheels on the right-hand side of the rake.
7. Install the rake wheels on the left-hand side of the rake.

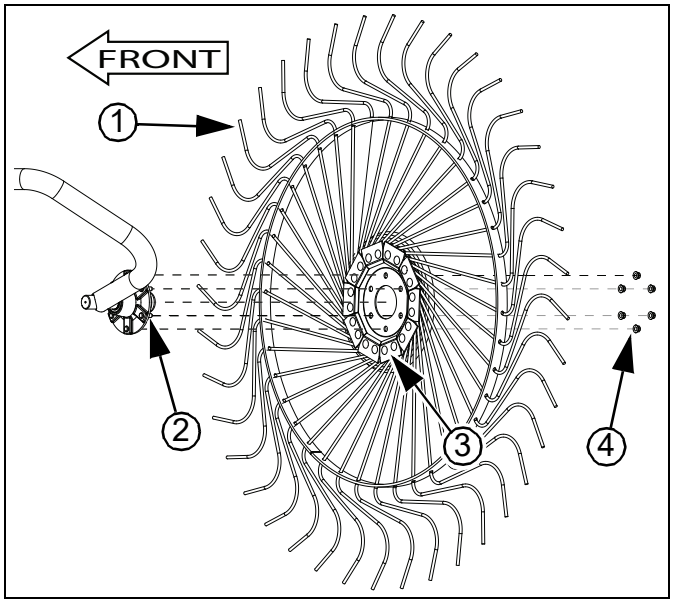

Figure 9
Rake Wheel Installation

38940

Kit Installations

Kit Locations

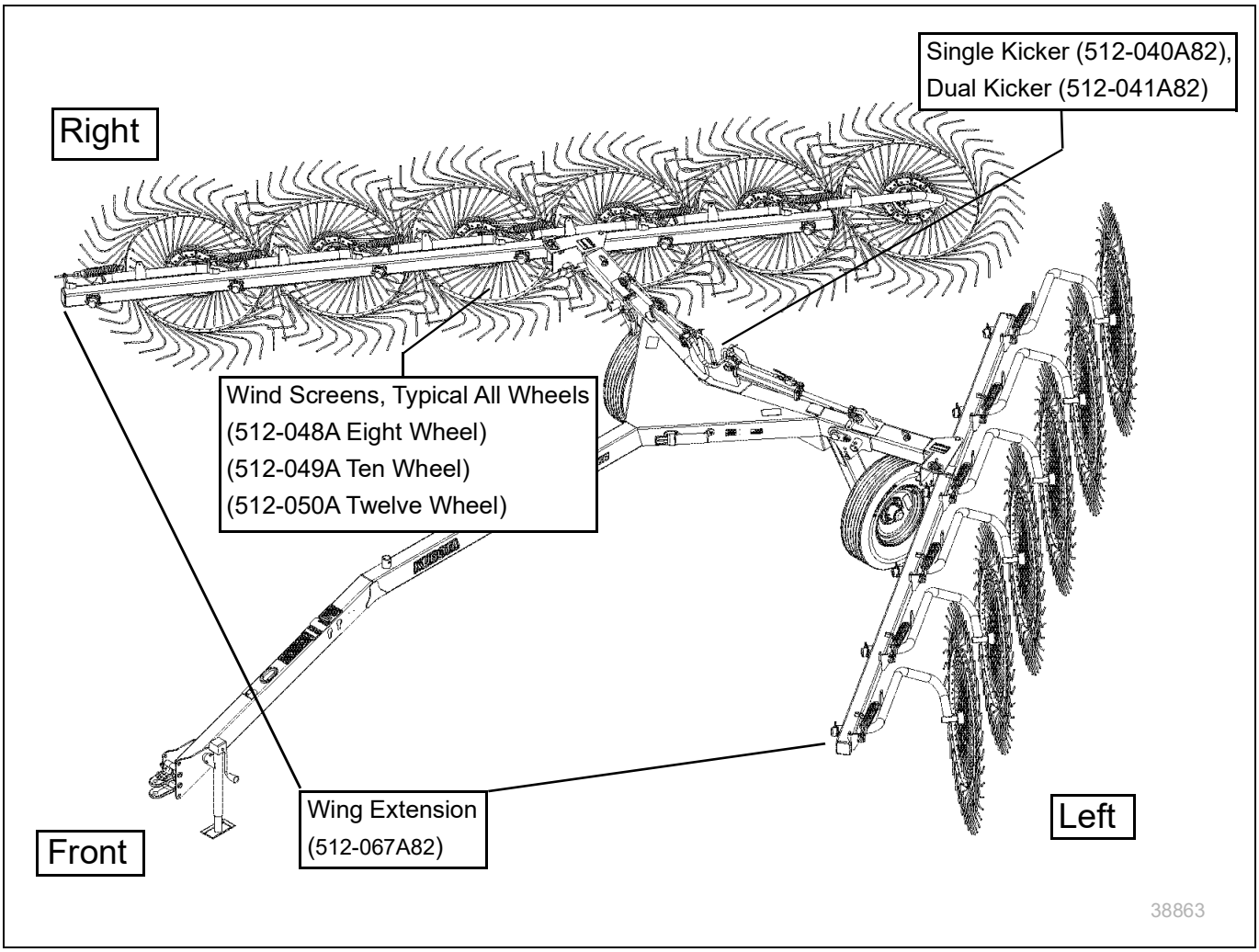

Installation of Wing Extension Kit (Models RA108CR and RA210CR only)

📖 The rake wheels may be shipped separate from the rest of the wing extension components.

Refer to Figure 10

1. Park the rake on a solid level surface.
2. Lower the wings.
3. Apply the tractor parking brake. Stop the tractor engine and take the key with you to prevent unauthorized starting.
4. A bag of hardware is located inside of one of the extension tubes. Remove the bag.

Refer to Figure 11

5. Find the right-hand wing extension tube (1). Compare both wing extension tubes to the right-hand wing to determine which is the right-hand extension tube. Determine the correct orientation for installing the right-hand extension tube.
6. Remove the square plug (not shown) from the end of the wing tube. Keep the square plug. Insert the small end of the right-hand wing extension tube into the wing tube.
7. Align the holes in the right-hand wing extension tube and the wing tube. Install, but do not tighten, the bolts (2), flat washers (3), and nuts (4) from the bag of hardware.
8. Hold the right-hand wing tube in alignment lengthwise with the wing tube. Tighten the hardware to 103 N m (76 lb-ft).
9. Install the square plug removed earlier in the end of the extension tube.
10. Install the two bushings (5) in the right-hand extension tube.
11. Compare the two rake arms to the rake arms on the right-hand wing tube to determine which is the right-hand rake arm assembly (6).
12. Install a square cap (7) on both of the ears on the inner end of the right-hand rake arm assembly.
13. Install the inner end of the right-hand rake arm assembly into the right-hand extension tube.
14. Install a flat washer (8), the wire lock pin (9) and the plug (10).
15. Connect one end of a spring (11) to the ear on the right-hand rake arm, and then connect the eyebolt (12) to the other end of the spring.
16. Install a 3/8-16 nut (13) and then a flat washer (14) on the eyebolt. Insert the eyebolt through the ear on the right-hand extension tube. Install a flat washer (14) and then a 3/8-16 nut (13) on the eyebolt.

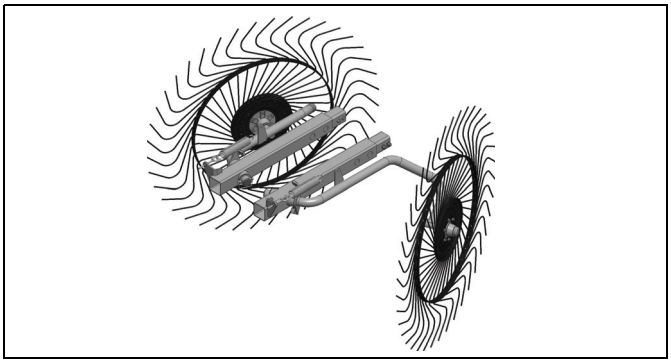

Figure 10 38939
Wing Extension Kit

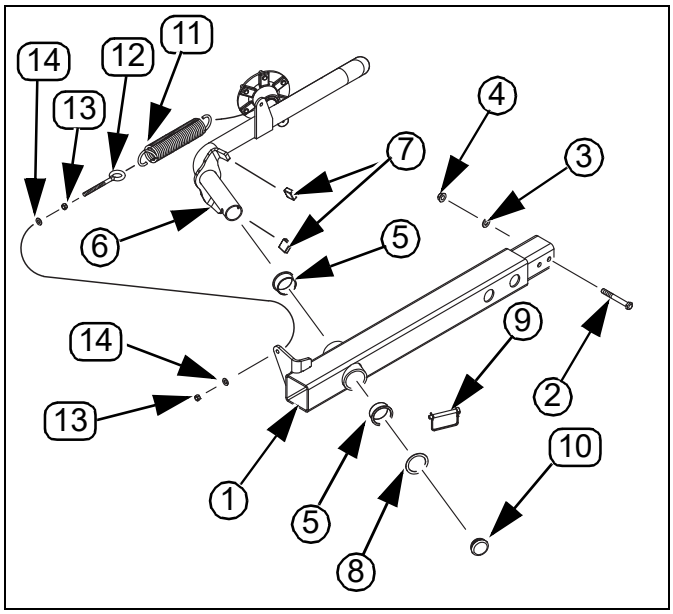

Figure 11 68658
Wing Extension

Refer to Figure 12

17. Measure the distance (A) from the end of the eyebolt to the outer face of the inner jam nut. The initial distance should be 2.5 in (63.5 mm).
18. The rake wheels are marked for left-hand and right-hand installation.

Right-hand and left-hand on the rake is determined by the direction the rake will be moving when raking.

Refer to Figure 13

Make sure to use the wheels labeled 'RH' on the right-hand side wings of the machine and the wheels marked 'LH' on the left-hand side. If labels are missing or damaged, check that the wheel tines facing towards the front of the machine have tine ends (1) pointing upwards. If the front-facing tines are pointed downwards, move the wheel to the other wing.

19. Install a right-hand rake wheel (1) on the wheel studs on a right-hand hub (2).

Rake wheel face must adjoin to hub (2) on the side of the wheel with the small metal plates (3).

20. Install the flange lock nuts (4) on the wheel studs and tighten to 35 N m (26 lb ft).

Refer to Figure 12

21. Check the down pressure on the rake wheel(s).
    If adjustment is necessary, measure the distance (A) from the end of the eyebolt to the outer face of the inner jam nut. The initial distance should be 2.5 in (63.5 mm).
    a. Increase distance (A) to increase the flotation pressure.
    b. Decrease distance (A) to decrease the flotation pressure.
    c. Tighten the jam nuts without changing the adjustment.

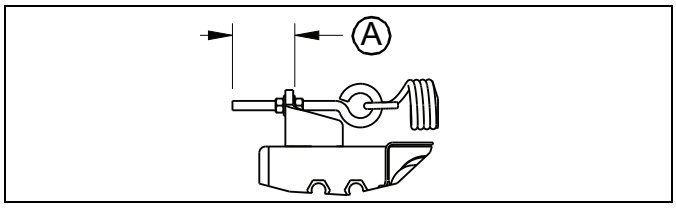

Figure 12 38941
Down Pressure Adjustment

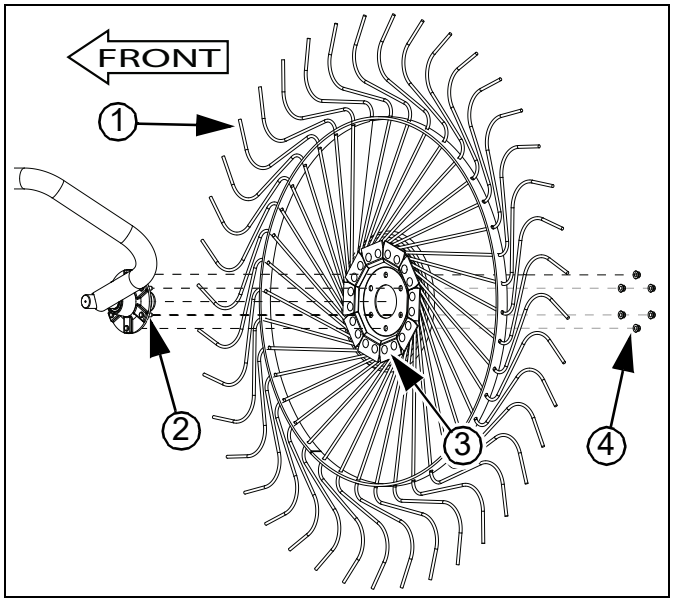

Figure 13 38940
Rake Wheel Installation

Installation of Single / Dual Kicker Kits

Refer to Figure 14

See "**Hydraulic Connectors and Torque**" on page 25 to tighten hydraulic fittings to the correct torque.

1. Lower the wings. See "**Bleeding the Hydraulic System**" on page 12.
2. Park the tractor and the rake on a solid level surface.
3. Apply the tractor parking brake. Stop the tractor engine.
4. Move tractor remote lever back and forth several times to release all hydraulic pressure. Take the tractor key with you to prevent unauthorized starting
5. Disconnect the hydraulic hoses from the tractor and loosen the hydraulic hose clamp at the front of the tongue.
6. At the rear of the rake, remove SMV mounting bracket (1) along with the SMV sign.
7. There are two bulkhead tee fittings (2) in the bulkhead plate (3) at the rear of the frame. Remove the four wing cylinder hoses (4) connected to the bulkhead tee fittings. Fasten identification tags to hoses for identification at installation. Label the wing cylinder hoses for top and bottom.

Clean all connections before disconnecting to prevent contamination. Place caps and plugs in all hoses and fittings.

8. Remove the bulkhead plate. Keep the hardware.
9. Remove two tongue hoses (5) from the bulkhead tee fittings. Fasten identification tags to the hoses for identification at installation. Label the hoses as per top and bottom.
10. Remove and keep the two bulkhead tee fittings from the bulkhead plate. Discard the bulkhead plate.

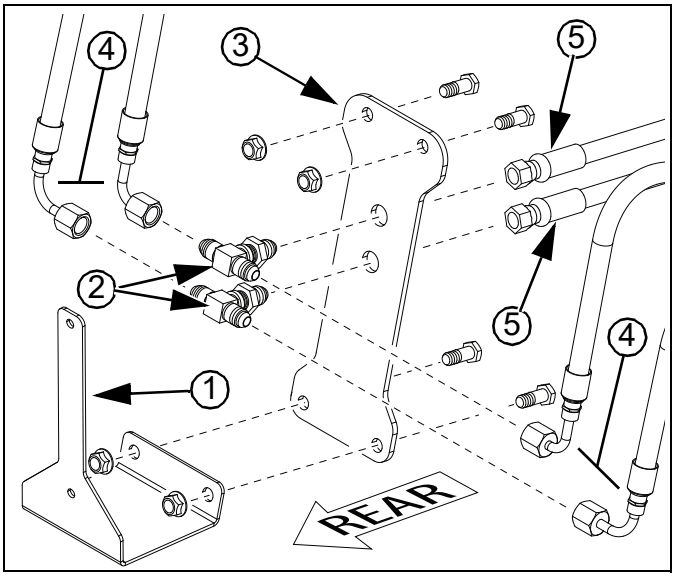

Figure 14
Removing the Bulkhead Plate

38945

Refer to Figure 15

11. Attach the bulkhead tee fittings (1) removed earlier, to the new (single or dual) kicker mounting plate (2). (The kicker mounting plate replaces the bulkhead plate.) Rotate the bulkhead tee fittings horizontally and tighten securely.
12. Connect the tongue hoses (3) to the bulkhead tee fittings. Tighten the connections.
13. Fasten kicker mounting plate onto frame using hardware (4) removed earlier.
14. Attach a new tee fitting (5) on left-hand side of the top bulkhead tee. Rotate the branch of the tee fitting to approximately 60° above horizontal. Tighten the connection.
15. Attach a new tee fittings (6) on left-hand side of the bottom bulkhead tee. Rotate the bottom tee fitting to approximately 45° above horizontal. Tighten the connection.
16. Connect the hoses (7) from the left-hand wing cylinder to the left-hand side of the new tee fittings. Tighten the connections.
17. Connect the hoses (8) from the right-hand wing cylinder to bulkhead tees. Tighten the hoses.

Refer to Figure 16

18. Install the pivot bushings (1) in the (single or dual) kicker arm (2).
19. Slide the (single of dual) kicker arm into the (single or dual) kicker lift (3).
20. Slide the assembly onto the existing kicker mounting plate (4),
21. Align the holes and install the clevis pin (5).
22. Secure the clevis pin with the washer (6) and cotter pin (7).
23. Hook one end of the spring (8) into the hole on the kicker mount.
24. Install a nut (9) and then a washer (10) onto the eye bolt (11).
25. Hook the remaining end of the spring through the loop in the eye bolt.
26. Insert the eye bolt through the hole in the kicker arm and install the remaining washer (10) and nut (9).

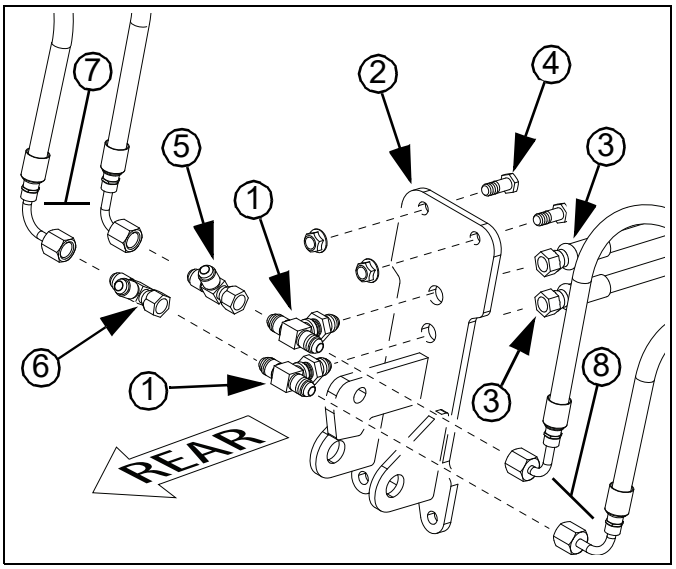

Figure 15 38954
Kicker Mounting Plate Installation

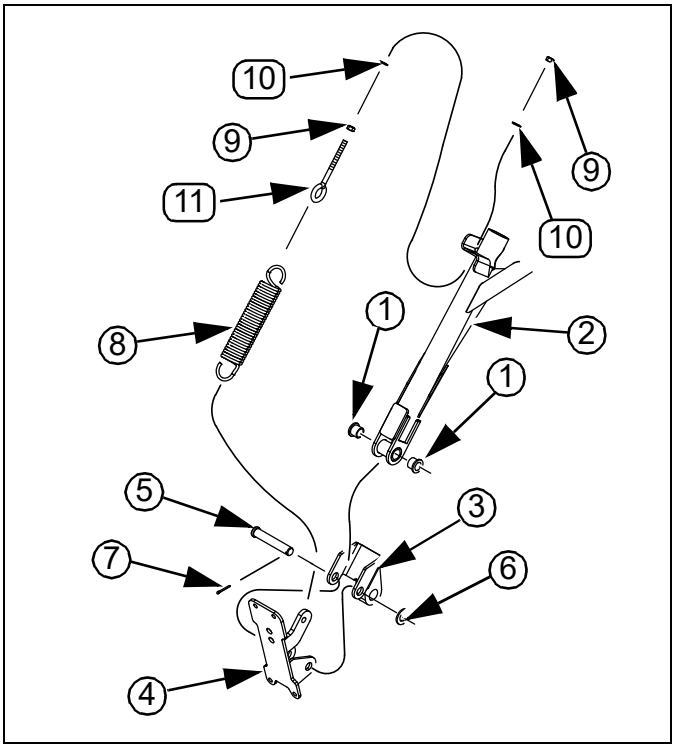

Figure 16 38955
Kicker Arm Installation

Refer to Figure 17

27. Measure the distance (A) from the end of the eyebolt to the outer face of the inner jam nut. Adjust the nuts so the distance 2.5 in (63.5 mm).
28. Tighten the nuts on the eyebolt without changing the adjustment.

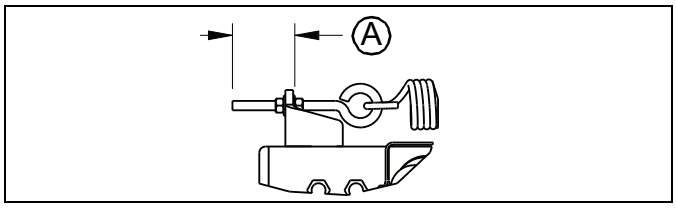

Figure 17 38941
Down Pressure Adjustment

Refer to Figure 18

29. Install the orifice (1) in the rod end of the kicker lift cylinder (2). The slot in the orifice must be away from the kicker lift cylinder.
30. Install the elbows (3) on the kicker lift cylinder oriented towards the cylinder rod. The elbow on the base end must be pointed slightly down.
31. Attach the base end of the kicker lift cylinder to the lug on the bottom of the mainframe. The elbows must be toward the right-hand side of the rake. Use the clevis pin and keeper supplied with the kicker lift cylinder.
32. Attach the rod end of the kicker lift cylinder to the lug on the kicker lift (4). Use the clevis pin and keeper supplied with the kicker lift cylinder.

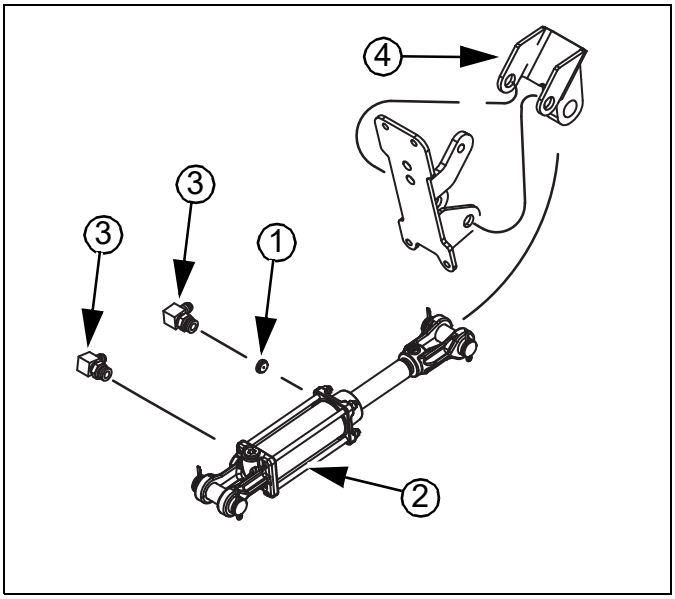

Figure 18 38945
Installing the Kicker Lift Cylinder

Refer to Figure 19

33. Turn the handle (1) of the kicker lockout valve (2) to the closed position as shown. When installed, the handle will be facing the rear of the rake.
34. Install the kicker lockout valve on the male to male elbow (3).
35. Install the male to female elbow (4) in the left-hand end of the kicker lockout valve.
36. Attach the female end of the elbow (4) to the top fitting on the new tee fitting (5). The kicker lockout valve will be oriented to the right, or above the bulkhead tee fitting.

CAUTION

The lockout valve will not function correctly unless installed as directed.

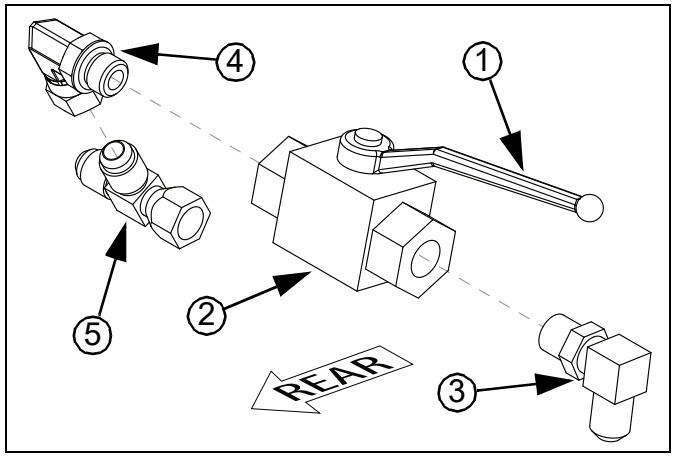

Figure 19 38947
Installing the Kicker Lockout Valve

Refer to Figure 20

37. Find the hose (1) in the kit that has a straight fitting on both ends. Loosely connect one end of the hose to the elbow (2) in the base end of the kicker lift cylinder. Connect the other end of the hose to the elbow (3) on the kicker lockout valve.
38. Find the other hose in the kit. Loosely connect the elbow end of the hose (4) to the bottom tee fitting (5). Attach the straight end of the hose to the elbow (6) in the rod end of the kicker lift cylinder.
39. Adjust elbows and tee fittings as required so that hoses are not rubbing any sharp edges.
40. Make sure all connections are tight.

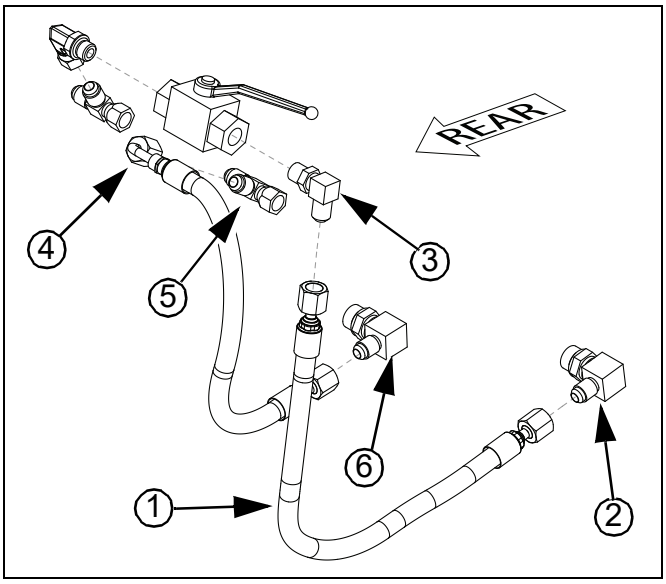

Figure 20
Kicker Hydraulics

38949

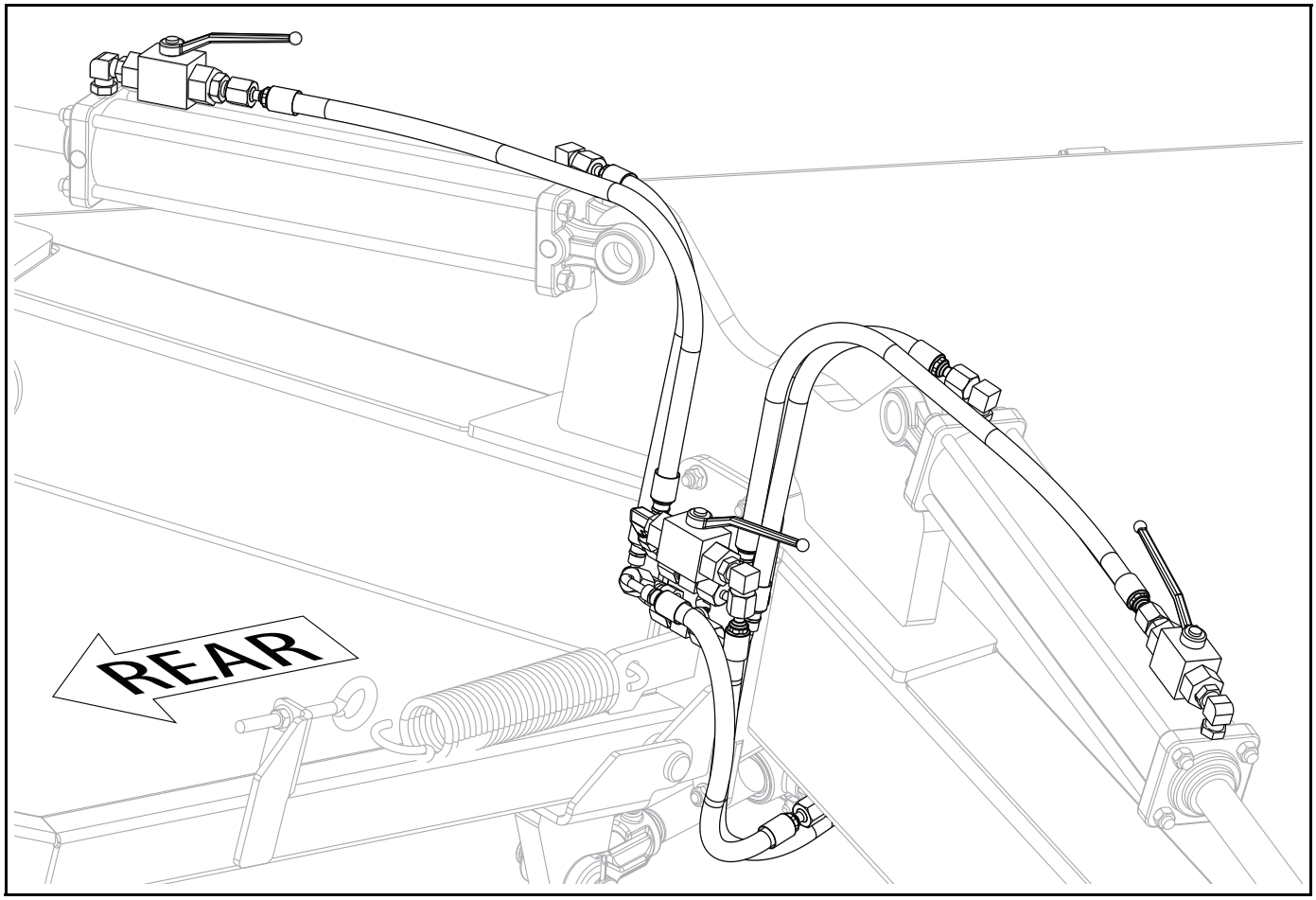

The hydraulics, once installation is finished, should have hoses and valves positioned as per the image above.

Refer to Figure 21

41. Install new SMV bracket (1) at two holes (2) on left-hand transport wheel strut. (If taillights are present, taillight brackets use the same holes.)
42. Move the SMV sign (3) from the old SMV bracket to the new SMV bracket.

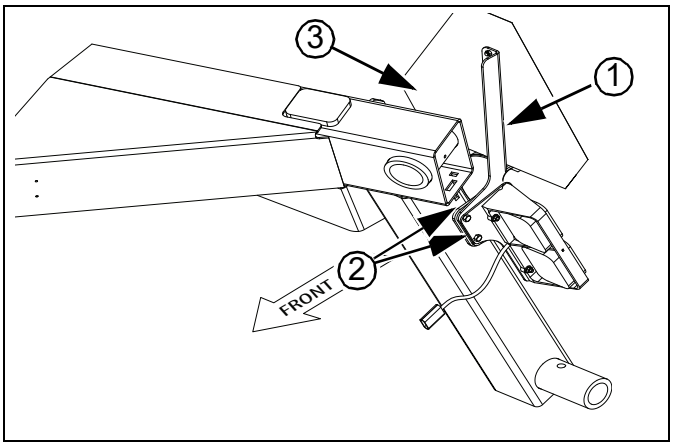

Figure 21 TP-71587
SMV Installation (With optional kicker)

Refer to Figure 22

43. Install a rake wheel (1) on the wheel studs of a hub (2). The side of the rake wheel with the series of small plates (3) must face towards the hub (2).

📖 Wheel tines that face towards the front of the machine must have tine ends (1) pointing upwards. If the ends point downwards, flip the wheel around and mount to hub so metal plates (3) face inwards.

44. Install the flange lock nuts (4) on the wheel studs and tighten to 35 N m (26 lb ft).
45. If the kit is for a double kicker, install the second rake wheel.
46. Adjust hoses at hitch end of tongue to length required and tighten hose clamp at the front of the tongue.
47. Connect the hoses to a hydraulic remote valve on tractor.
48. Fold and unfold the wings and kicker and check for hydraulic fluid leaks. Correct as necessary.
49. Close the kicker lockout valve with the kicker in the raised position. Verify the kicker does not move when the rake wings are unfolded.
50. Open the kicker lockout valve and lower the kicker.
51. Apply the tractor parking brake. Stop the tractor engine and take the key with you to prevent unauthorized starting.

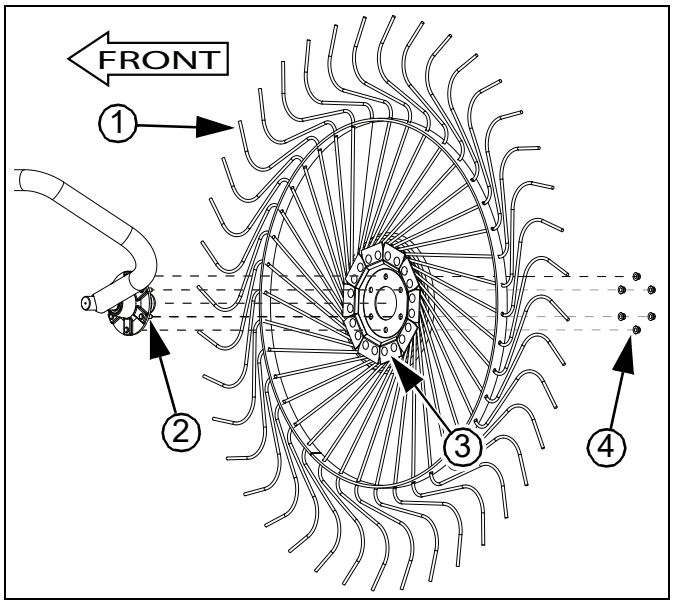

Figure 22 38940
Rake Wheel Installation

Refer to Figure 23

52. Check the down pressure on the kicker wheel(s). To adjust the down pressure:
    a. Increase distance (A) to increase the flotation pressure.
    b. Decrease distance (A) to decrease the flotation pressure.
    c. Tighten the nuts on the eyebolt without changing the adjustment.

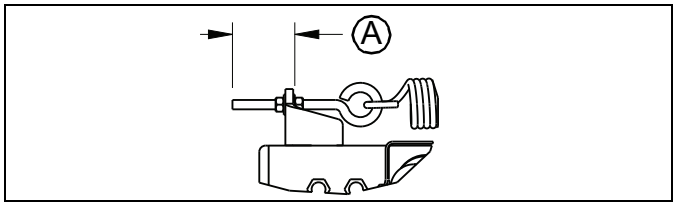

Figure 23 38941
Down Pressure Adjustment

Installation of a Wind Screen Kit

Refer to Figure 24

The wind screens (1) are used to reduce the effect of wind on the crop during raking. The kit includes cable ties (2) for attaching the wind screens to the rake wheels. To install the wind screens, do the following:

1. Place wind screen on the side of the rake wheel closest to the rake frame. Use the slot in the wind screen to go around the rake arm.
2. Center the wind screen on the rake wheel.
3. There are six pairs of holes in each wind screen. Use the cable ties to fasten the windscreens to the rake wheel at each pair of holes.
4. Repeat the procedure for each of the wind screens.

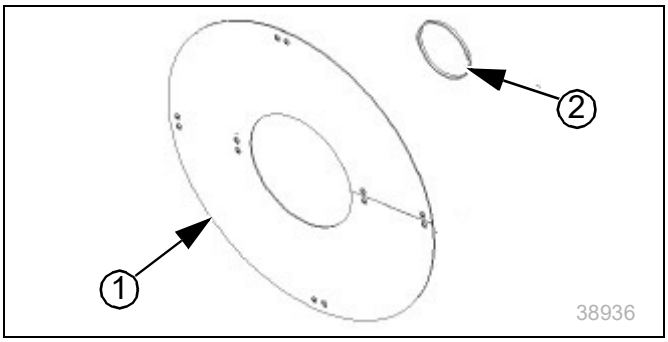

Figure 24
Wind Screen

38940

Reference Information

Specifications

Model		RA108CR	RA110CR	RA210CR	RA212CR
Transport Length	A	645 cm (21’-2”)	645 cm (21’-2)”	757 cm (24’-10”)	757 cm (24’-10”)
Working Length (Max.)	B	655 cm (21’-6”)		772 cm (25’4”)	
Transport Width	C	284 CM (9’-4”)	290 cm (9’-6”)	279 cm (9’-2”)	282 cm (9’-3”)
Transport Height, Min.	D	244 cm (8’)	244 cm (8’)	254 cm (8’-4”)	254 cm (8’-4”)
Transport Height, Max.	E	257 cm (8’-5”)	267 cm (8’-9”)	292 cm (9’-7”)	302 cm (9’-11”)
Min. Working Width	F	478 cm (15’-8”)	589 cm (18’-4”)	549 cm (18’)	640 cm (21’)
Max. Working Width	G	508 cm (16’-8”)	620 cm (20’-4”)	640 cm (21’)	762 cm (25’)
Min. Windrow		86 cm (34 in)	86 cm (34 in)	91 CM (36 in)	86 cm (34 in)
Max. Windrow		183 cm (72 in)	183 cm (72 in)	226 cm (89 in)	226 cm (89 in)
Working Height		140 cm (55 in)			
Typical Weight w/o Options		662 kg (1460 lb)	744 kg (1640 lb)	812 kg (1790 lb)	894 kg (1970 lb)
Wing Spread		NA		One hole changes windrow and working width 15 to 18 cm (6 to 7 in)	
Hydraulic Circuits		Closed-center or Open-center, one remote			
Hydraulic Power Required		12410 kPa, 38 L/min (1800 psi, 10 gpm)			
Minimum Tractor hp		30 hp	40 hp	40hp	50 hp

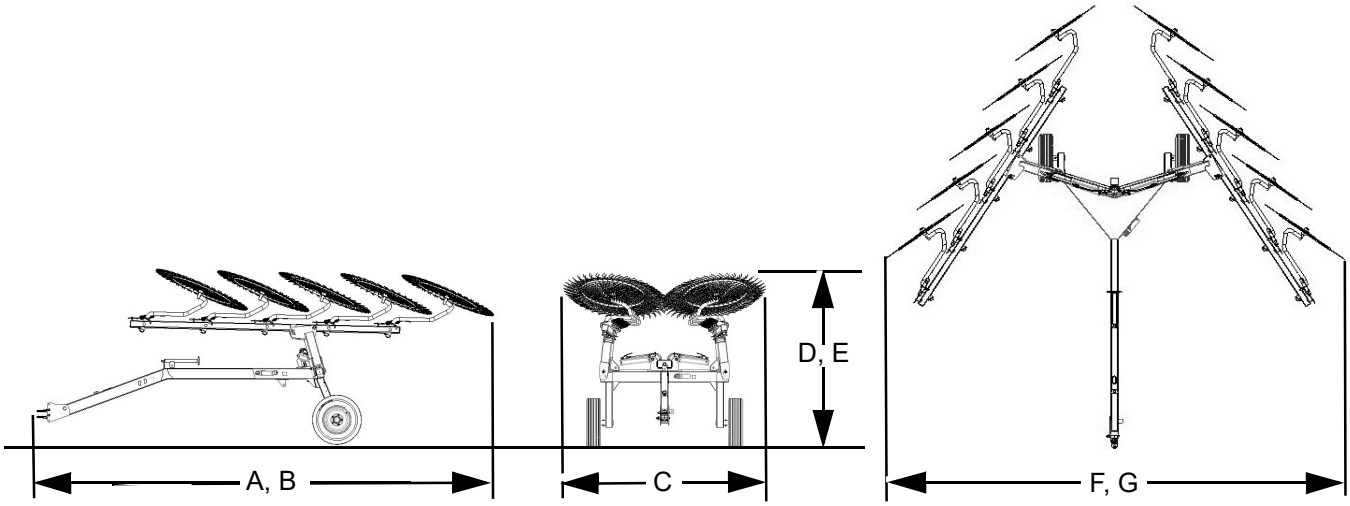

38963 38962 38967

Torque Values Chart

Bolt Size	Bolt Head Identification					
	Grade 2		Grade 5		Grade 8	
in-tpi[a]	N-m[b]	ft-lb[d]	N-m	ft-lb	N-m	ft-lb
1/4-20	7.4	5.6	11	8	16	12
1/4-28	8.5	6	13	10	18	14
5/16-18	15	11	24	17	33	25
5/16-24	17	13	26	19	37	27
3/8-16	27	20	42	31	59	44
3/8-24	31	22	47	35	67	49
7/16-14	43	32	67	49	95	70
7/16-20	49	36	75	55	105	78
1/2-13	66	49	105	76	145	105
1/2-20	75	55	115	85	165	120
9/16-12	95	70	150	110	210	155
9/16-18	105	79	165	120	235	170
5/8-11	130	97	205	150	285	210
5/8-18	150	110	230	170	325	240
3/4-10	235	170	360	265	510	375
3/4-16	260	190	405	295	570	420
7/8-9	225	165	585	430	820	605
7/8-14	250	185	640	475	905	670
1-8	340	250	875	645	1230	910
1-12	370	275	955	705	1350	995
1 1/8-7	480	355	1080	795	1750	1290
1 1/8-12	540	395	1210	890	1960	1440
1 1/4-7	680	500	1520	1120	2460	1820
1 1/4-12	750	555	1680	1240	2730	2010
1 3/8-6	890	655	1990	1470	3230	2380
1 3/8-12	1010	745	2270	1670	3680	2710
1 1/2-6	1180	870	2640	1950	4290	3160
1 1/2-12	1330	980	2970	2190	4820	3560

Bolt Size	Bolt Head Identification					
	Class 5.8		Class 8.8		Class 10.9	
mm x pitch[c]	N-m	ft-lb	N-m	ft-lb	N-m	ft-lb
M 5 X 0.8	4	3	6	5	9	7
M 6 X 1	7	5	11	8	15	11
M 8 X 1.25	17	12	26	19	36	27
M 8 X 1	18	13	28	21	39	29
M10 X 1.5	33	24	52	39	72	53
M10 X 0.75	39	29	61	45	85	62
M12 X 1.75	58	42	91	67	125	93
M12 X 1.5	60	44	95	70	130	97
M12 X 1	90	66	105	77	145	105
M14 X 2	92	68	145	105	200	150
M14 X 1.5	99	73	155	115	215	160
M16 X 2	145	105	225	165	315	230
M16 X 1.5	155	115	240	180	335	245
M18 X 2.5	195	145	310	230	405	300
M18 X 1.5	220	165	350	260	485	355
M20 X 2.5	280	205	440	325	610	450
M20 X 1.5	310	230	650	480	900	665
M24 X 3	480	355	760	560	1050	780
M24 X 2	525	390	830	610	1150	845
M30 X 3.5	960	705	1510	1120	2100	1550
M30 X 2	1060	785	1680	1240	2320	1710
M36 X 3.5	1730	1270	2650	1950	3660	2700
M36 X 2	1880	1380	2960	2190	4100	3220

a. in-tpi = nominal thread diameter in inches-threads per inch

b. N· m = newton-meters

c. mm x pitch = nominal thread diameter in mm x thread pitch

d. ft-lb = foot pounds

Torque tolerance + 0%, -15% of torquingvalues. Unless otherwise specified use torquevalues listed above. 25199

Tire and Wheel Information

Tire and Wheel Information Chart		
Tire Size	Inflation	Wheel Hardware Torque
ST205/75R15 (Load 1820)	414 kPa (60 psi)	115 N m (85 lb-ft)

Tire Warranty Information

All tires are warranted by the original manufacturer of the tire. Tire warranty information is found in the brochures included with your Operator's and Parts Manuals or online at the manufacturer's web sites listed below. For assistance or information, contact your nearest Authorized Farm Tire Retailer.

ManufacturerWeb site
Firestonewww.firestoneag.com
Gleasonwww.gleasonwheel.com
Titanwww.titan-intl.com

Hydraulic Connectors and Torque

Refer to Figure 25 (a hypothetical fitting)

Leave any protective caps in place until immediately prior to making a connection.

① **NPT** - National Pipe Thread
Note tapered threads, no cone/flare, and no O-ring.
Apply liquid pipe sealant for hydraulic applications.
Do not use tape sealant, which can clog a filter and/or plug an orifice.

② **JIC** - Joint Industry Conference (SAE J514)
Note straight threads ④ and the 37° cone ⑤ on “M” fittings (or 37° flare on “F” fittings).
Use no sealants (tape or liquid) on JIC fittings.

③ **ORB** - O-Ring Boss (SAE J514)
Note straight threads ⑥ and elastomer O-Ring ⑦.
Prior to installation, to prevent abrasion during tightening, lubricate O-Ring with clean hydraulic fluid.
Use no sealants (tape or liquid) on ORB fittings.
ORB fittings that need orientation, such as the ell depicted, also have a washer ⑧ and jam nut ⑨ (“adjustable thread port stud”). Back jam nut away from washer. Thread fitting into receptacle until O-Ring contacts seat. Unscrew fitting to desired orientation. Tighten jam nut to torque specification.

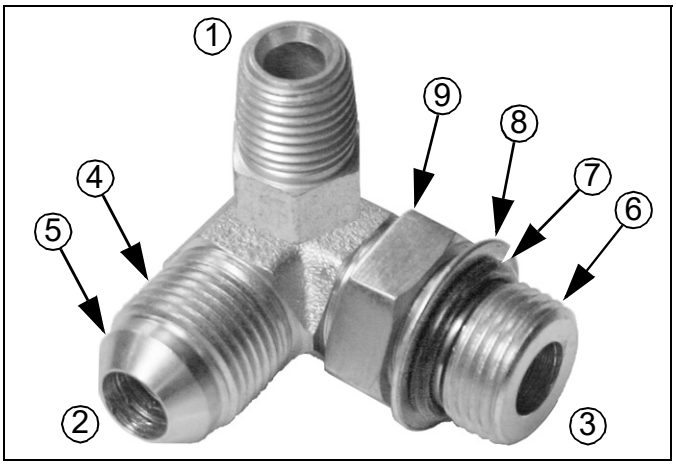

Figure 25
Hydraulic Connector ID
31282

Fittings Torque Values		
Fitting Call Size	N-m	
$^1/_4$ NPT	1.5-3.0 turns past finger tight	
$^5/_{16}$ JIC	24 to 27	
$^5/_{16}$ ORB w/jam nut	16 to 22	
$^5/_{16}$ ORB straight	24 to 32	
$^3/_4$ JIC	37 to 53	
$^3/_4$ ORB w/jam nut	27-41	

Hydraulic Diagrams

Without Optional Kicker

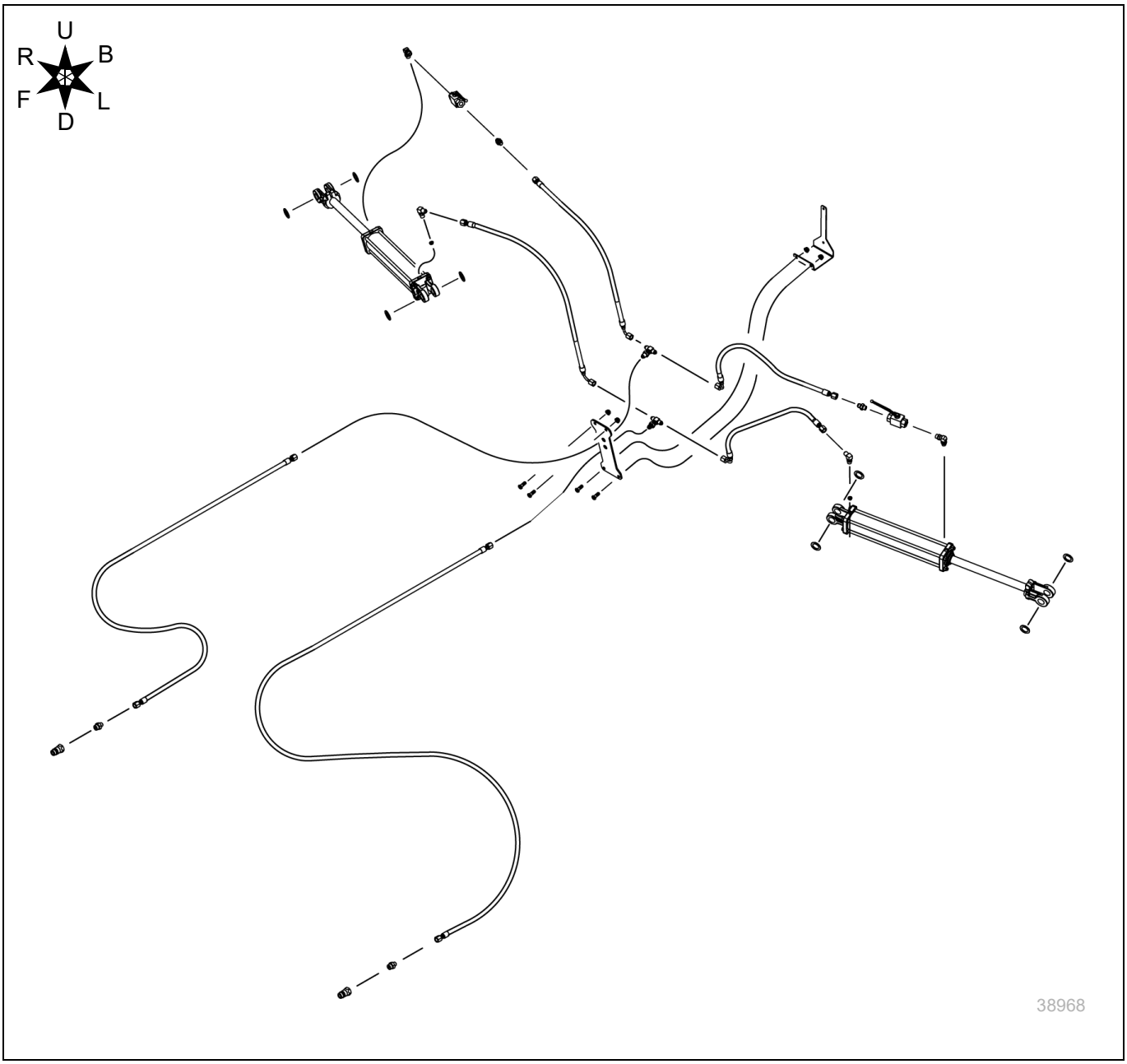

With Optional Kicker

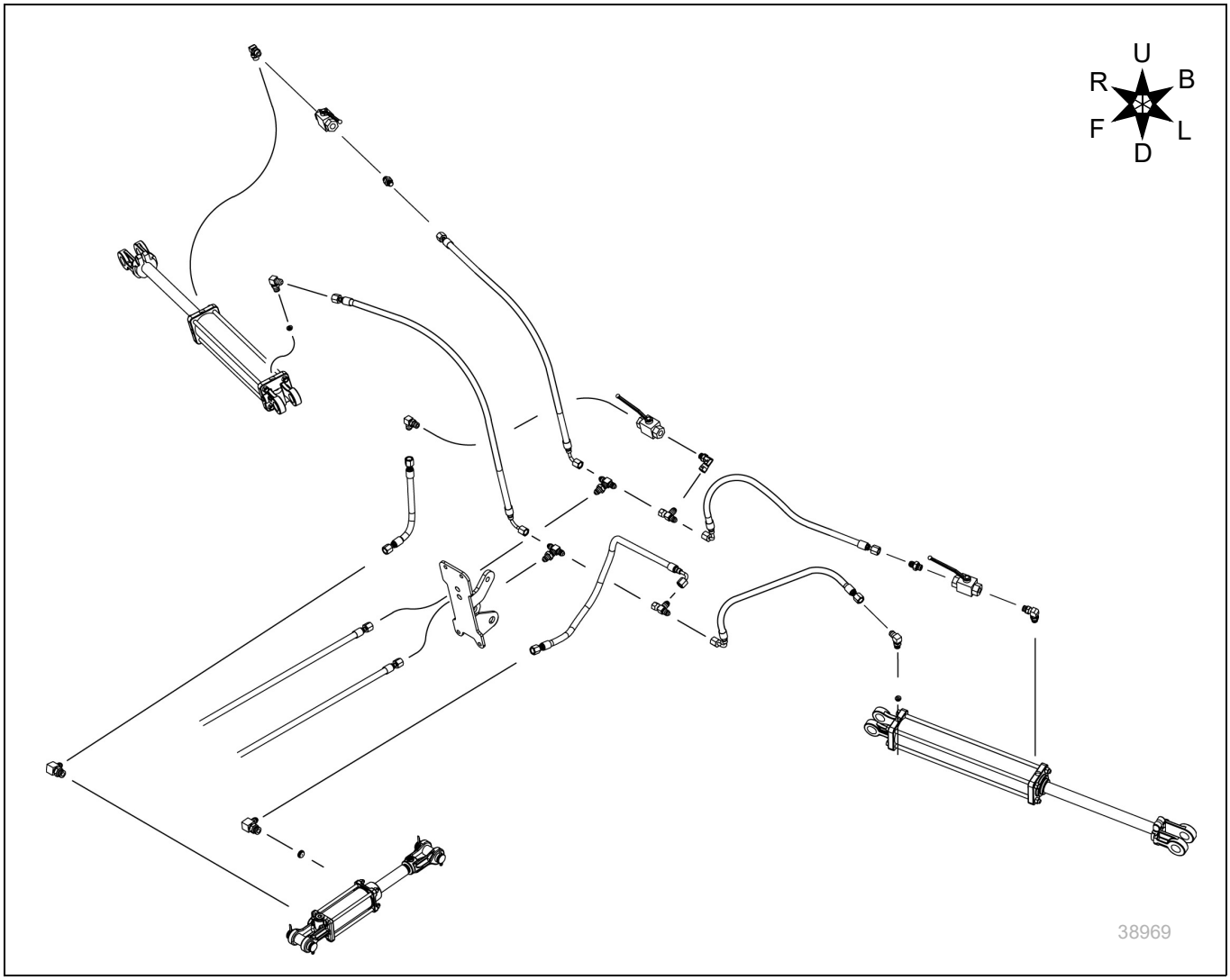

Wiring Diagram

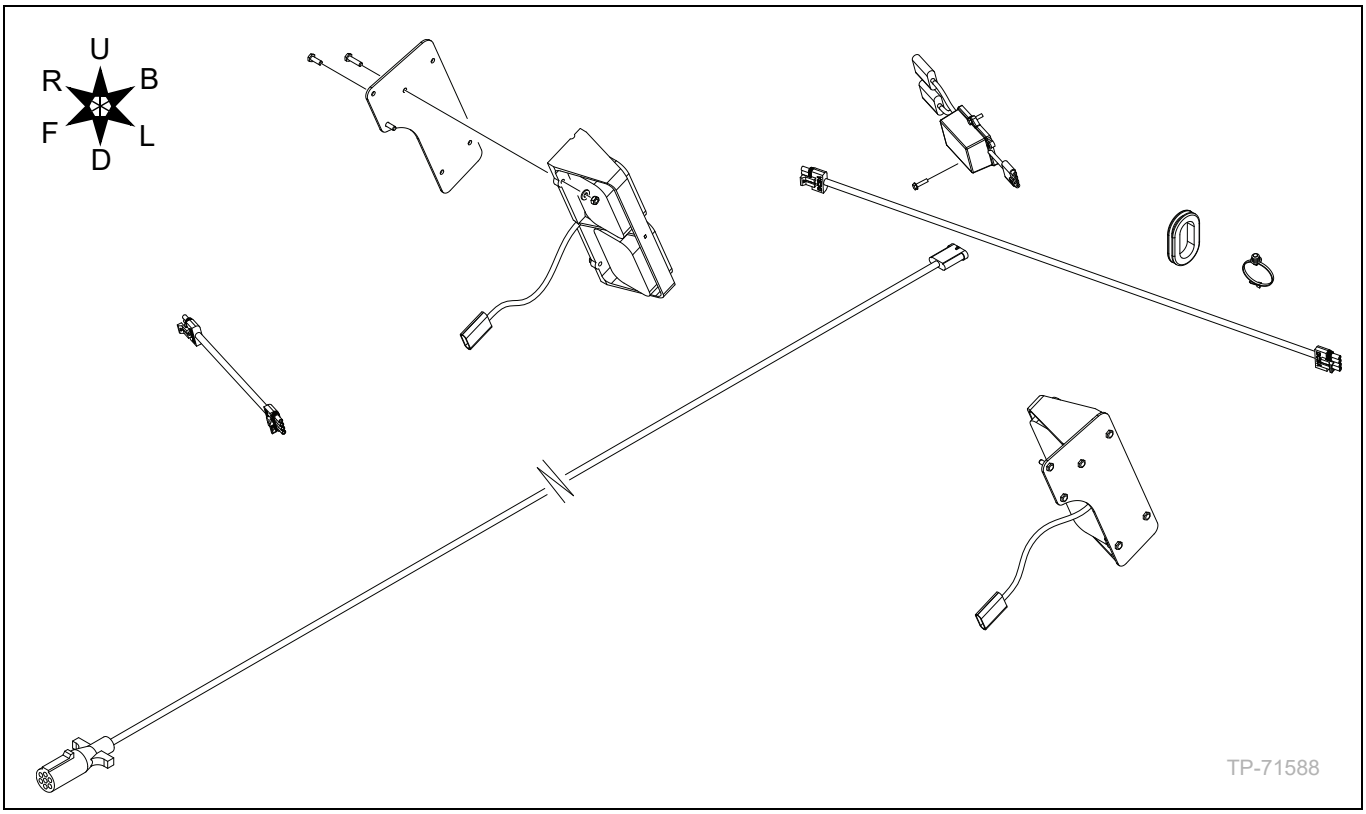

Index

A
arms for the rake wheels 13
B
bag of hardware 15
C
cable ties 22
CAUTION, defined 2
center 8
center of gravity ..... 8 . 9
children 4
clothing 2
covered models 1
D
DANGER, defined 2
delivery 6
detent pin 10
dock 7
Document 1
drugs or alcohol 5
F
fire 2
fumes 5
H
hardware 15
headphones 2
hearing 2
high pressure fluids 3
hydraulic circuits 23
hydraulic connectors 25
hydraulic connectors and torque 25
hydraulic diagrams 26
hydraulic power required 23
hydraulic safety 3
hydraulic system 12
I
inflation 24
installation of a kicker kit 15
installing the rake wheels 13
installing the wing arms 11
installing the wings 13
Introduction 1
J
JIC 25
Joint Industry Conference 25
J514 25
K
kicker arm 18
kicker kit 17
kicker lockout valve 19
kicker mounting plate 18
kit installations 14
kit locations 14
L
leaks ..... 3 . 12
lights 3
lockout valves 12
lug nuts 10
M
mainframe 8
mainframes 8
maintenance safety 5
max. windrow 23
max. working width 23
medical assistance 3
minimum tractor hp 23
min. windrow 23
min. working width 23
N
National Pipe Thread 25
NPT 25
O
ORB 25
orifice 19
O-Ring Boss 25
P
pallet 7
plastic sealant tape 12
prepare for emergencies 2
protective equipment 2
R
rake wheels 13
riders 4
S
SAE J514 25
safety chain 3
safety lights and devices 3
safety symbol 2
seat belt and ROPS 4
serial number 7
shipping 8
shipping crate 13
shipping stand ..... 8 . 9
shutdown 4
SMV bracket 21
SMV mounting bracket 17
SMV sign 17
specifications 23
square plug 15
storage 4
symbol, safety 2
T
tables
  document family 1
  fittings torque 25
  models covered 1
  torque values 24
tape, pipe 12
tipping ..... 4 . 5
tire inflation 24
tire safety 3
tire size 24
tires 3
tools 6
trailer bed 9
transport height, max. 23
transport height, min. 23
transport length 23
transport machinery safely 4
transport speed 4
transport wheels 10
transport width 23
typical weight w/o options 23
U
U-bolts 9
unauthorized starting 5
unload 7
unloading the mainframes 9
unloading the wings 8
URLs, tires 24
W
WARNING, defined 2
warranty 24
welding 5
wheel hardware torque 24
wheel studs ..... 13 . 21
wind screen kit 22
windshields 22
wing ..... 8 . 13
wing arms 11
wing cylinder 11
wing extension tube 15
wing spread 23
wiring diagram 28
with optional kicker 27
work space 6
working height 23
working length (max.) 23
Numerics
25 mph 4
40 kph 4
5 mph ..... 4 . 5
8 kph ..... 4 . 5

KUBOTA Corporation is...

Since its inception in 1890, KUBOTA Corporation has grown to rank as one of the major firms in Japan. To achieve this status, the company has through the years diversified the range of its products and services to a remarkable extent. 30 plants and 35000 employees produce over 1000 different items, large and small.

All of these products services, however, are unified by one central commitment: KUBOTA makes products that are basic national necessities. Products which are indispensable. Products which are intended to help individuals and nations fulfill the potential inherent in their environment. KUBOTA is the world's basic necessities giant.

These necessities includes water supply, food from the soil and sea, industrial development, architecture and construction, and transportation. Thousands of people depend on KUBOTA's know-how, technology, experience, and customer service. Our promise is that you, too, can depend on KUBOTA.

KUBOTA TRACTOR CORPORATION
U.S.A. Corporate : 1000 Kubota Drive, Grapevine, TX 76051
Telephone : (817) 756-1171
Western Division : 1175 S. Guild Avc., Lodi, CA 95240
Telephone : (209) 334-9910
Central Division : 14855 FAA Blvd., Fort Worth, TX 76155
Telephone : (817) 571-0900
Northern Division : 6300 at One Kubota Way, Groveport, OH 43125
Telephone : (614) 835-1100
Southeast Division : 1025 Northbrook Parkway, Suwanee, GA