Pre-Delivery Manual

SD2600, SD3000, and SD3300
26-, 30-, and 33-Foot Short Disk™

Great Plains
Manufacturing, Inc.
www.greatplainsmfg.com

Read the operator manual entirely. When you see this symbol, the subsequent instructions and warnings are serious - follow without exception. Your life and the lives of others depend on it!

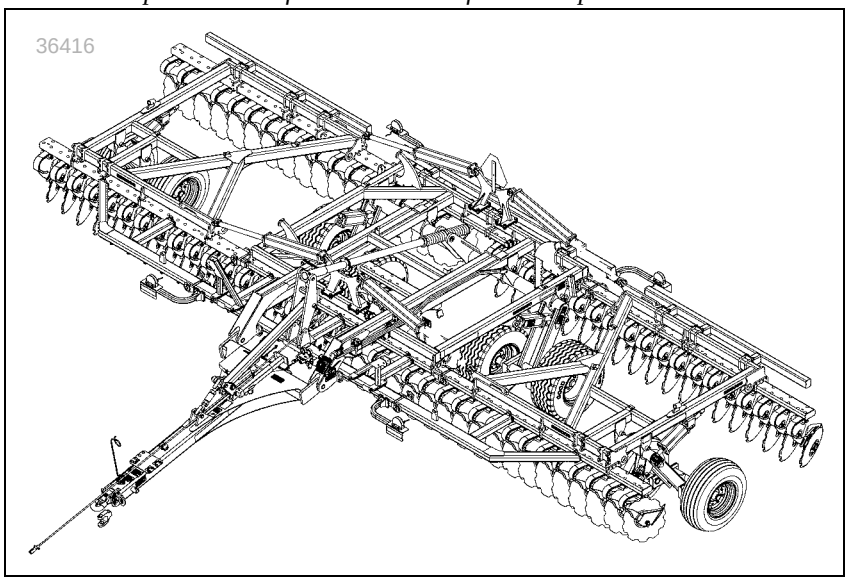

Illustrations may show alternate widths and/or optional equipment not supplied with ordered unit.

ORIGINAL INSTRUCTIONS

EN

© Copyright 2017
Printed 2017-05-18 559-129Q

Machine Identification

Record your machine details in the log below. If you replace this manual, be sure to transfer this information to the new manual.

If you, or the dealer, have added Options not originally ordered with the machine, or removed Options that were originally ordered, the weights and measurements are no longer accurate for your machine. Update the record by adding the machine weight and measurements on page 58add page number here with the Option(s) weight and measurements.

Model Number	
Serial Number	
Machine Height	
Machine Length	
Machine Width	
Machine Weight	
Year of Construction	
Delivery Date	
First Operation	
Accessories	

Dealer Contact Information

Name: _____

Street: _____

City/State: _____

Telephone: _____

Email: _____

Dealer's Customer No.: _____

Manual Family QRC

The QR Code (Quick Response) to the left will take you to this machine's family of manuals. Use your smart phone or tablet to scan the QR Code with an appropriate App to begin viewing.

Dealer QRC

The QR Code (Quick Reference) to the left will take you to available dealers for Great Plains products. Refer to the Parts Manual QR Locater for detailed instructions.

Table of Contents

Important Safety Information....1
Introduction....5
Description of Unit....5
Intended Usage....5
Using This Manual....5
Models Covered....5
Document Family....5
Definitions....5
Assembly and Setup Assistance....6
Further Assistance....6
Preparation....7
Tools Required....7
Pre-Assembly Checklist....7
Shipping and Unloading....8
What's On The Truck....8
Shipment Inventory....8
Unloading....9
Location Requirements....9
Unload Smaller Items First....9
Unload Wings....9
Unload Center Section....10
Release Truck....10
Assembly....11
Remove Shipping Plates....11
Install Center Brace Bar....11
Install Front Trusses....12
Install Down-Pressure Valve....13
Install Wing Fold Lock Valve....13
Install Depth Control Valve....14
Install Depth Stop Tube....14
Install Level Bar Linkage....15
Install Tongue....18
Tongue Leveling Tube....18
Tongue Hose Routing....19
Hose Order at Clamps....19
Route Lift Hoses on Hitch....20
Route Fold Hoses on Hitch....20
Route Level Hoses on Hitch (Option)....21
Charge and Bleed....22
Charge and Bleed Fold System....22
Charge Lift System....22
Cycle Level System (Option)....22
Center Section Complete....22
Wing Assembly....23
Unstack Wings....23
Stack Breakdown....23
Remove Shipping Plates....23
Remove Shipping Stands....24
Connect A Wing....24
Install Wing Brace Bars....25
Connect Fold Cylinders....26
Connect Wing Lift Cylinders....26
Route Wing Hoses....26
Install Cylinder....27
Check Lift....27
Harnesses and Lights....28
Route and Connect Harnesses....28
Short Disk™ Harness Connections....29
Harness Routing....30
Install Front LED Lights (Amber)....31
Install Light Bracket....31
Install Amber LED Lights....31
About Rear Lights....31
Install Proximity Sensors....32
First Fold....32
Install Sensors....32
Option Installation....33
Install Light Brackets....33
Install Weights....34
Install Wing Gauge Wheels....35
Install Weldment Assembly....35
Gauge Wheel Pre-Level....35
Install Attachment Bar....36
Install Center Bar....36
Install Attachment Bar Light Brackets....36
Install Wing Bars....37
Install Rolling Basket....38
Install Attachment Bar for Basket....38
Install Drag Arms....38
Install Tines....42
Install Baskets....42
Install Cast Roller....43
Install Roller Pivots....43
Install Roller Frames....44
Install Cylinders....45
Install Cast Roller Hydraulics....45
Install Roller Gangs....51
Install (Roller) Light Bracket....56
Install Rear Lights....57
Install Amber LED Light....57

© Copyright 2014, 2015, 2016, 2017 All rights Reserved

Great Plains Manufacturing, Inc. provides this publication "as is" without warranty of any kind, either expressed or implied. While every precaution has been taken in the preparation of this manual, Great Plains Manufacturing, Inc. assumes no responsibility for errors or omissions. Neither is any liability assumed for damages resulting from the use of the information contained herein. Great Plains Manufacturing, Inc. reserves the right to revise and improve its products as it sees fit. This publication describes the state of this product at the time of its publication, and may not reflect the product in the future.

Trademarks of Great Plains Manufacturing, Inc. include: AccuShot, Max-Chisel, Row-Pro, Singulator Plus, Short Disk, Swath Command, Terra-Tine, Ultra-Chisel, and X-Press.
Registered Trademarks of Great Plains Manufacturing, Inc. include: Air-Pro, Clear-Shot, Discovator, Great Plains, Land Pride, MeterCone, Nutri-Pro, Seed-Lok, Solid Stand, Terra-Guard, Turbo-Chisel, Turbo-Chopper, Turbo-Max, Turbo-Till, Ultra-Till, Whirlfilter, and Yield-Pro.
Brand and Product Names that appear and are owned by others are trademarks of their respective owners.

Printed in the United States of America

Install Red LED Light.....57
Close-Out 57
Appendix A - Reference Information 58
Torque Values Chart 58
Tire Inflation.....59

Important Safety Information

Look for Safety Symbol

The SAFETY ALERT SYMBOL indicates there is a potential hazard to personal safety involved and extra safety precaution must be taken. When you see this symbol, be alert and carefully read the message that follows it. In addition to design and configuration of equipment, hazard control and accident prevention are dependent upon the awareness, concern, prudence and proper training of personnel involved in the operation, transport, maintenance and storage of equipment.

Be Aware of Signal Words

Signal words designate a degree or level of hazard seriousness.

DANGER indicates an imminently hazardous situation which, if not avoided, will result in death or serious injury. This signal word is limited to the most extreme situations, typically for machine components that, for functional purposes, cannot be guarded.

WARNING indicates a potentially hazardous situation which, if not avoided, could result in death or serious injury, and includes hazards that are exposed when guards are removed. It may also be used to alert against unsafe practices.

CAUTION indicates a potentially hazardous situation which, if not avoided, may result in minor or moderate injury. It may also be used to alert against unsafe practices.

Prepare for Emergencies

- ▲ *Be prepared if a fire starts.*
- ▲ *Keep a first aid kit and fire extinguisher handy.*
- ▲ *Keep emergency numbers for doctor, ambulance, hospital and fire department near phone.*

Use Adequate Lifting Means

The frame sections and gangs of this machine are extremely heavy. If using multiple lifters, make sure each is rated for at least its share of the load.

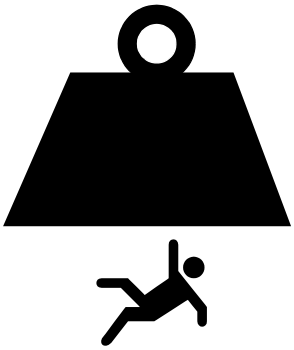

Be Familiar with Safety Decals

- *Read and understand the "**Safety Decals**" topic in the Operator manual.*
- *Read all instructions noted on the decals.*
- *Keep decals clean. Replace damaged, faded and illegible decals.*

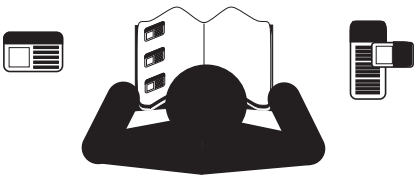

Wear Protective Equipment

- *Wear clothing and equipment appropriate for the job.*
- *Prolonged exposure to loud noise can cause hearing impairment or loss. Wear suitable hearing protection such as earmuffs or earplugs.*
- *Avoid wearing entertainment headphones while operating machinery. Operating equipment safely requires the full attention of the operator.*

Avoid High Pressure Fluids

Escaping fluid under pressure can penetrate the skin, causing serious injury.

- *Avoid the hazard by relieving pressure before disconnecting hydraulic lines.*
- *Use a piece of paper or cardboard, NOT BODY PARTS, to check for suspected leaks.*
- *Wear protective gloves and safety glasses or goggles when working with hydraulic systems.*
- *If an accident occurs, seek immediate medical assistance from a physician familiar with this type of injury.*

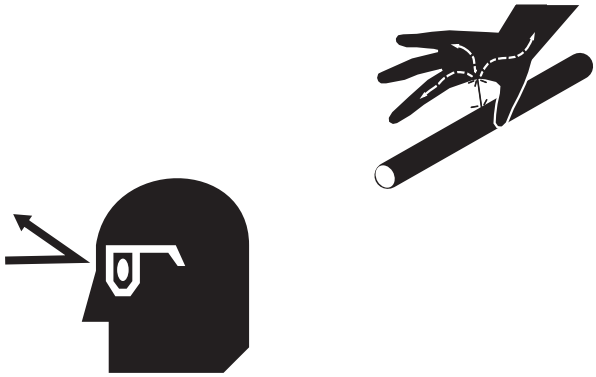

Use Safety Lights and Devices

Slow-moving tractors and towed implements can create a hazard when driven on public roads. They are difficult to see, especially at night.

- *Use flashing warning lights and turn signals whenever driving on public roads.*

Use lights and devices provided with implement.

Keep Riders Off Machinery

Riders obstruct the operator's view. Riders could be struck by foreign objects or thrown from the machine.

- *Never allow children to operate equipment.*
- *Keep all bystanders away from machine during operation.*

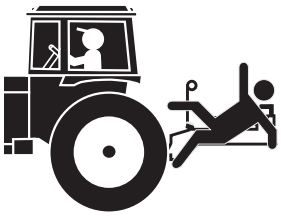

Check for Overhead Lines

The Short Disk™ requires at least
SD2600: 13 feet 8 inches (4.2 m)
SD3000 and SD3300: 15 feet (4.6 m)
vertical clearance in transport. Contacting overhead electrical lines can introduce lethal voltage levels on Short Disk™ and tractor frames. A person touching almost any metal part can complete the circuit to ground, resulting in serious injury or death. At higher voltages, electrocution can occur without direct line or body contact.

- ▲ *Avoid overhead lines during folding, unfolding, transport and parking.*

Shutdown and Storage

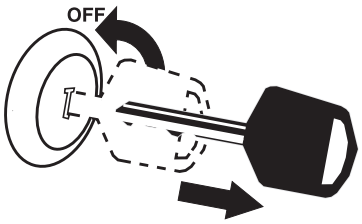

- ▲ *Lower Short Disk™, put tractor in park, turn off engine, and remove the key.*
- ▲ *Secure Short Disk™ using blocks and supports provided.*
- ▲ *Detach and store Short Disk™ in an area where children normally do not play.*

Practice Safe Maintenance

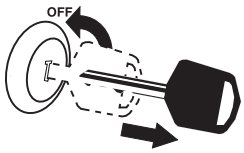

- ▲ *Understand procedure before doing work. Use proper tools and equipment. Refer to this manual for additional information.*
- ▲ *Work in a clean, dry area.*
- ▲ *Lower the Short Disk™, put tractor in park, turn off engine, and remove key before performing maintenance.*
- ▲ *Make sure all system pressure is relieved.*
- ▲ *Disconnect battery ground cable (-) before servicing or adjusting electrical systems or before welding on Short Disk™.*
- ▲ *Inspect all parts. Make sure parts are in good condition and installed properly.*
- ▲ *Remove buildup of grease, oil or debris.*
- ▲ *Remove all tools and unused parts from Short Disk™ before operation.*

Safety At All Times

Thoroughly read and understand the instructions in this manual before operation. Read all instructions noted on the safety decals.

- *Be familiar with all Short Disk™ functions.*
- *Operate machinery from the driver's seat only.*
- *Do not leave Short Disk™ unattended with tractor engine running.*
- *Do not dismount a moving tractor. Dismounting a moving tractor could cause serious injury or death.*
- *Do not stand between the tractor and Short Disk™ during hitching.*
- *Keep hands, feet and clothing away from moving parts.*
- *Watch out for wires, trees, etc., when folding and raising Short Disk™. Make sure all persons are clear of working area.*

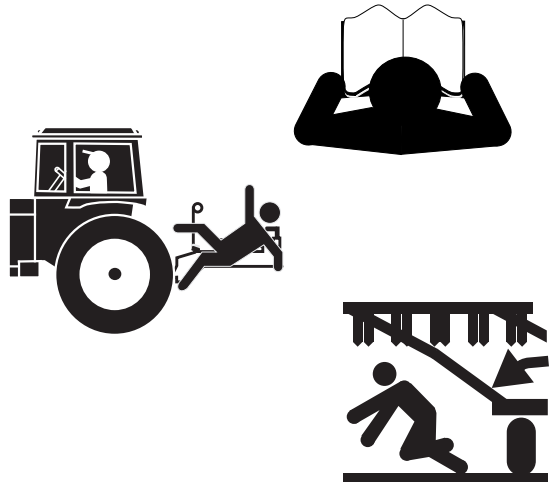

Introduction

Great Plains welcomes you to its growing family of new product owners. The 26-, 30-, and 33-Foot Short Disk™ (SD2600, SD3000, and SD3300) has been designed with care and built by skilled workers using quality materials. Proper setup, maintenance, and safe operating practices will help you get years of satisfactory use from the machine.

Description of Unit

The Short Disk™ is a 3-section pull-type primary tillage implement. The maximum unfolded span with rolling baskets attached is:

SD2600: 29 feet 8 inches (9.1 m)
SD3000: 32 feet 3 inches (9.8 m)
SD3300: 35 feet 11 inches (10.9 m)

See the Operator manual for full specifications.

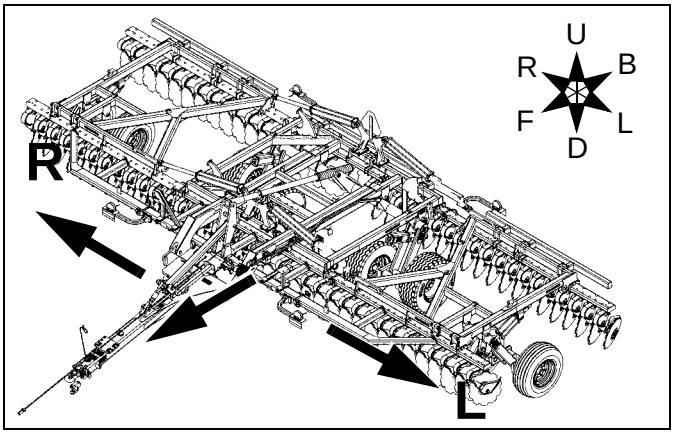

Figure 1
Short Disk™

36416

Intended Usage

Use the Short Disk™ for primary and secondary tillage. Do not modify the Short Disk™ for use with attachments other than Great Plains options and accessories specified for use with the SD2600, SD3000 and SD3300 implement.

Using This Manual

This manual was written to help you assemble and prepare the new machine for the customer. The manual includes instructions for assembly and setup. Read this manual and follow the recommendations for safe, efficient and proper assembly and setup.

An Operator and Parts manual are also provided with the new machine. Read and understand "**Important Safety Information**" and "**Operating Instructions**" in the Operator manual before assembling the machine. Refer to the Parts manual for proper part identification. As a reference, keep the Operator and Parts manual on hand while assembling.

The information in this manual is current at printing. Some parts may change to assure top performance.

Models Covered

SD2600	26-Foot Short Disk™
SD3000	30-Foot Short Disk™
SD3300	33-Foot Short Disk™

Document Family

559-129Q	Pre-Delivery Manual (this manual)
559-129M	Operator Manual
559-129P	Parts Manual

Definitions

The following terms are used throughout this manual.

Right-hand and left-hand as used in this manual are determined by facing the direction the machine will travel while in use unless otherwise stated. An orientation rose in some line art illustrations shows the directions of: Up, Back, Left, Down, Front, Right.

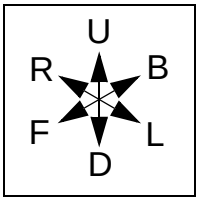

NOTICE

A crucial point of information related to the current topic. Read and follow the directions to remain safe, avoid serious damage to equipment and ensure desired field results.

🕮 Useful information related to the preceding topic.

Assembly and Setup Assistance

Pre-Delivery, Operator and Parts manuals are available on the Great Plains web site, in PDF form, at no charge.

To order additional printed copies of Pre-Delivery, Operator or Parts manuals, write to the following address. Include model numbers or manual part numbers (see page 5) in all correspondence.

If you do not understand any part of this manual or have assembly or setup questions, assistance is available.

Further Assistance

For additional help with understanding these assembly instructions or for any other assembly or setup related questions, please contact our service department at the following address:

Great Plains Service Department
1525 E. North St.
P.O. Box 5060
Salina, KS 67402-5060

Or call us at **(800) 270-9302** to speak over the phone with a service representative.

Copies of this machine's operator manual are available by mail or online. Please visit **www.greatplainsag.com** and follow the product link for information on your machine, or use the QRC code on the inside of the cover to view our publications store.

Preparation

Step-by-step instructions for assembling the implement begin in the next section of the manual. Before commencing work, review the Tools Required and Pre-Assembly Checklist to make sure you have all necessary parts and equipment.

The implement is shipped via flat bed truck. It is the dealer's responsibility to unload the new machine. Unload all equipment before beginning assembly.

NOTICE

Do not attempt any assembly work while the implement is on the truck.

The general sequence is:

Assembly

1. Unload frame sections from truck.
2. Assemble mainframe.
3. Install the tongue.
4. Charge and bleed hydraulic system.
5. Unstack wings.
6. Connect wings.
7. Install harnesses and lights.

Setup

1. Install options.
2. Install rear lights.
3. Close out

Tools Required

- basic hand tools, including torque wrench
- mobile lifter or overhead hoist with 12,000 pound (5500 kg capacity)
- 13 gallons hydraulic oil
- tractor with 2 to 4 QD remote pairs or other suitable hydraulic power source

Pre-Assembly Checklist

1. Read and understand "**Important Safety Information**" on page 1 before assembling.
4. Have at least two people on hand while assembling.
5. Make sure the assembly area is level and free of obstructions (preferably an open concrete area).
6. Have all major components accounted for.
7. Have all fasteners and pins shipped with implement.
8. Have a copy of the implement Parts Manual on hand. If unsure of proper placement or use of any part or fastener, refer to the parts manual. Refer to "**Document Family**" on page 5 for the part number of the Parts Manual.
9. Check that all working parts are moving freely, bolts are tight, and cotter pins are spread.
10. Check that all safety labels and reflectors are correctly located and legible. Replace if improperly located or damaged. Refer to **Safety Decals**, in the "**Important Safety Information**" section of the implement Operator's Manual.
11. Inflate tires to recommended pressure as listed on the "**Tire Inflation**" on page 59.
12. Tighten wheel bolts as specified on "**Torque Values Chart**" on page 58.

Shipping and Unloading

What's On The Truck

Items that are individually unloaded include:

- ❑ Short Disk™ mainframe
- ❑ Short Disk™ wing stack
- ❑ Short Disk™ center brace bar
- ❑ Short Disk™ wing brace bars
- ❑ Short Disk™ depth stop tube
- ❑ Short Disk™ tongue
- ❑ Finishing attachments
- ❑ Miscellaneous crate
- ❑ Zero or more pallets or crates with optional gauge wheels

Figure 2 29995
Great Plains Truck

Shipment Inventory

Verify the implement serial number of your order confirmation documents with the markings on major sub-assemblies and crates.

🕮 The truck may contain shipments other than yours. Confirm items to be unloaded with driver.

Unloading

Location Requirements

1. Determine a location for machine assembly. There must be ample space for mobile lifters to deliver and position the wings, vertical space for fold testing, and hitch space to attach a towing vehicle for lift test as well as tow-away on completion.

   The unfolded widths are:

   SD2600: 30 feet (9.1 m)

   SD3000: 33 feet (10.1m)

   SD3300: 36 feet (11.0m)

   The vertical space for fold testing is 15 feet (4.6 m).

2. Plan the unload, based on the lifters available, and the order of large assemblies on the truck.

   It is usually easiest to unload from trailer back to front.

3. If lifters are not mobile, or if using facing forklifts, plan to have the driver pull the trailer out from under each lifted load. Lift for 12 inches (300 mm) clearance.

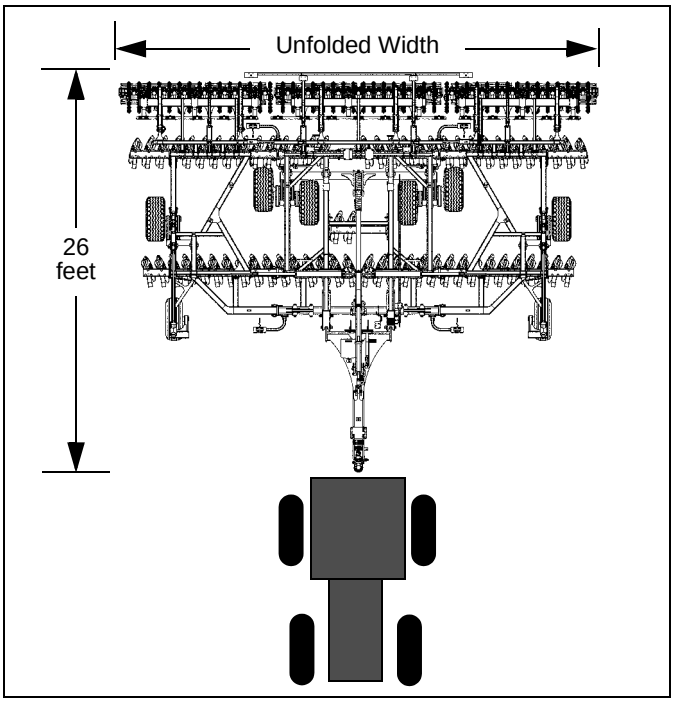

Figure 3 36571
Machine Extents

Unload Smaller Items First

Unload crates, options and attachments first, spotting them well clear of the assembly area.

Unload Wings

The wing stack may be removed as an assembly from the truck. For efficiency of spotting for stack breakdown, the left wing is on the bottom, the right wing on the top, and the outside of each wing may be identified by a small angled tube weldment ①. Use lifting loops provided.

WARNING

Overhead Crushing Hazard:
Use an adequate lifter. The wing stack may weigh as much as 7500 pounds (3400 kg). If using multiple lines, make sure that each is rated for the full load.

Place lines where they take an equal share of the load and cannot slip. Attach at frame tubes or weldments, and not at bolted-on components.

Keep all non-essential personnel clear of the truck, lift and movement path. A swinging load can cause crushing injuries. A falling load could cause serious injury or death.

Unload the wings from the truck, and spot clear of the path from truck to assembly point.

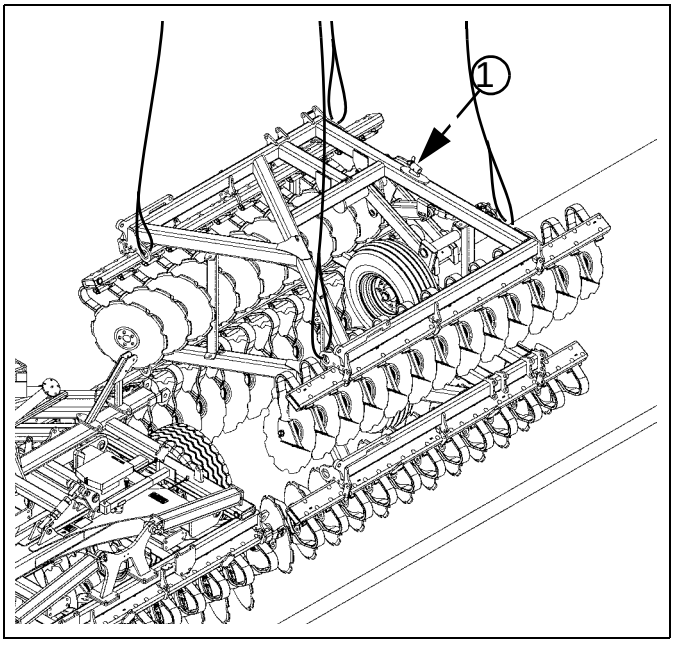

Figure 4
Unload Wing Stack
36579

Unload Center Section

Refer to Figure 5 (actual location of additional components on the frame bundle may vary over time)

The center section may be unloaded as a bundle, or, time permitting, any components tied of bolted to it may be removed first.

WARNING

Overhead Crushing Hazard:
Use an adequate lifter. The center section may weigh as much as 12,000 pounds (5500 kg). If using multiple lines, make sure that each is rated for the full load.

Place lines where they take an equal share of the load and cannot slip. Attach at frame tubes or weldments, and not at bolted-on components.

Keep all non-essential personnel clear of the truck, lift and movement path. A swinging load can cause crushing injuries. A falling load could cause serious injury or death.

Unload the center section from the truck. Spot at assembly point if possible. Lower to ground slowly, as the assembly rests on discs.

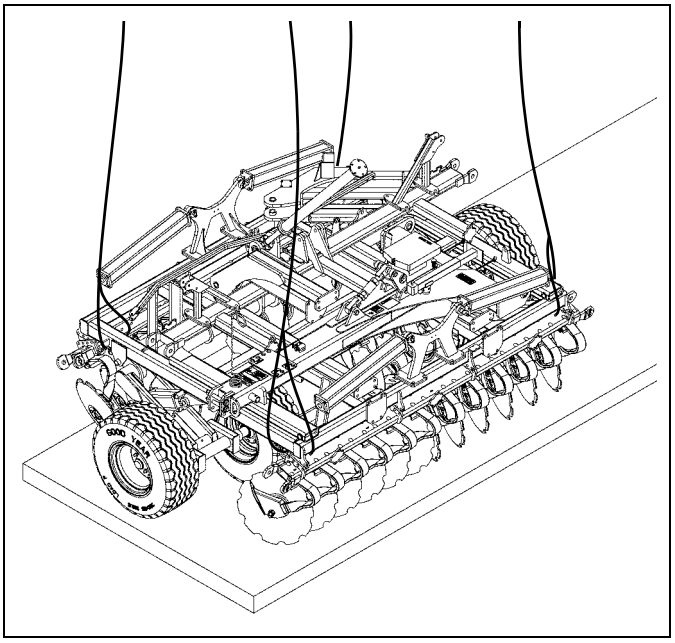

Figure 5 36580
Unload Center Section

Release Truck

1. Verify that no other crates or palettes still on the track are intended for the unload machine (check serial numbers).

🕮 Shipping stands do not need to be returned to Great Plains.

2. Carefully remove bands from crates, brace bars, options and attachments.
3. Other than hoses and components attached to hoses, remove all loose components and sub-assemblies from the center section. Place them clear of the work area.

🕮 Do not disconnect any hydraulic hoses on the center section. The are intended to be routed to the wings and tongue while connected. Leave caps in place until connections are made.

Assembly

Remove Shipping Plates

Disc gangs were pivoted inward to meet shipping clearance requirements. Remove the plates holding them at an angle, and install additional bolts.

Refer to Figure 6 (showing only the LH front plate)

1. Loosen all 6 nuts (47) at the front two corner shipping plates ①.
2. Use a jack or hoist to support the forward tube of the center section so that the shipping bolts ② are not in tension.
3. Remove the outside two shipping bolts at each side, the washers (if any) and nuts and the shipping plates. The plates are not re-used.

   Leave the inside bolt in place as a pivot.
4. Select six new or saved:
   (36) 802-841C HHCS 3/4-10X2 1/2 GR8
5. Use a jack or hoist to raise the gang bar up, pivoting on the bolt left in place. Insert 3 bolts (36) at each side to temporarily hold the gang bar up.
6. Select six sets new or saved:
   (55) 804-023C WASHER LOCK SPRING 3/4 PLT
   (47) 803-027C NUT HEX 3/4-10 PLT
   Add a washer and nut to each bolt (36).
7. Secure all four nuts to hand tight. The bolts are tightened to torque spec after attaching the wings to the center frame. Leaving the bolts hand tight will allow for ease of attachment between the wings and center frame.
8. Repeat step 1 through step 6 for the shipping plates ③ at the rear tube and gang bar.

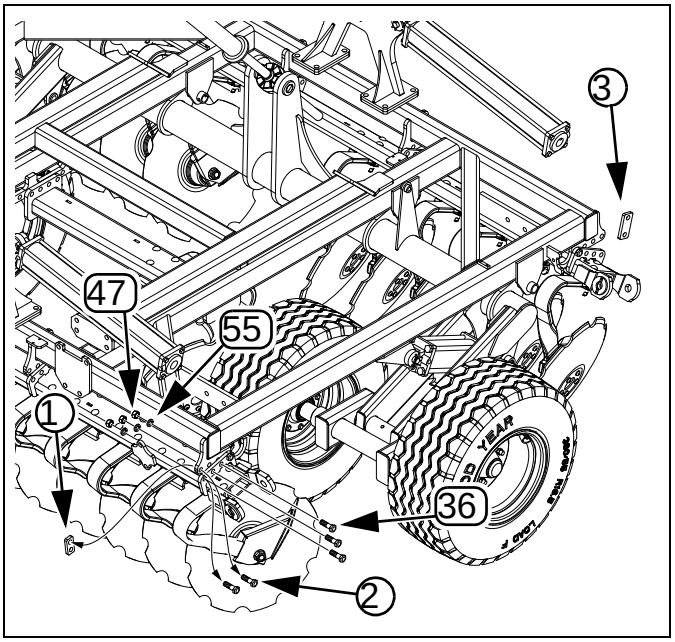

Figure 6 36583
Center Shipping Plates

Install Center Brace Bar

Refer to Figure 7 (an exploded Parts manual illustration)

1. Select one:
   (13) 559-078H BRACE BAR-CENTER
   and six sets:
   (32) 802-947C HHCS 3/4-10X2 GR8
   (55) 804-023C WASHER LOCK SPRING 3/4 PLT
   (47) 803-027C NUT HEX 3/4-10 PLT
2. With the fold lock weldments (15) up, secure the center brace (13) to the center gang bar (19) with a pair of bolts (32), lock washers (55) and nuts (47) at each of three plates.

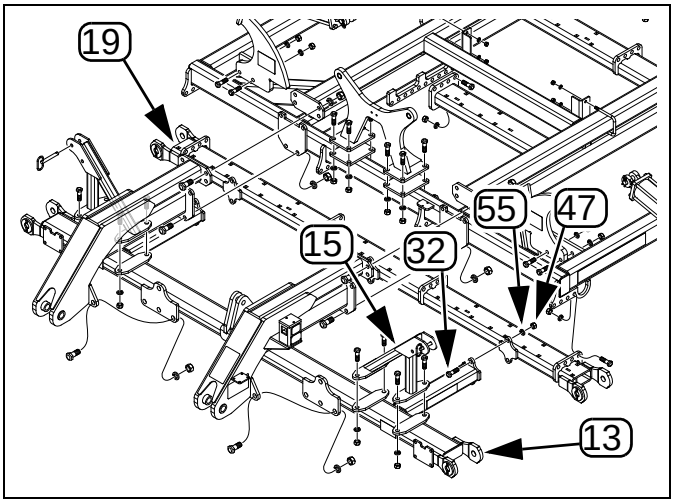

Figure 7 36440
Center Brace Bar

Install Front Trusses

Left Front Truss

Refer to Figure 8 (an exploded Parts manual illustration)

1. Select one:
   (8) 559-040H TRUSS-SD FRONT LH
   If not otherwise marked, identify the LH truss by the box-like depth stop mounting bracket ①.
2. Select and six sets:
   (32) 802-947C HHCS 3/4-10X2 GR8
   (55) 804-023C WASHER LOCK SPRING 3/4 PLT
   (47) 803-027C NUT HEX 3/4-10 PLT
   and three sets:
   (33) 802-096C HHCS 1-8X2 1/2 GR5
   (56) 804-027C WASHER LOCK SPRING 1 PLT
   (48) 803-031C NUT HEX 1-8 PLT
3. Secure the upper rear end of the LH truss (8) to the left hand mainframe plates ② with the $^{3}/_{4}$-inch bolts (32), lock washers (55) and nuts (47) at each of two plates.

   Attach the lower front of the LH truss to the LH front brace bar plate ③ with the 1-inch bolts (33), lock washers (56) and nuts (48). Hand tighten bolts so truss is secure but can still be moved to allow easier installation of the hitch.

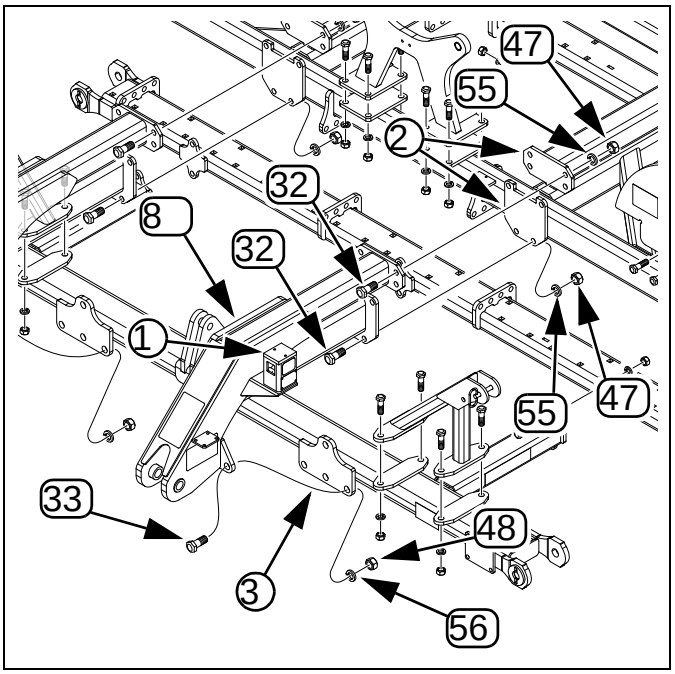

Figure 8 36440
Front LH Truss

Right Front Truss

Refer to Figure 9 (an exploded Parts manual illustration)

1. Select one:
   (7) 559-039H TRUSS-SD FRONT RH
2. Select and six sets:
   (32) 802-947C HHCS 3/4-10X2 GR8
   (55) 804-023C WASHER LOCK SPRING 3/4 PLT
   (47) 803-027C NUT HEX 3/4-10 PLT
   and three sets:
   (33) 802-096C HHCS 1-8X2 1/2 GR5
   (56) 804-027C WASHER LOCK SPRING 1 PLT
   (48) 803-031C NUT HEX 1-8 PLT
3. Loosely secure the upper rear end of the RH truss (7) to the right hand mainframe plates ④ with the $^{3}/_{4}$-inch bolts (32), lock washers (55) and nuts (47) at each of two plates.

   Loosely secure the lower front of the RH truss to the RH front brace bar plate ⑤ with the 1-inch bolts (33), lock washers (56) and nuts (48).

   Truss nuts are fully secured at step 5 on page 18.

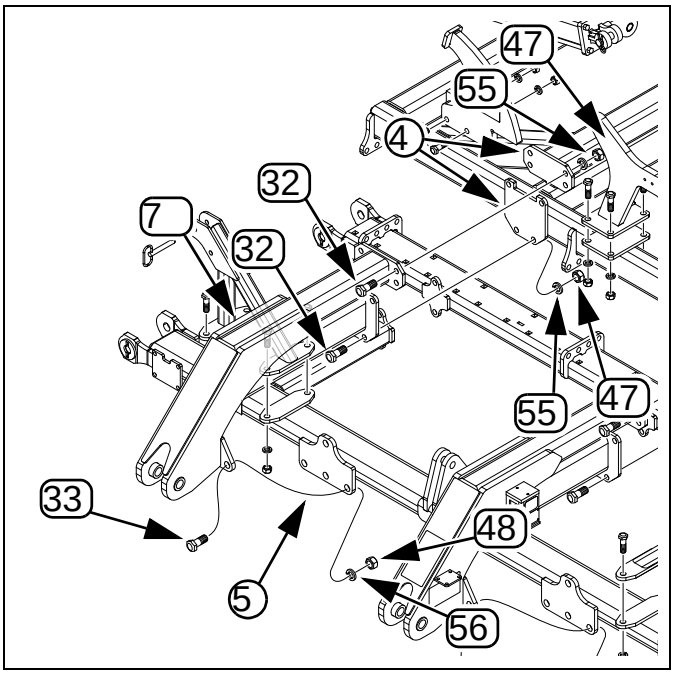

Figure 9 36440
Front RH Truss

Install Down-Pressure Valve

Refer to Figure 10 (also showing valves installed at later steps, for hose routing guidance)

1. Locate the assembly containing the:
   (70) 810-849C FIXED BYPASS DOWN PRESS VALVE
   It is pre-connected to hydraulic hoses, and secured to the center frame with ties for shipment.
2. Release ties as needed to route the assembly and its hoses to the front of the brace bar. Close the wing lock valve (69). At the front of the valve, temporarily disconnect the hose to the down-pressure valve. Route the valve and rear hose under the truss.
3. Select one:
   (67) 806-202C U-BOLT 1/2-13X3 1/32X7 1/4
   and two sets:
   (53) 804-015C WASHER LOCK SPRING 1/2 PLT
   (48) 803-020C NUT HEX 1/2-13 PLT

   Loosely mount the valve assembly on the front tube of the brace bar, to the right of the left hand truss. Position it close to but not touching the truss. Secure the nuts.

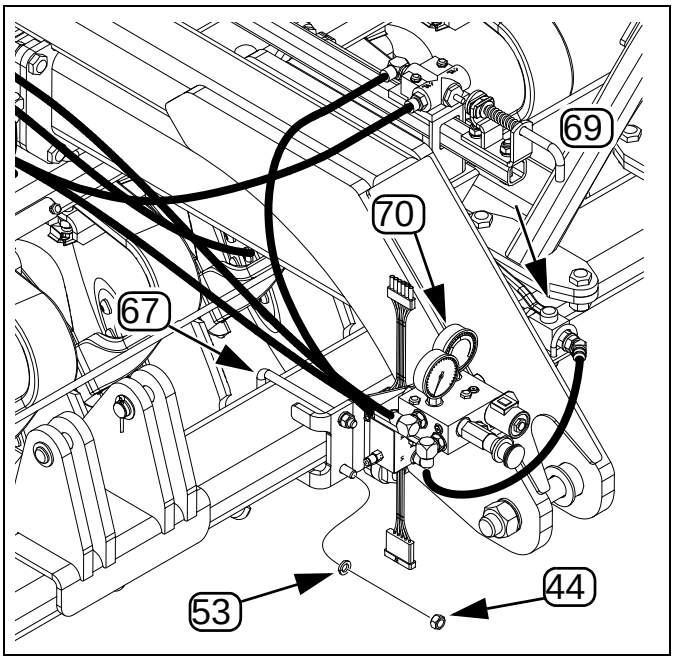

Figure 10 36584
Down-Pressure Valve

Install Wing Fold Lock Valve

Refer to Figure 11 (also showing a valve installed at later steps, for hose routing guidance)

1. Select two:
   (65) 806-136C U-BOLT 5/16-18 X 1 3/8 X2 3/16
   and four sets:
   (52) 804-009C WASHER LOCK SPRING 5/16 PLT
   (43) 803-008C NUT HEX 5/16-18 PLT
2. Position the valve (69) on the mount plate (a weldment on the left side of the left hand truss). Verify that the valve handle is either:
   • to the rear with the valve open (shown), or
   • to the left with the valve closed.

   Secure the valve to the plate with the U-bolts (65), lock washers (52) and nuts (43).

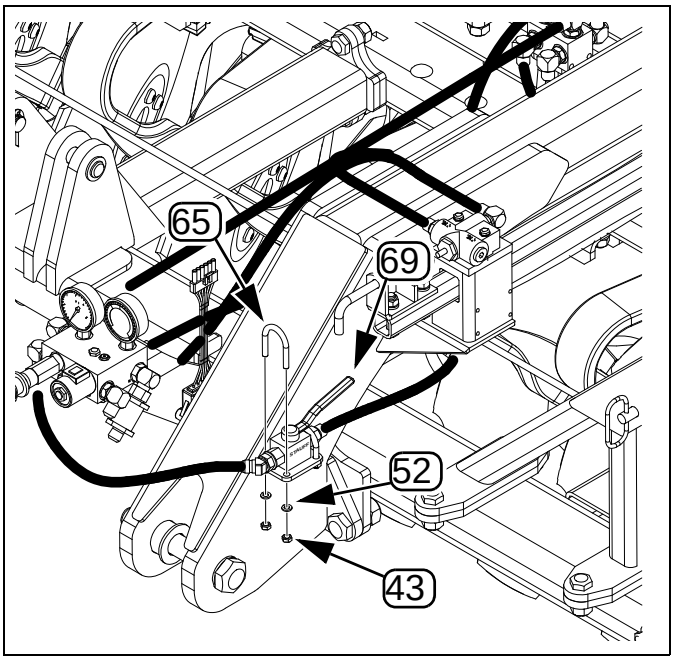

Figure 11 36585
Wing Fold Lock Valve

Install Depth Control Valve

Refer to Figure 12

1. Select two sets:
   (34) 802-115C HHCS 5/16-18X2 GR5
   (52) 804-009C WASHER LOCK SPRING 5/16 PLT
2. Position the depth control valve (68) on the mount plate ① (a weldment tower on the left side of the left hand truss).

   Secure the valve to the plate with the bolts (34) and lock washers (52).

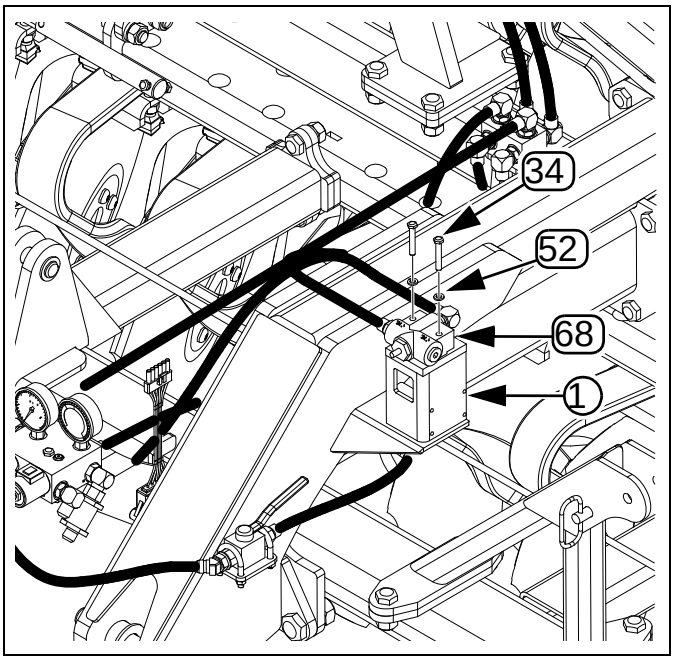

Figure 12
Depth Control Valve
36586

Install Depth Stop Tube

Refer to Figure 13 (a Parts manual illustration showing the depth stop assembly disassembled further than necessary)

1. Select one:
   (14) 559-080H DEPTH STOP TUBE-SD
   Remove and save the adjustment/stop assembly:
   (3) 550-202S DEPTH STOP ASSEMBLY
2. With the bent section of the tube up, insert the straight end of the tube through the depth stop mount plate ①.
3. Select one set:
   (31) 802-058C HHCS 5/8-11X2 1/2 GR5
   (46) 803-024C NUT LOCK 5/8-11 PLT
   Secure the rear (angled) end of the tube (14) to the rockshaft arm ②.
4. Re-install the adjustment/stop assembly (3) on the front end of the tube. See the Parts manual for a breakdown.

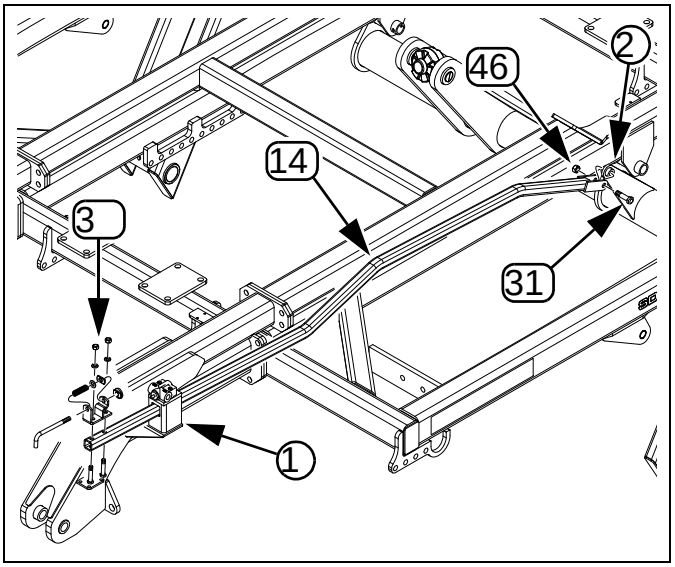

Figure 13
Depth Stop Tube
36594

Install Level Bar Linkage

Install Link H-Weldment

Refer to Figure 14 (an exploded Parts manual illustration showing some components installed later)

1. Select one:
   (11) 559-043H H-BRACKET-SD
   and two sets:
   (60) 805-004C PIN CLVS 1.0X2.75 USBL
   (59) 804-192C WASHER MACH 1.5X1.00X.075
   (61) 805-058C PIN COTTER 3/16 X 2
2. With the flat edges of the H-weldment (11) forward, pin the lower end of the weldment between the trunnions of the brace bar. Secure the pins (60) with flat washers (59) and cotters (61).

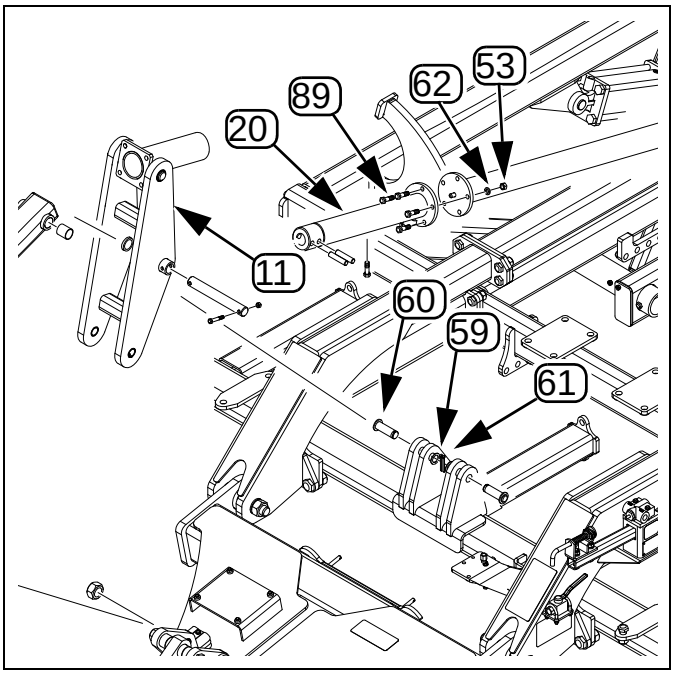

Figure 14 36427
Level Link Weldment

Install Level Bar

1. Select one:
   (12) 559-046H LEVEL BAR - SD
   and five sets:
   (81) 802-082C HHCS 1/2-13X1 3/4 GR5
   (62) 804-015C WASHER LOCK SPRING 1/2 PLT
   (45) 803-020C NUT HEX 1/2-13 PLT
2. Attach level bar (20) orienting gauge leg as close to bottom as possible. Tighten the nuts.
3. If shipped in the level bar, remove and save one:
   (38) 802-337C HHCS 1/2-13X2 GR5 NYL

Connect Level Link Bar

The next step depends on the type of level linked ordered for the machine.

For hydraulic disk level (Option 60, 559-089A), continue at "**Hydraulic Level Link Connect (Option)**" below.

For rigid disk level (Option 61, 559-124A), continue at "**Fixed Level Link Connect (Option)**" on page 17.

Hydraulic Level Link Connect (Option)

Refer to Figure 15

1. Install 1/16 inch orifice plates (196-430D) in both ports of the leveling cylinder. Install elbow fitting (811-063C) in the rod side port and the 45-degree elbow (811-690C) in the base side port.
2. Select one:
   ⑯ 559-089A HYDRAULIC DISK LEVEL
   and two:
   ㉑ 559-207D PIN-5/8X2 7/8
   and four sets:
   ㉟ 802-128C HHCS 1/2-13X2 GR5
   ㊺ 803-020C NUT HEX 1/2-13 PLT
   ㊹ 804-015C WASHER LOCK SPRING 1/2 PLT
3. Pivot the H-weldment ⑪ up, bringing the pivoting tube into alignment with the level bar ⑫. Slide the level bar through the tube until the pin holes are visible.
4. Insert the gauge actuator rod ① through the upper gap of the H-weldment. Insert the round bar end of the hydraulic cylinder weldment ⑯ into the end of the level bar ⑫ and secure with pins ㉑.
5. Secure the hydraulic link plate to the pivot tube plate with bolts ㉟, lock washers ㊹ and nuts ㊺.
6. As necessary, rotate the level bar assembly until the gauge lug ② is at bottom dead center.
7. Secure the gauge actuator rod ① to the gauge lug ②. Use:
   ㊿ 802-079C HHCS 3/8-16x1 1/4 GR5
   ㉑ 803-013C NUT LOCK 3/8-16 PLT
8. Select the:
   ㊳ 802-337C HHCS 1/2-13X2 GR5 NYL
   Insert it through the slot in the pivoting tube and into the threaded hole in the level bar. Secure to torque spec.

Continue at “**Install Tongue**” on page 18.

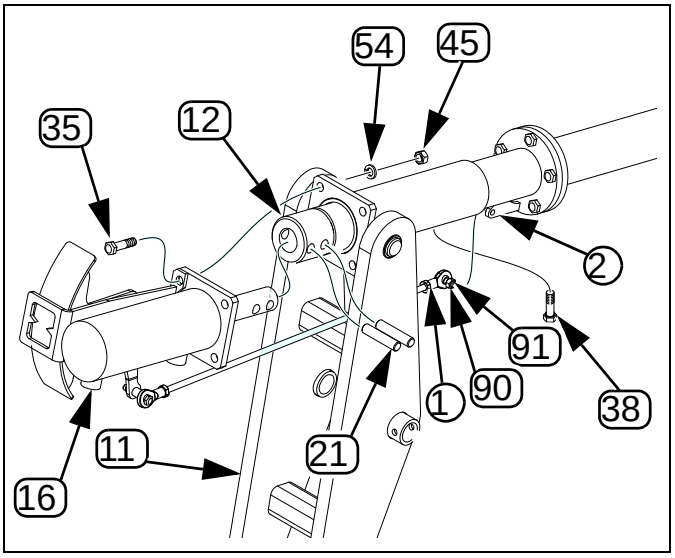

Figure 15 36588
Hydraulic Level Link Bar

Fixed Level Link Connect (Option)

Refer to Figure 16

1. If shipped in the level bar ⑫, remove and save one:
   ⑱ 802-337C HHCS 1/2-13X2 GR5 NYL
2. Select one:
   ⑰ 559-092H LINK-RIGID LEVEL
   two:
   ㉑ 559-207D PIN-5/8X2 7/8
   and four sets:
   ㉟ 802-128C HHCS 1/2-13X2 GR5
   ㊹ 804-015C WASHER LOCK SPRING 1/2 PLT
   ㊺ 803-020C NUT HEX 1/2-13 PLT
   If the 559-092H weldment ⑰ was shipped attached to the H-weldment ⑪, remove it.
3. Pivot the H-weldment ⑪ up, bringing the pivoting tube into alignment with the level bar ⑫. Slide the level bar through the tube until the pin holes are visible.
4. Insert the round bar end of the rigid link weldment ⑰ and secure with pins ㉑.
5. Secure the rigid link plate to the pivot tube plate with bolts ㉟, lock washers ㊹ and nuts ㊺.
6. As necessary, rotate the level bar assembly until the gauge[a] lug ① is at bottom dead center.
7. Select the:
   ⑱ 802-337C HHCS 1/2-13X2 GR5 NYL
   Insert it through the slot in the pivoting tube and into the threaded hole in the level bar. Secure to torque spec.

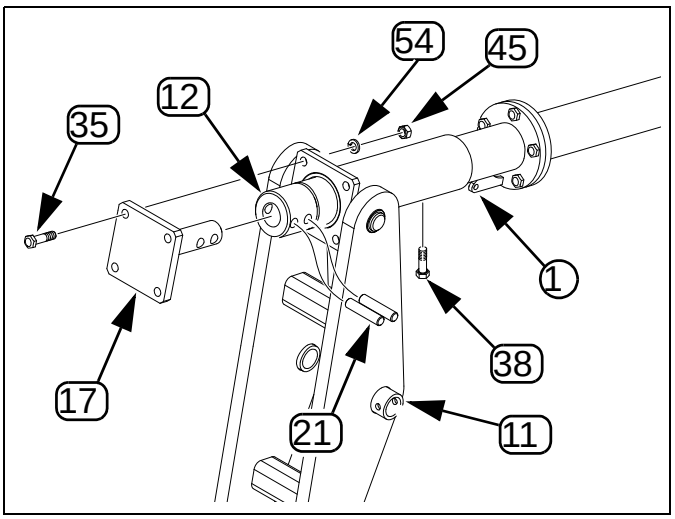

Figure 16
Rigid Level Link Bar

36587

a. This attachment point is not otherwise used in a rigid level link installation.

Install Tongue

Refer to Figure 17 (an exploded Parts manual illustration showing some components installed later)

1. Select one:
   (10) 559-042L HITCH ASSY SDH
   and two sets:
   (41) 802-903C HHCS 1 1/4-7X8 GR8 SPTHD
   and, for the moment, four:
   (57) 804-039C WASHER FLAT 1 1/4 SAE PLT
2. Bring the hitch ball joints into alignment with the truss lugs. Using one washer (57) on each side of each hitch ball joint, insert a bolt (41) to temporarily hold the hitch in position.
3. Select two:
   (50) 803-314C NUT HEX TOP LOCK 1 1/4-7 PLT
   Secure the bolts (41) with nuts (50). Tighten only until snug. Do not tighten to torque spec.
4. Remove the tongue jack (not shown) from the storage stob on top of the tongue. Attach it to the side stob at the front of the tongue. Use the jack to assist with the link tube installation, and leave it attached to the side stob until the completed implement is towed away.
5. Tighten all truss bolts.

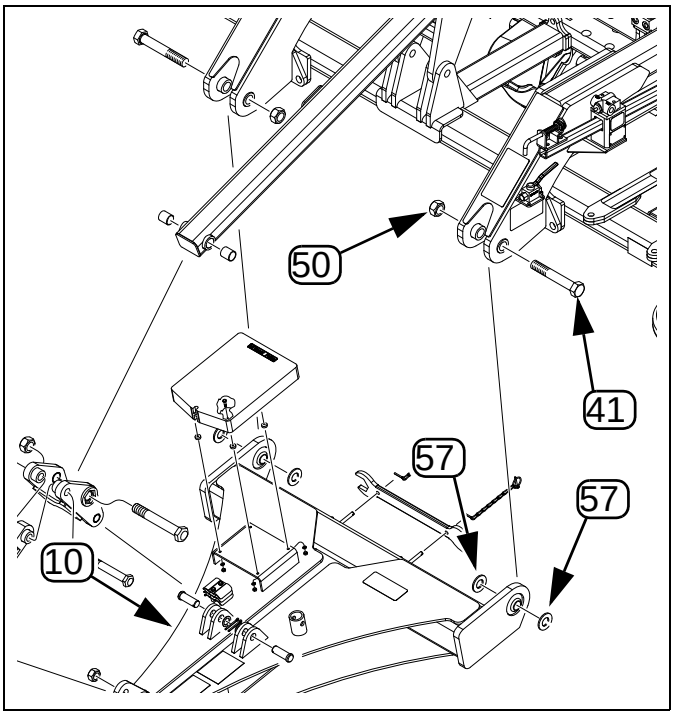

Figure 17
Install Tongue
36420

Tongue Leveling Tube

Refer to Figure 18

1. Select one each:
   (9) 559-041S LINK-SD LEVELING 51.66
   (63) 805-420C PIN CLVS HDLS 1.25X8.25 USBL
   (40) 802-483C HDHCS 3/8-16X2 1/4 GR8 PLT
   (49) 803-123C NUT HEX TOP LOCK 3/8-16 PLT
2. With the small side plate (1) to the right, and the two tapped holes toward the ground, align the rear end of the leveling tube (9) with the center bushings of the H-weldment (11). Insert pin (63) to hold in position.
3. Rotate the pin to align and end hole with the holes in the outside left end of the H-weldment bushing tube. Secure pin to tube with bolt (40) and lock nut (49). Tighten nut only until snug (not to torque spec).
4. Select one each:
   (24) 576-145D HHCS 1 1/4-7X8 1/2 GR8 SPTH
   (50) 803-314C NUT HEX TOP LOCK 1 1/4-7 PLT
5. Use the tongue jack to align the center bushings of the turnbuckle link with the level tube. Insert the bolt (24) to hold position. Secure with lock nut (50). Tighten nut only until snug (not to torque spec).

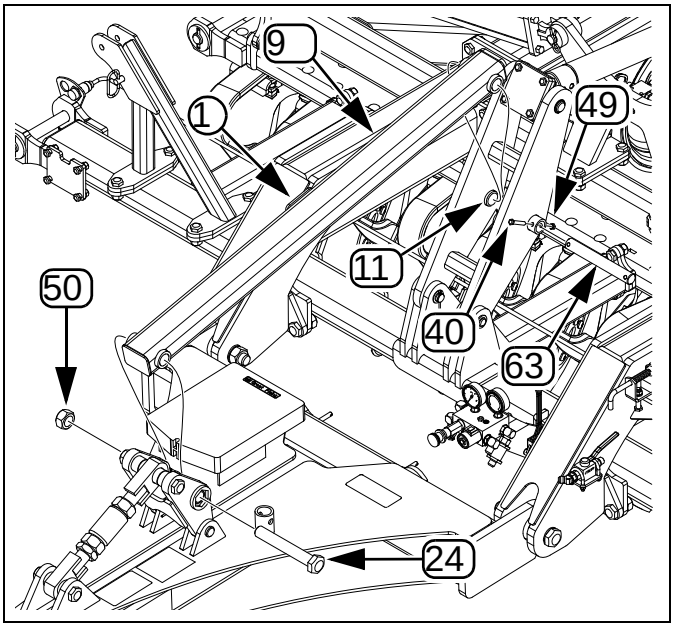

Figure 18
Tongue Level Tube
36589

Install Leveling Lock Valve (Option)

If the implement was not ordered with the hydraulic disk level (Option 60, 559-089A), continue at "**Tongue Hose Routing**" below.

Refer to Figure 19

1. Locate the:
   (4) 559-005V HYDRA FITTING KIT SDH LEVEL
   This valve block is pre-connected to hoses for the hydraulic level system already partially installed at step 2 on page 16.
2. Select three sets:
   (37) 802-221C HHCS 1/4-20X1 1/2 GR2
   (51) 804-006C WASHER LOCK SPRING 1/4 PLT
3. Align the valve block (4) against the leveling tube plate (9), with the 45· angled fittings up and facing to the rear. Secure with bolts (37) and lock washers (51).

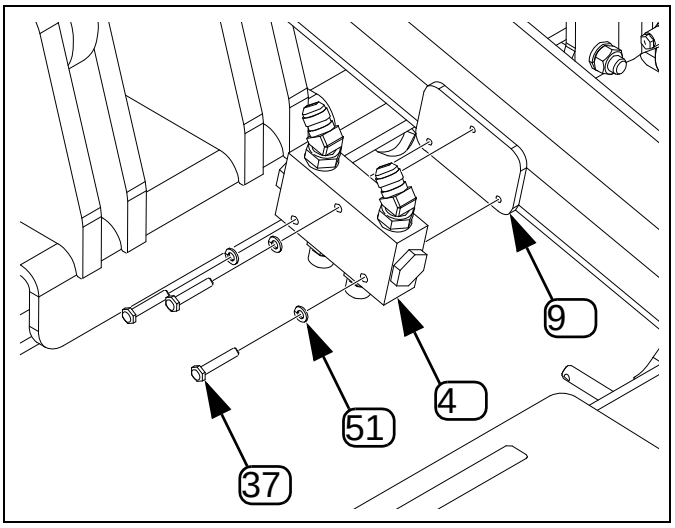

Figure 19 36590
Leveling Relief Valve

Tongue Hose Routing

Hose Order at Clamps

Refer to Figure 20 (a rear view of a clamp stack)

Prior to routing hoses on the tongue, review the illustration at right and the following table for hose stacking order under the tongue clamps.

Level	Hose Function
4	Roller
3	Hydraulic Level or Roller
2	Fold
1	Lift

- 🕮 Base end (Extend) hoses route under the left hand side of the clamps. Rod end (Retract) hoses route under the right hand side of the clamps.
- 🕮 Three clamps are standard on the tongue. If a hydraulic finishing option is included, that kit contains longer bolts and the 4th clamps for the tongue.

Do not tighten clamps until all hoses are installed.

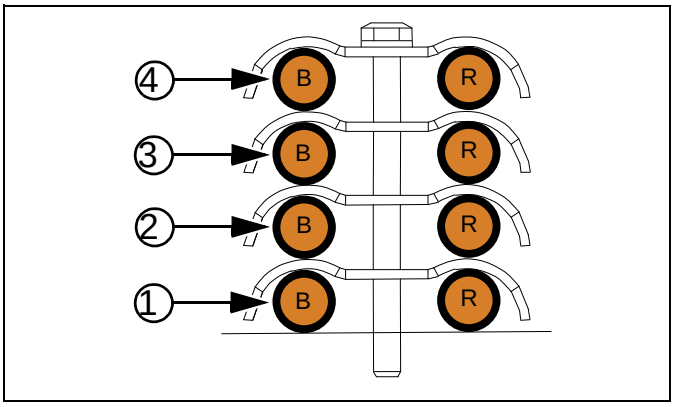

Figure 20: Rear View: 36595
Hose Order at Clamps

Route Lift Hoses on Hitch

Refer to Figure 21

1. Uncoil the lift hoses from the mainframe. They are identical hoses:
   (78) 841-198C HH1/2R2 180 3/4FJIC 3/4MORB
   except for the (Black) hose handles, which have distinct symbols on the hose handles:

   The retracted rod symbol is on the rod end (Retract) hose. This hose routes to counterbalance valve (66) port V2.

   The extended rod symbol is on the base end (Extend) hose. This hose routes to counterbalance valve (66) port V1.
2. Route these hoses under the level tube, under the manual pak, through the rear hitch clamps, through the turnbuckle trunnion, through the front clamps and through the hose loop. Insert the hose handles in the caddy holes. A decal identifies the hose function and handle color.

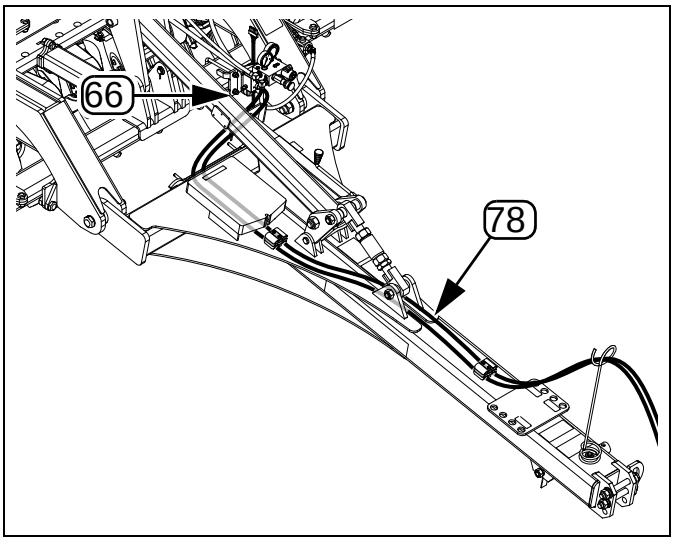

Figure 21 36596
Lift Hose Routing

Route Fold Hoses on Hitch

Refer to Figure 22

1. Uncoil the fold hoses from the mainframe. They are identical hoses:
   (79) 841-838C HH1/2R2 185 3/4FJIC 3/4MORB
   except for the (Green) hose handles, which have distinct symbols on the hose handles:

   The retracted rod symbol is on the rod end (Retract) hose. This hose routes to down-pressure valve (70) port “T”.

   The extended rod symbol is on the base end (Extend) hose. This hose routes to down pressure valve (70) port “IN”.
2. Route these hoses under the level tube, under the manual pak, through the rear hitch clamps, through the turnbuckle trunnion, through the front clamps and through the hose loop. Insert the hose handles in the caddy holes. A decal identifies the hose function and handle color.

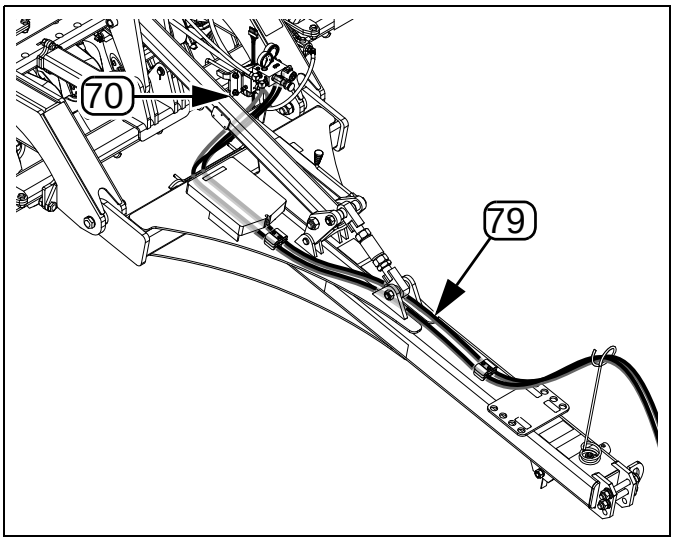

Figure 22 365976
Fold Hose Routing

Route Level Hoses on Hitch (Option)

If the implement was not ordered with the hydraulic disk level (Option 60, 559-089A), continue at "**Charge and Bleed**" on page 22.

Refer to Figure 23

1. Locate the level link hoses at the lock valve (4). They are identical hoses:
   (71) 811-962C HH3/8R2 175 3/4MORB 3/4FJIC
   except for the (Red) hose handles, which have distinct symbols on the each handle:

   The retracted rod symbol is on the rod end (Retract) hose. This hose routes to the rear lock valve port.

   The extended rod symbol is on the base end (Extend) hose. This hose routes to the forward lock valve port.
2. Route these hoses under the manual pak, through the rear hitch clamps, through the turnbuckle trunnion, through the front clamps and through the hose loop. Insert the hose handles in the caddy holes. A decal identifies the hose function and handle color.

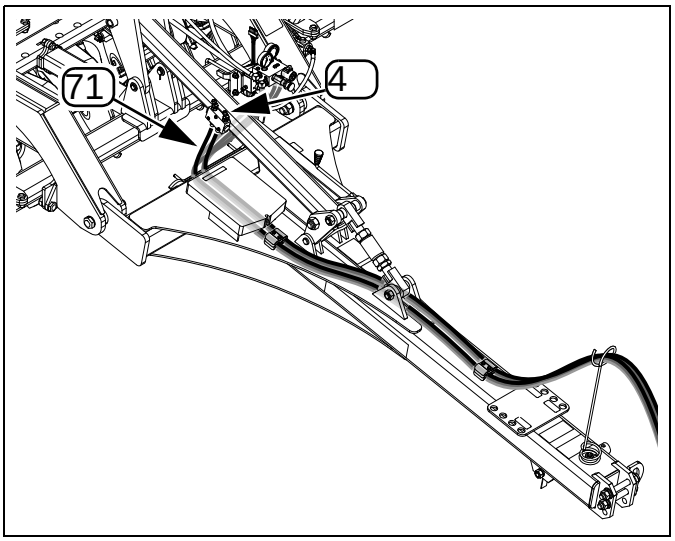

Figure 23
Level Hose Routing
36598

Charge and Bleed

Charge and Bleed Fold System

1. Before charging the fold system, verify that each fold cylinder has a $^{1}/_{16}$ inch (1.6 mm) orifice plate installed at each rod end.
2. Support the fold cylinders so that the rods cannot strike or drag on any other machine parts. Initially have the rods angled down to the clevis ends.
3. Connect the fold system to a hydraulic source. Fully Retract the cylinders. Set the source to Neutral.
4. Loosen (“crack”) the JIC fittings at all fold cylinder base ends.
5. Have one person slowly Extend the fold circuit until oil appears at a cracked fitting. Set the circuit to Neutral. Secure that fitting. Repeat this step for the remaining fitting(s).
6. Elevate the fold cylinders until the rod end hydraulic ports are higher than the base end ports.
7. Fully Extend all rods. Set the circuit the Neutral.
8. Loosen (“crack”) the JIC fittings at all fold cylinder rod ends.
9. Have one person slowly Retract the fold circuit until oil appears at a cracked fitting. Set the circuit to Neutral. Secure that fitting. Repeat this step for the remaining fitting(s).
10. Fully cycle the fold cylinders several times.

Charge Lift System

The wing lift cylinders are plumbed, but still tied to the center section at this point in pre-delivery. The lift cylinders are re-phasing and may be charged without actual bleeding.

1. Orient the wing lift cylinders so that the rods can extend and retract without striking or dragging on any other machine components.
2. Clear all persons from the machine vicinity. The center section rises during this operation.
3. Connect the lift circuit to a hydraulic source. Fully Extend the lift cylinders. Hold at fully extended for two seconds, then full Retract. Repeat this step several times.
4. Fully Extend the lift cylinders. Set the circuit to Neutral to hold at lift. Install the lock channels on the cylinder rods (see Operator manual for details).
5. Slowly Retract the lift circuit until the center section rests on the lock channels. Set the circuit to Float.

Cycle Level System (Option)

If the implement was not ordered with the hydraulic disk level (Option 60, 559-089A), continue at “**Center Section Complete**” on page 22.

WARNING

High Pressure Fluid Hazard:

The operations on this page require working near an open hydraulic system. Wear eye protection and stout gloves. Use cardboard to check for oil spray. Incorrect procedures can result in high pressure spray, which can cause serious eye injury and oil penetration of skin. If an accident occur, seek immediate attention from a health care provide who is familiar with this type on injury.

1. Before cycling the level system, verify that both cylinder ports have a $^{1}/_{16}$ inch (1.6 mm) orifice plate installed.
2. Connect the level system to a hydraulic source. Fully Extend and Retract the circuit several times. Set the circuit to Neutral after the final Retract.

Center Section Complete

This completes mainframe assembly operations prior to wing attachment.

Installation of weights (Option) are left until after wings are complete, but prior to any finishing option.

Installation of a finishing option is deferred until wings and weights are complete.

Wing Assembly

Unstack Wings

Start with the right wing.

Stack Breakdown

Refer to Figure 24

1. Position lifter(s) to support the weight of the upper (right) wing assembly. Secure lines or forks as for removing the stack from the truck (see page 9).
2. Lift until the lower wing disc springs just begin to uncompress. At this point the lifter is supporting slightly more than the weight of the upper wing.
3. Carefully loosen the fasteners at the foot of each upper shipping stand ①. *Do not* loosen the top fasteners at this time. *Do not* loosen or remove the disc gang shipping plates at this time.

   If the bolts do not go slack prior to the nuts being removed, lower the lifter until they do. If the nuts are in tension at release, the wing may rise suddenly, with some risk of minor injury or machine damage.
4. With all stand feet free, lift the upper wing clear, and spot it near the right side of the center section, with the gauge wheel turnbuckle tube ② to the outside.

Remove Shipping Plates

Refer to Figure 25

1. Loosen all 6 nuts ㊼ at the front shipping plates ①.
2. Use a jack or hoist to support either the gang bar (right wing on stands) or the wing tube (left wing on ground) so that shipping bolts ③ are not in tension.
3. Remove the outside two shipping bolts at each side, the washers (if any) and nuts and the shipping plates. The plates are not re-used.Leave the inside bolt in place as a pivot.
4. Select six new or saved:
   ㊱ `802-841C HHCS 3/4-10X2 1/2 GR8`
5. Raise the gang bar (right wing, on stands) or lower the frame (left wing, on hoist), pivoting on the bolt left in place. Insert 3 bolts ㊱ at each side to temporarily hold the gang bar up.
6. Select six sets new or saved:
   ㊺ `804-023C WASHER LOCK SPRING 3/4 PLT`
   ㊼ `803-027C NUT HEX 3/4-10 PLT`
   Add a washer and nut to each bolt ㊱. Secure all four nuts only to hand tight.
7. Repeat step 1 through step 6 for the shipping plates ③ at the rear tube and gang bar.

WARNING

Overhead Crushing Hazard:
Do not "wing" it. Follow instructions carefully. The upper wing assembly must be completely supported at all times. Releasing stands without adequate support can result in the upper wing falling, causing serious injury or death.

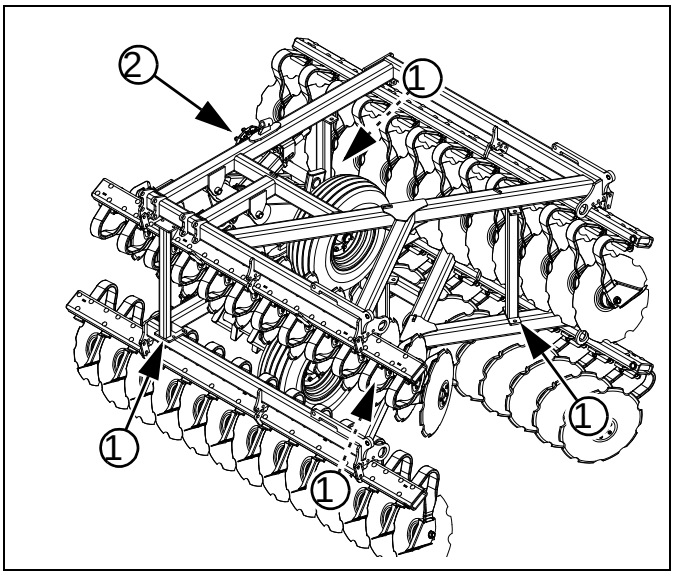

Figure 24
Wing Stack
36591

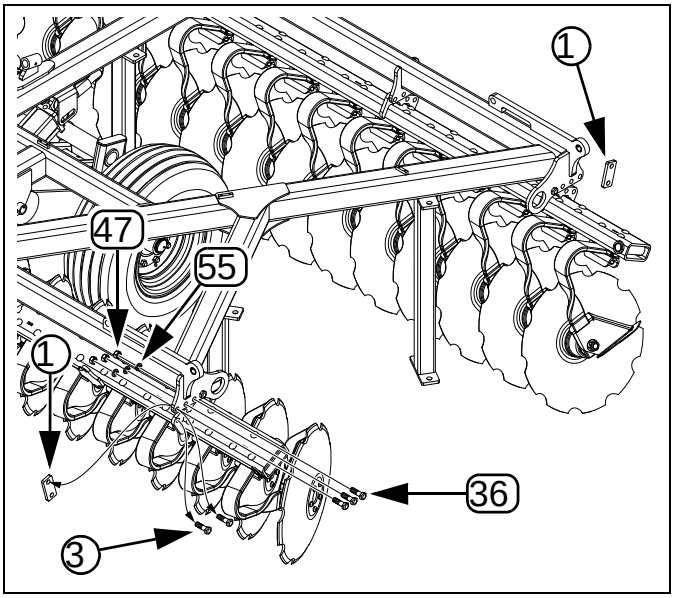

Figure 25
Wing Gang Shipping Plates
36592

Remove Shipping Stands

This applies to the top (right) wing only. For the left wing, continue at "**Connect A Wing**" below.

Refer to Figure 26

1. Use the lifter to raise the wing until the stand bases are in loose contact with the ground, or slightly above it.
2. Remove the fasteners securing the stands ④ to the wing. These are not reused and do not need to be returned to Great Plains.
3. Slowly lower the wing to the ground.

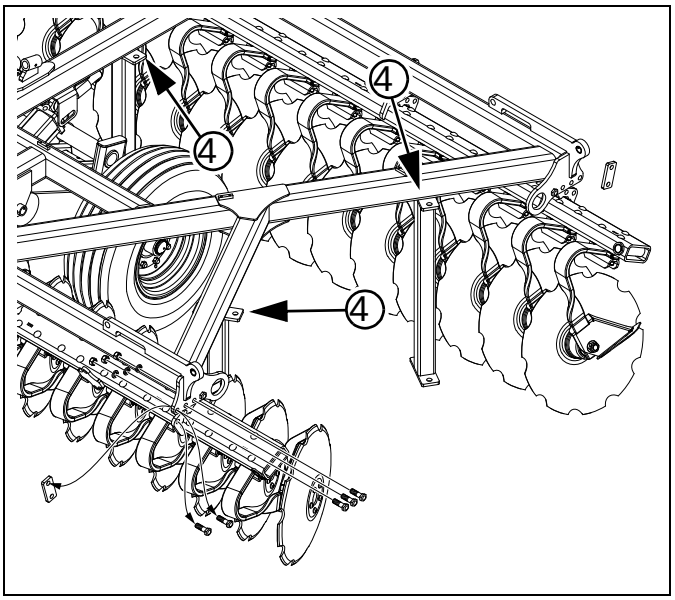

Figure 26 36592
RH Wing Shipping Stands

Connect A Wing

Start with the left wing.

Refer to Figure 27 (an exploded Parts manual illustration, depicting a left wing)

1. Select two:
   20 559-132D PIN 1.25X8.63
   These pins should have spiral pins installed in one end. Leave the spryly pins in. Remove and save any washer, plates or snap rings on the other ends.
2. Select a wing 5. With the gauge wheel turnbuckle tube ⑤ up, use a hoist or other lifter to bring the gang bars into alignment with the clevis ends of the mainframe tubes.

   Secure the alignment by inserting pins 20 from front to back.
3. Select two sets:
   27 800-177C SNAP RING EXT 1 1/4 HEAVY
   58 804-165C WASHER MACH 1 7/8X1 1/4X 14GA
4. Place a machine washer 58 over the rear ends of the pins. Secure each with a snap ring 27.
5. Repeat step 1 through step 4 for the right wing.

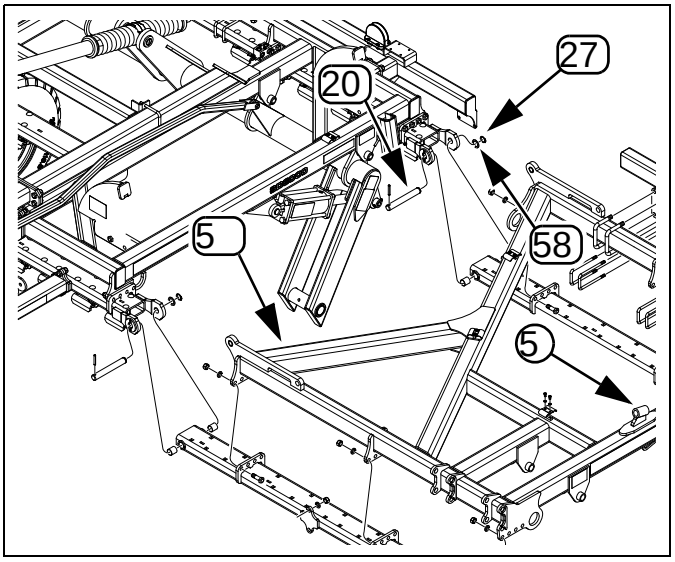

Figure 27 36479
Connect A Wing

Install Wing Brace Bars

Start with the left wing.

Refer to Figure 28 (an exploded Parts manual illustration)

1. Select one of:
   (6) 559-034S WING BRACE-SD
   RH SD3000, SD3300
   (6) 559-087S WING BRACE-SD
   LH SD3000, SD3300
   (6) 559-158S WING BRACE-SD
   RH SD2600
   (6) 559-162S WING BRACE-SD
   LH SD2600
   and four sets:
   (32) 802-947C HHCS 3/4-10X2 GR8
   (55) 804-023C WASHER LOCK SPRING 3/4 PLT
   (47) 803-027C NUT HEX 3/4-10 PLT
2. Select one:
   (20) 559-132D PIN 1.25X8.63
   This pins should have a spiral pin installed in one end. Leave the spryly pin in. Remove and save any washer, plate or snap ring on the other end.
3. Bring the bushing of the brace bar into alignment with the clevis ends of the mainframe tubes.

   Secure the alignment by inserting the pin (20) from front to back.
4. Select one each:
   (27) 800-177C SNAP RING EXT 1 1/4 HEAVY
   (23) 559-287D PROX SENSOR BRACKET
5. With the pivot bushing end to the inside, loosely secure the wing brace (6) to the wing gang bar (5) with a pair of bolts (32), lock washers (55) and nuts (47) at each of three plates.
6. Place the proximity sensor bracket (23) over the rear end of the pin (20). The break on the lower end of the bracket faces forward. The flat face of the large bracket hole aligns it with the bushing sleeve. Secure with snap ring (27).
7. Repeat step 1 through step 6 for the right wing.
8. Once the wing braces are installed, go through and tighten all gang mounting bolts that attach gang bars to the center- and wing frames.

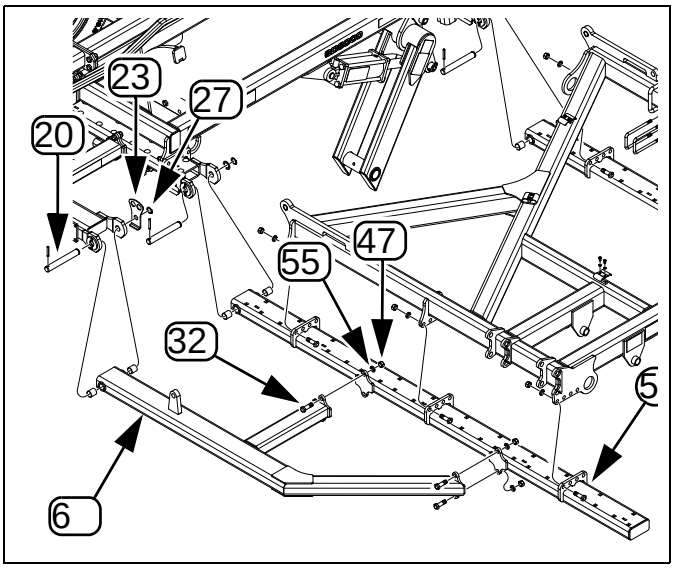

Figure 28
Install Wing Brace Bar
36479

Connect Fold Cylinders

Refer to Figure 29

1. At each fold cylinder (2 on SD2600, 4 on SD3000 and SD3300), remove and save the:
   (59) 804-192C WASHER MACH 1.5X1.00X.075
   (61) 805-058C PIN COTTER 3/16 X 2
   (64) 805-396C PIN CLVS 1.0X3.13 USBL
2. Make sure all cylinders not yet connected are blocked up so that extending and retracting rods cannot strike or drag on anything. Use a hydraulic source (e.g. tractor) to operate the fold circuit. Be sure to rotate cylinder rod clevis to have clevis bolt towards the ground. Position each rod clevis to align with the wing lug ①. Secure clevis with pin (64), washer (59) and cotter (61).
   Tighten loosened hydraulic fittings.

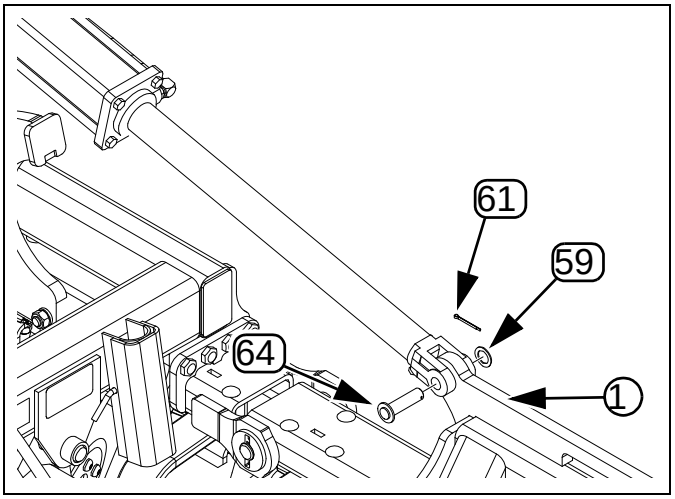

Figure 29 36599
Connect Fold Cylinder

Connect Wing Lift Cylinders

Start with the left wing.

Route Wing Hoses

Refer to Figure 30

1. Move the cylinder from the center section, over the diagonal wing tube, and under the outside wing tube. Cylinder ports are on top at installation.
2. Loosely arrange the hoses under the clamps. The cylinder base end hose goes under the rear side of each clamp. Eliminate any twists in the hose pair.

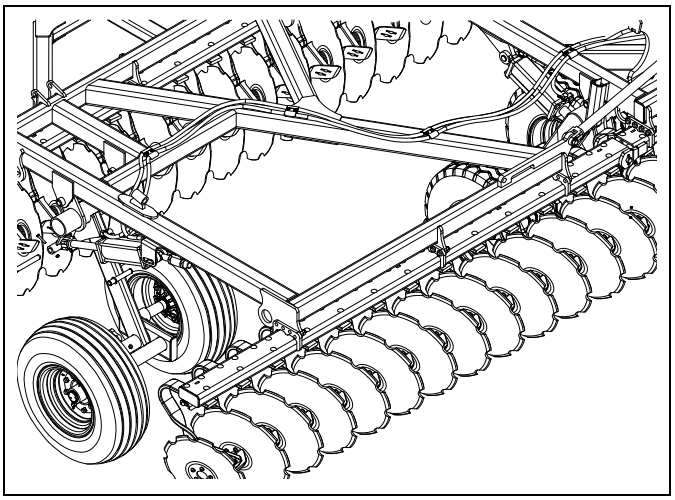

Figure 30 36602
Wing Hose Route

Install Cylinder

Refer to Figure 31 (some axle components hidden for clarity)

1. Select one:
   (22) 559-225D PIN-1DX6.5
   and two sets:
   (26) 800-085C SNAP RING EXT 1 HEAVY
   (59) 804-192C WASHER MACH 1.5X1.00X.075
   If the snap rings are pre-installed on the pin, remove only the snap ring and washer on one end.
2. Pin the base end of the cylinder under the outside wing tube. With a snap ring (26) and washer (59) on the pin (22), insert the pin through the wing bracket, cylinder clevis and eyebolt. Secure with washer and snap ring.
3. Select one set:
   (62) 805-404C PIN 1.0X6.42 USBL HRD PLT
   (39) 802-382C HHCS 3/8-16X2 1/4 GR5
   (49) 803-123C NUT HEX TOP LOCK 3/8-16 PLT
   Use the tractor lift circuit to align the rod end clevis with the upper axle pivot hole. Secure with pin (62). Secure pin with bolt (39) and lock nut (49).
4. Arrange the hoses to:
   - provide a droop through the wing fold center-line, and
   - enough slack at the wing cylinders to allow their normal pivot range during raise/lower.
5. Repeat step 1 through step 4 for the right wing.

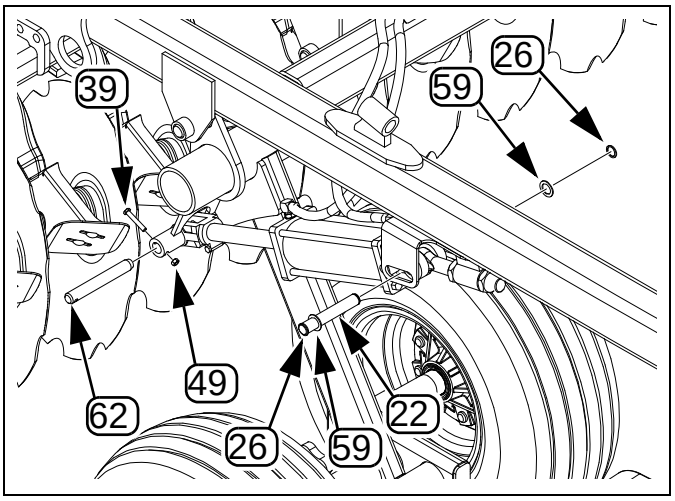

Figure 31 36603
Wing Cylinder Pins

Check Lift

1. Raise the implement. Set circuit to Neutral to hold at raised.
2. Remove the lift lock channels.
3. Fully raise and lower the implement to check circuit function and hose slack at wing cylinders.
4. Fully raise. Re-install lift lock channels.
5. Tighten bolts at wing hose clamps.

Harnesses and Lights

Route and Connect Harnesses

Refer to Figures 35 and 36 on pages 29 and 30 for larger views.

1. Select one:
   (76) 833-701C LIGHT HARNSS LEAD W/ VALVE LED

   Connect the 6-pin end of the harness (76) to the LED module (73) (pre-installed).

   Route forward along the hoses. Loosely secure above hose clamps with cable ties. Do not run harnesses under hose clamps. Leave some slack at the tongue pivot, but keep the harness above the tongue.

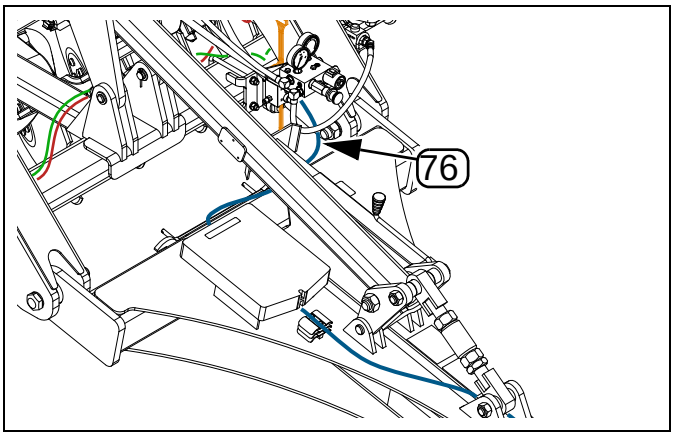

Figure 32
Hitch Harness
36608

2. Select one:
   (77) 833-702C LIGHT HARNESS DUAL AMBER - LED

   Connect the 6-pin end of the light harness (76) to the LED module (73).

   Route the 3-pin leads, and the two longer 2-pin leads along the hoses to the rear of the mainframe. Leave enough slack at frame opening ① such that a later installation of weights will not put the harness in tension.

   Route the shorter 2-pin lead color coded yellow to the left front lighting mount plate ②. Route this lead on top of the frame tube, under the truss and behind any vertical weldments.

   Route the shorter 2-pin lead color coded green to the right front lighting mount plate ③. Route this lead on top of the frame tube, under the truss and behind any vertical weldments.

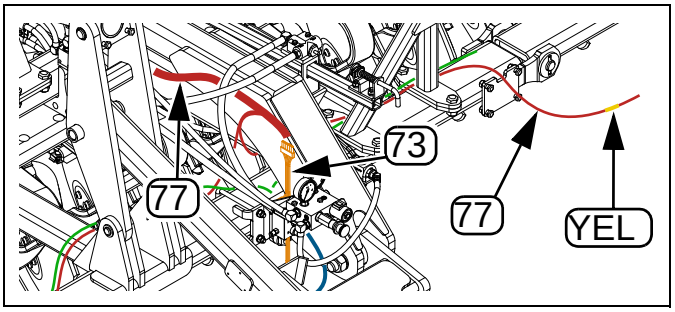

Figure 33
Lighting Harness
36608

3. Select one:
   (80) 891-327C FOLD ASSIST HARNESS

   Connect the 2-pin leads to the hitch harness (76) and to the solenoid of the down-pressure valve (70).

   Route one 4-pin lead to near each proximity sensor bracket (23) at the front wing hinge pins.

Continue on page 31.

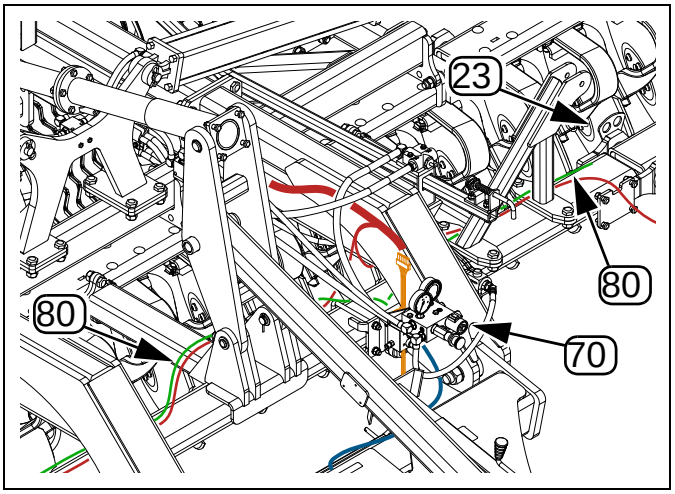

Figure 34
Fold Sensor Harness
36608

Short Disk™ Harness Connections

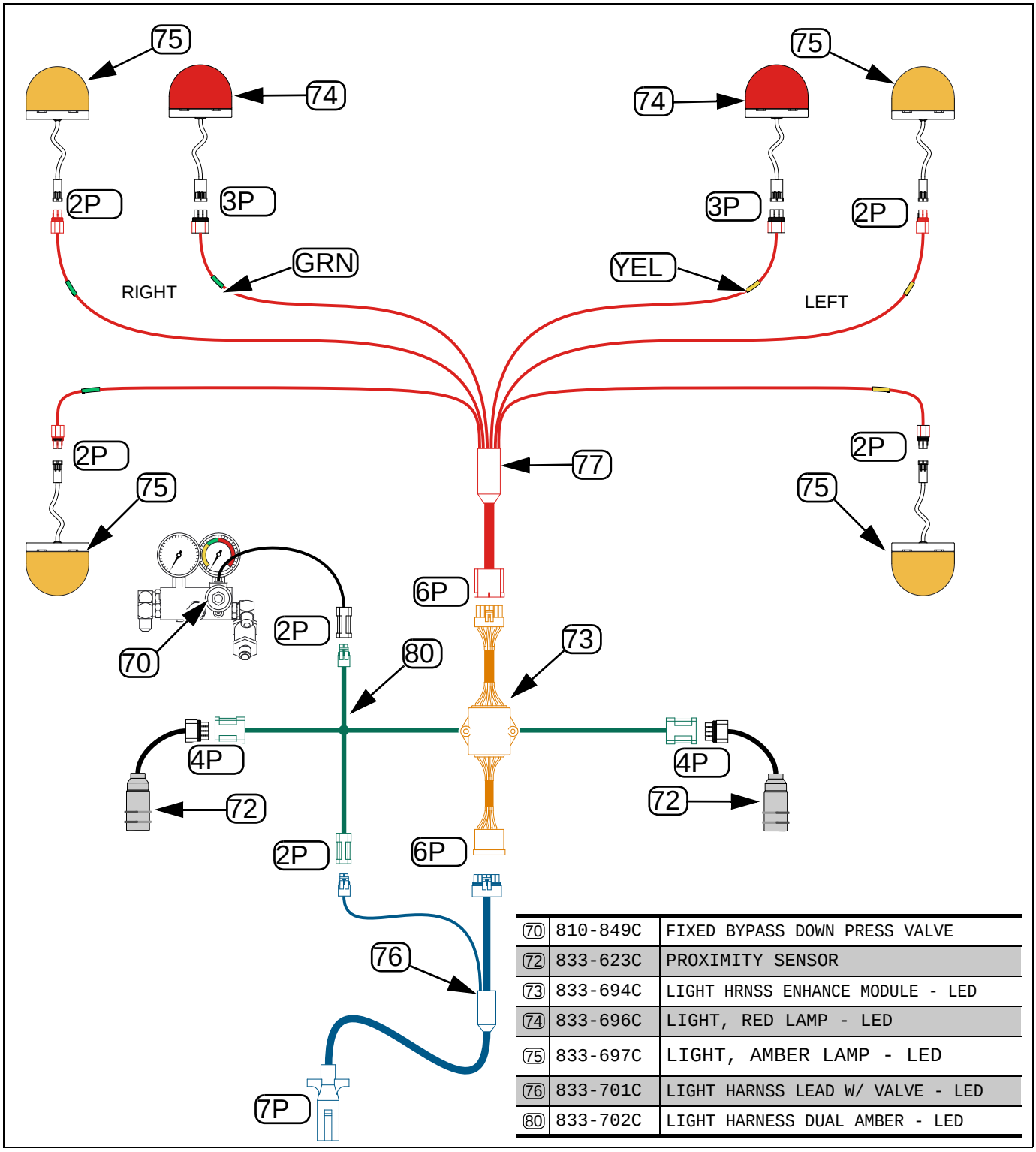

70	810-849C	FIXED BYPASS DOWN PRESS VALVE
72	833-623C	PROXIMITY SENSOR
73	833-694C	LIGHT HRNSS ENHANCE MODULE - LED
74	833-696C	LIGHT, RED LAMP - LED
75	833-697C	LIGHT, AMBER LAMP - LED
76	833-701C	LIGHT HARNSS LEAD W/ VALVE - LED
80	833-702C	LIGHT HARNESS DUAL AMBER - LED

Figure 35
Harness Connections

36607

Harness Routing

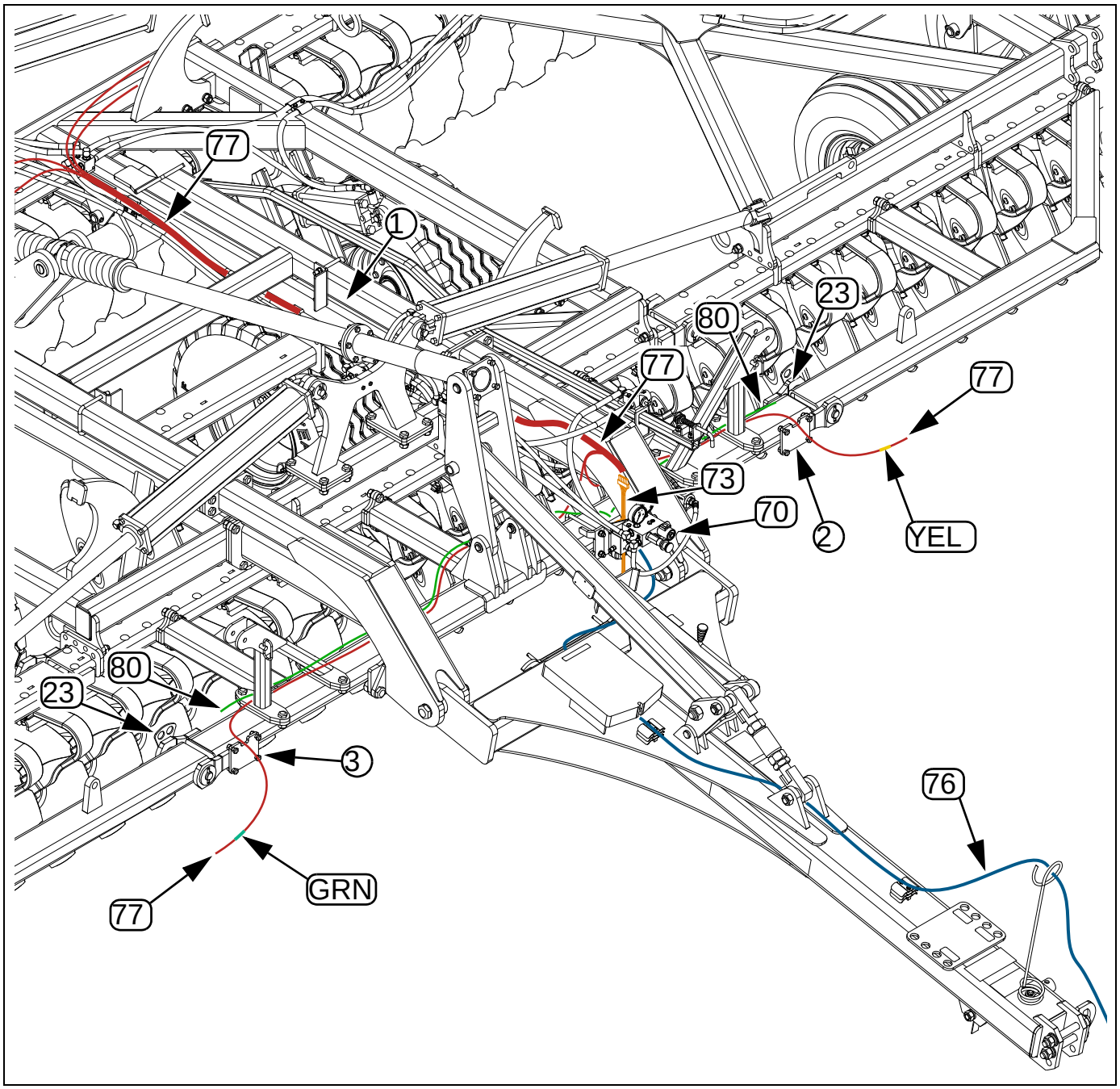

Figure 36
Harness Routing

36607

Install Front LED Lights (Amber)

Start with the left side.

Install Light Bracket

Refer to Figure 38 (which also depicts the local harness (80) routing at the light bracket)

Install Amber LED Lights

1. Select one of:
   (25) 589-444H TM LIGHT BRKT RF/LR (left)
   (25) 589-445H TM LIGHT BRKT LF/RR (right)
   and four sets:
   (30) 802-034C HHCS 1/2-13X1 1/4 GR5
   (54) 804-015C WASHER LOCK SPRING 1/2 PLT
   (45) 803-020C NUT HEX 1/2-13 PLT
2. Align the bracket (25) mounting plate with the notch up and the arm bending to implement outside. Secure with bolts (30), lock washers (54) and nuts (45).
3. If not already installed on the bracket, select one:
   (75) 833-697C LIGHT, AMBER LAMP LED
   and four sets:
   (28) 802-224C HHCS 1/4-20x1-1/4 GR5
   (42) 803-007C NUT LOCK 1/4-20 PLT
4. Route the lead through the hole in the bracket plate. The lens assembly may face in either direction. Secure with bolts (28) and lock nuts (42). To avoid cracking the polymer lens base, do not exceed Grade 2 torque specification.
5. Use cable ties to secure harnesses.
6. Repeat step 1 through step 5 for the right side.

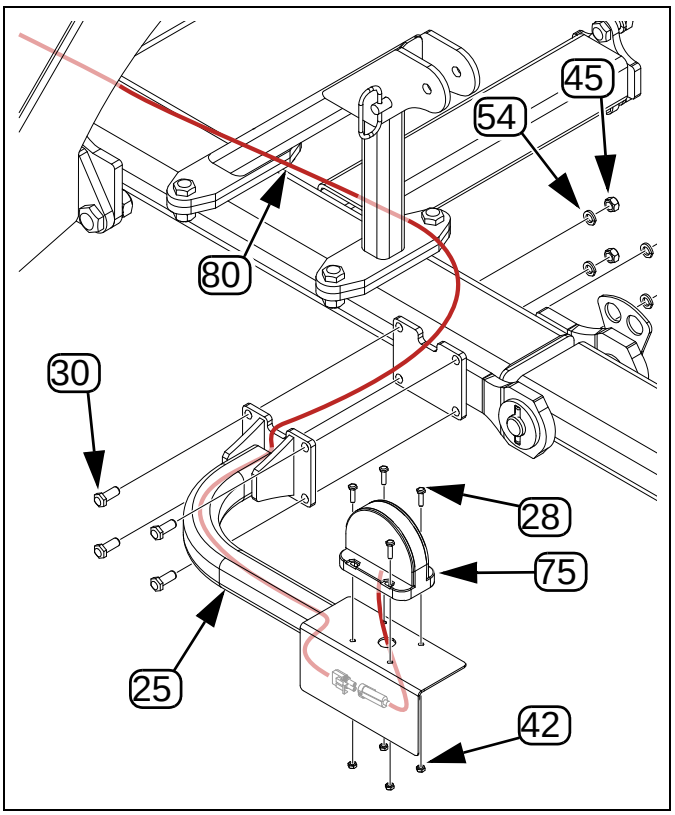

Figure 37 36605
Front Amber LED Light

About Rear Lights

Rear light installation depends on the finishing option ordered (if any), attachment bar ordered, or simple light bracket ordered if no finishing equipment is used.

Install the finishing equipment, attachment bar or light bracket first (but after completing the steps remaining in this section). The instructions are found in the "**Option Installation**" section beginning on page 33. Rear light installation instructions are found at the end of that section, and are referenced by the option instructions.

Install Proximity Sensors

First Fold

Refer to Figure 38

The implement must be hitched to a tractor, and raised with lock channels ① installed for these steps. Level circuit, if present is in Neutral or disconnected.

1. Verify that the wing lock pins ② are not in the outer lock holes (see Operator manual for details).
2. Open the wing lock valve ③ (see Operator manual for details).
3. Clear all persons from around the implement.
4. Be aware of vertical clearance required for folding.
5. Slowly move fold circuit lever to Retract. Observe the fold operation.

📖 Watch for leaks and make sure hoses do not get pinched during the initial unfolding process.

6. Wait for both wings to reach the fully folded position. Set the fold circuit to Neutral to hold at fold.
7. Shut down the tractor.
8. Close the wing fold lock valve.
9. Install the wing lock pins.

Figure 38
Lock Locations
36528

Install Sensors

Start with the left wing.

Refer to Figure 39

1. Select one:
   ⑫ `833-623C PROXIMITY SENSOR`
   Remove the outer jam nut.
2. Insert the sensor through the inner hole in the sensor bracket ㉓. Add the removed jam nut to the face end of the sensor.
3. Check the gap ② between the face of the sensor ① and the wing tube. The correct gap is:
   $^{1}/_{8}$ inch to $^{1}/_{4}$ inch (3.2 to 6.4 mm)
4. To adjust the gap, loosen nuts ③ (one on each side of the sensor bracket). Rotate nuts to achieve correct gap.
5. Re-tighten nuts to secure proximity sensor.

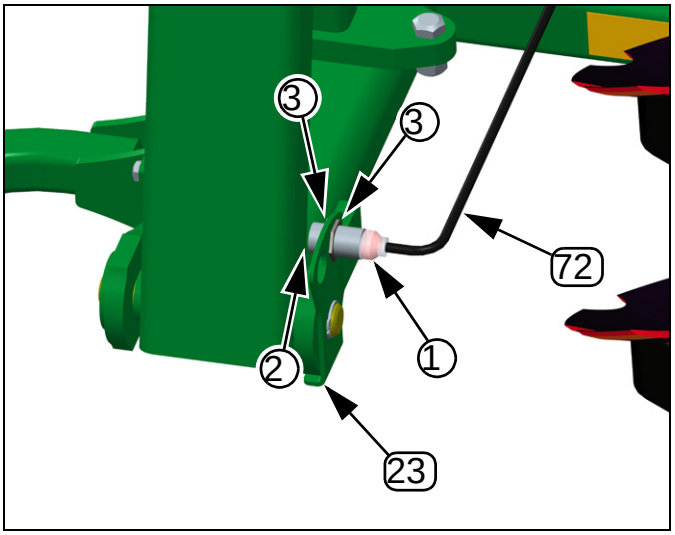

Figure 39
Proximity Sensor
36541

Option Installation

Install Light Brackets

Applies only to Option 42, kit:
559-203A REAR LIGHT BRACKETS-SD
This Option is only used, and is required, when no other finishing Option or attachment bar is in use.

Start with the left side on the implement.

Refer to Figure 40 and Figure 41 (left side view)

1. Select one of:
   (38) 559-201H LIGHT BRACKET RF/LR-SD (right)
   (39) 559-202H LIGHT BRACKET LF/RR-SD (left)
   and two:
   (87) 806-202C U-BOLT 1/2-13X3 1/32X7 1/4
   and four sets:
   (78) 804-015C WASHER LOCK SPRING 1/2 PLT
   (68) 803-020C NUT HEX 1/2-13 PLT
2. Loosely assemble the bracket on the gang tube, with the lamp base ① to the outside, breaks down.

   Adjust the position for a distance from implement center-line to the inside edge of the bracket mounting plate of:
   ⓐ SD2600 & SD3000: 33 inches (838 mm)
   SD3300: 48 7/8 inches (1241 mm)
   Secure the nuts to torque spec.
3. Select one:
   (3) 556-231D LIGHT MOUNTING BRACKET (right)
   and two:
   (84) 806-159C U-BOLT 1/2-13 X 5 1/32 X 4 1/2
   and four sets:
   (78) 804-015C WASHER LOCK SPRING 1/2 PLT
   (68) 803-020C NUT HEX 1/2-13 PLT
4. Loosely assemble the bracket (3), break up and pointing rear, on the upper rear frame tube.

   Adjust the position for a distance from implement center-line to the inside edge of the bracket of:
   ⓡ SD2600 & SD3000: $28^{7}/_{8}$ inches (733 mm)
   SD3300: 39 inches (991 mm)
   Secure the nuts to torque spec.
5. Repeat step 1 through step 4 for the right side.
6. Continue at “**Install Rear Lights**” on page 57.

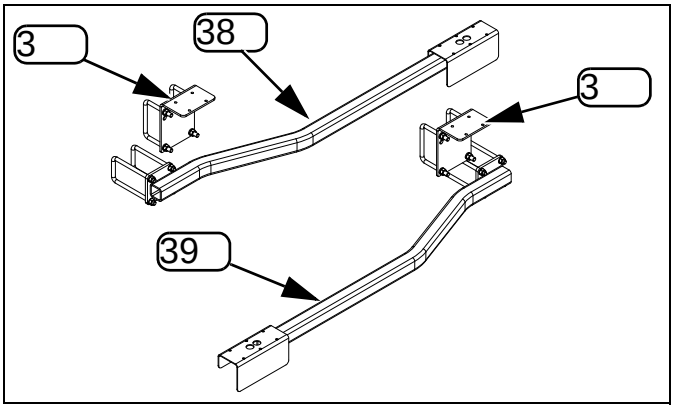

Figure 40
Light Brackets
36557

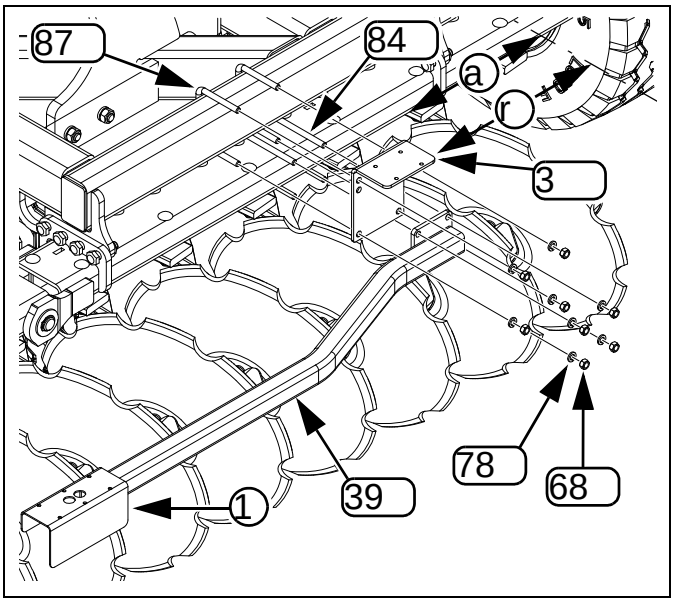

Figure 41
Left Light Bracket
36611

Install Weights

Applies only to kit:
589-047A 1500 LB TT CENTER FRAME WGT KI

Optional weight sets increase the down force available to tools, and increase the weight available for transfer to wings. Each set weighs 1500 pounds (680 kg) and consists of two 750 pound (340 kg) stacks.

⚠ WARNING

Heavy Overhead Object and Crushing Hazards:
A slipped, swinging or falling weight can cause serious injury or death.
Use a lifter rated for at least 750 pounds.
Use separate lines for each lift point.
DO NOT USE a single looped line.
Use anchor points rated for at least 750 pounds each.
Use lines rated for at least 750 pounds each.
Secure each line a separate weight attachment point.
Use only the lifter to coarsely position the stacks.
Keep everyone clear while lifting and positioning.
Keep hands above stacks at all times.
Place weights from front to back.
Slide each into final position before lifting the next.

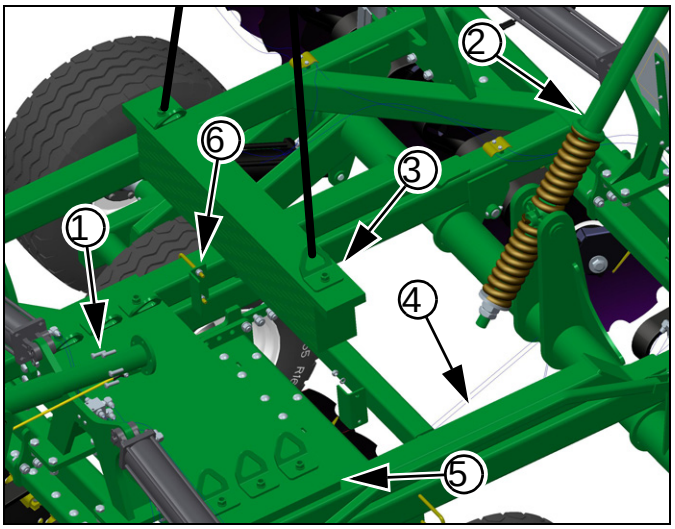

Figure 42 36538
Weight Package

Refer to Figure 42

📖 Use up to 2 sets of 2 weights (4 weight stacks total) in positions shown.

1. Unfold implement. Lower implement to ground. Float fold circuit. Float lift circuit.
2. Adjust fore/aft to take pressure off leveling link. Once pressure is off leveling link proceed.
3. Remove the $^{1}/_{2}$-13 × $1^{3}/_{4}$ inch Grade 5 bolts ① from the level bar assembly.
4. Pivot the level bar ② up for clearance.
5. Verify that hoses will not be pinched by the weights.
6. Securely attach two separate lines, each rated for at least 750 pounds (340 kg), to a similarly rated anchor point on the lifter, and to a stack lifting lug. Do not use a single looped line - it can slip or fail.
7. Carefully lower each weight assembly ③ into center frame trusses ④.
8. Slide weights ⑤ as far forward as possible and install weight box stops ⑥ on inside of trusses as close to weights as possible, secure with $^{1}/_{2} \times 4^{1}/_{32} \times 5^{1}/_{4}$ U-bolt, $^{1}/_{2}$ inch lock washers and $^{1}/_{2}$ inch nuts.
9. Torque U-bolts to 85 foot-pounds.
10. Pivot level bar and the level bar spring assembly until holes in plates are aligned.
11. Re-install $^{1}/_{2}$-13 × $1^{3}/_{4}$ Grade 5 bolts ①, secure with $^{1}/_{2}$ inch lock washers and $^{1}/_{2}$ inch nuts.
12. Torque $^{1}/_{2}$-13 × $1^{3}/_{4}$ Grade 5 bolts ① to 76 foot-pounds (103 N-m) to be sure bolts do not work loose and cause damage to machine.

⚠ CAUTION

Possible Transport Hazard:
Do not transport the updated Short Disk™ before verifying that the vehicle used for highway transport is still adequate for the new weight. If the towing vehicle was previously just over requirements, it may be inadequate now, increasing the risk of a serious highway accident. Your total implement weight has increased by as much as 19% (increased up to 3000 pounds or 1340 kg).

Install Wing Gauge Wheels

Applies only to Option 62, kit:
559-086A SDH GAUGE WHL KIT

Start with the left side on the implement.

Install Weldment Assembly

Refer to Figure 43 (left side view - this depicts the wheel assembly already on the gauge wheel assembly - in general it is easier to mount the wheels later, as per steps below)

1. Select one of:
   (5) 559-073L GAUGE WHL-SDH LH ASM (left)
   (4) 559-068L GAUGE WHL-SDH RH (right)
2. Remove and save two:
   (72) 803-032C NUT HEX JAM 1 1/4-7 PLT
3. Remove snap rings (53), washers (81), remove and save (four places):
   (53) 800-085C SNAP RING EXT 1 HEAVY
   (81) 804-192C WASHER MACH 1.5X1.00X.075
   (20) 559-117D GAUGE WHEEL PIN-1ODX6.40
   Leave the roll pins in the gauge wheel pins.
4. Partially insert the turnbuckle eyebolt into the frame receiver tube ①. Align the rear pivot tubes of the gauge wheel parallel arms with the lugs at the corner of the center frame. Insert pins to secure arms. Add jam nuts to turnbuckle.
5. Fully seat arm pins, with roll pins in front of faces of anti-rotation plates. Add machine washers at the inside ends. Secure with snap rings.

Mount Wheel

Refer to Figure 44

6. Select one:
   (97) 814-538C TIRE/WHL 12.5LX15 12 PLY BKSN
   and eight:
   (74) 803-219C NUT LUG 5/8-18 X 90 DEG PLT
7. With the valve stem facing away from the hub, secure the wheel (97) to the hub with the lug nuts (74). Tighten to 85 to 100 foot-pounds (115 to 136 N-m).

Gauge Wheel Pre-Level

Gauge wheels need to be temporarily raised to avoid interference with wing leveling.

Refer to Figure 45

8. Use the turnbuckles ② to adjust the wheels so they are $^{1}/_{2}$ inch above the desired working depth from the ground.

   The factory setting for the turnbuckle is:
   19.0 inches (483 mm)
   measured between eyebolt center-lines.
9. Repeat step 1 through step 8 for the right side.

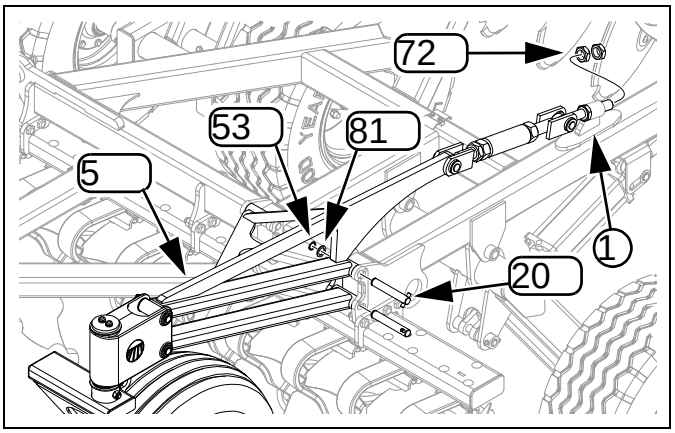

Figure 43
Left Gauge Wheel
36612

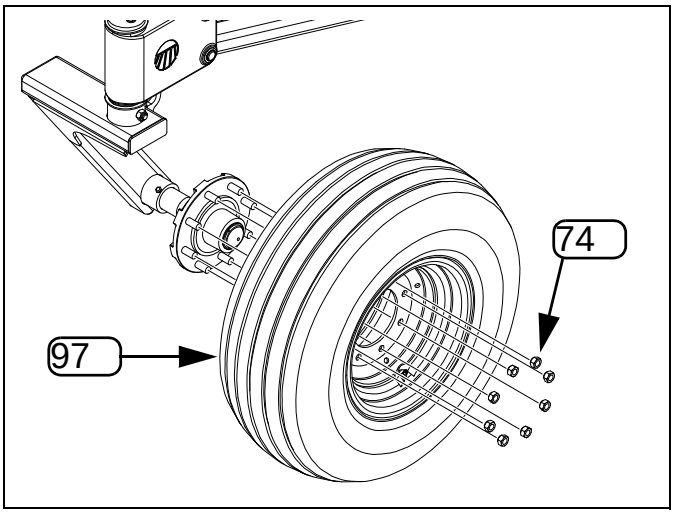

Figure 44
Gauge Wheel Tire Assembly
36619

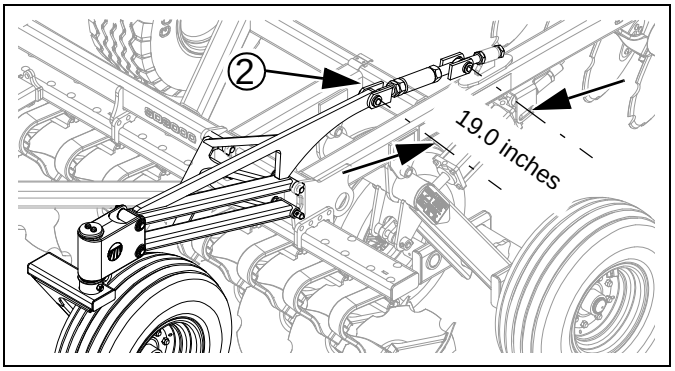

Figure 45
Gauge Wheel Turnbuckle
36555

Install Attachment Bar

Applies only to Option 48, kits:
559-189A ATTACHMENT BAR (SD2600)
559-204A ATTACHMENT BAR 4X3 (SD3000)
559-213A ATTACHMENT BAR 4x3 (SD3300)

Refer to Figure 46

Install Center Bar

1. Select one:
   (6) 559-081H SD ATTACHMENT BAR-CENTER SD2600 & SD3000
   (104)559-211H CENTER ATTACHMENT BAR-SD 33/36 SD3300
   Identify the top by the red lamp mount brackets ①.
2. Select three each:
   (87) 806-202C U-BOLT 1/2-13X3 1/32X7 1/4
   (88) 806-203C U-BOLT 3/4-10 X 5 1/32 X 4 1/2
   and six each:
   (78) 804-015C WASHER LOCK SPRING 1/2 PLT
   (68) 803-020C NUT HEX 1/2-13 PLT
   (80) 804-023C WASHER LOCK SPRING 3/4 PLT
   (71) 803-027C NUT HEX 3/4-10 PLT
3. Attach the bar (6) to the rear frame tube and the rear gang bar, using the $^{3}/_{4}$ inch U-bolts on the frame tube and the $^{1}/_{2}$ inch on the gang tube. Loosely secure them at first, center the bar on the mainframe, then tighten to torque spec.

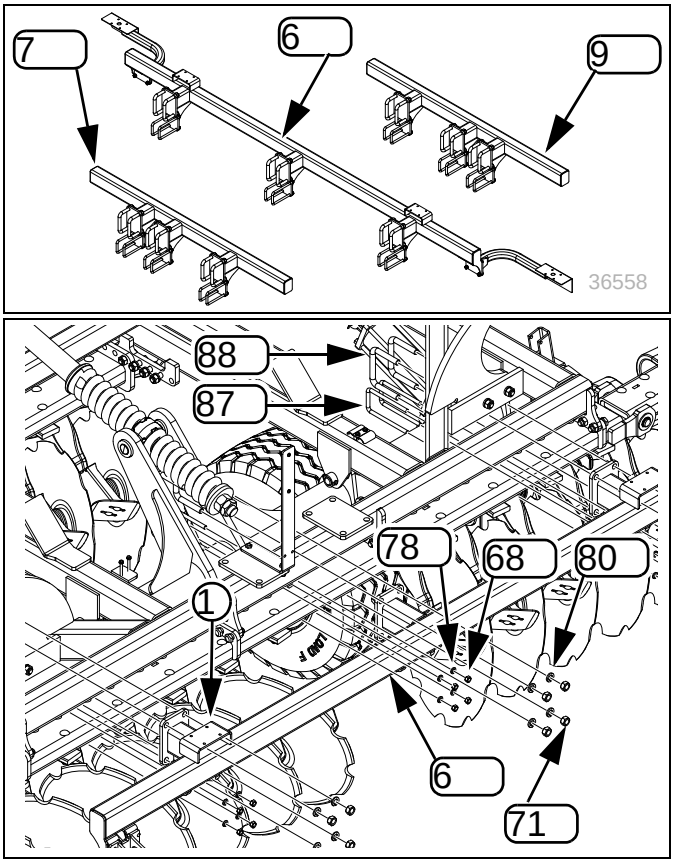

Figure 46 36610
Center Attachment Bar

Install Attachment Bar Light Brackets

Start with the left side.

Refer to Figure 47

1. Select one of:
   (51) 589-444H TM LIGHT BRKT RF/LR
   (52) 589-445H TM LIGHT BRKT LF/RR (not shown)
   and four sets:
   (57) 802-034C HHCS 1/2-13X1 1/4 GR5
   (78) 804-015C WASHER LOCK SPRING 1/2 PLT
   (68) 803-020C NUT HEX 1/2-13 PLT
2. With the notch in the mounting plate up, the arms to the outside, and the break in the luminaire plate down and back, secure the bracket to the center section attachment bar with the bolts (57), lock washers (78) and nuts (68).
3. Repeat step 1 and step 2 for the right end of the center attachment bar.

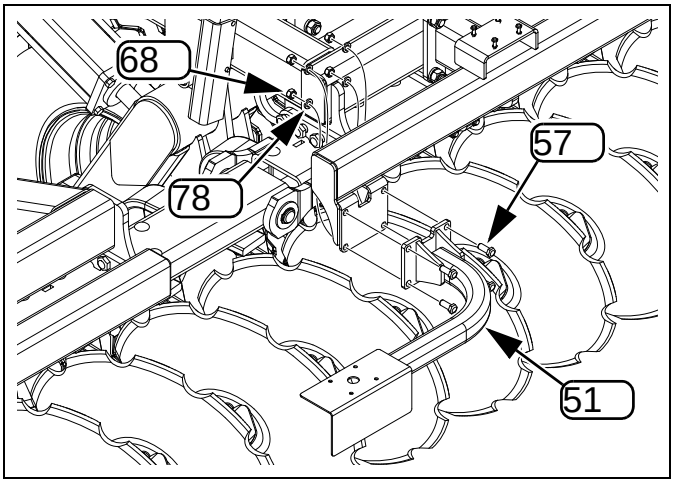

Figure 47 36613
Attachment Bar Light Bracket

Install Wing Bars

Start with the left wing.

Refer to Figure 48

1. Select one of:
   (7) 559-159H LH ATTACHMENT BAR 26'
   LH SD2600
   (107) 559-160H RH ATTACHMENT BAR-SD 26'
   RH SD2600
   (7) 559-084H SD ATTACHMENT BAR
   LH SD3000
   (107) 559-088H SD ATTACHMENT BAR
   RH SD3000
   (199) 559-210H ATTACHMENT BAR WING LH-SD 33'
   (200) 559-209H ATTACHMENT BAR WING RH-SD 33'
   RH SD3300
2. Select three each:
   (87) 806-202C U-BOLT 1/2-13X3 1/32X7 1/4
   (88) 806-203C U-BOLT 3/4-10 X 5 1/32 X 4 1/2
   and six each:
   (78) 804-015C WASHER LOCK SPRING 1/2 PLT
   (68) 803-020C NUT HEX 1/2-13 PLT
   (80) 804-023C WASHER LOCK SPRING 3/4 PLT
   (71) 803-027C NUT HEX 3/4-10 PLT
3. Attach the bar ((7) or (9)) to the wing rear frame tube and the rear gang bar, using the $^{3}/_{4}$ inch U-bolts on the frame tube and the $^{1}/_{2}$ inch on the gang tube. Loosely secure them at first.
   Adjust for a wing gap ③ of:
   SD2600: 19 $^{9}/_{16}$ inches (497 mm)
   SD3000: 19 $^{15}/_{16}$ inches (506 mm)
   SD3000: 20 $^{5}/_{16}$ inches (506 mm)
   Tighten nuts to torque spec.
4. Repeat step 1 through step 3 for the right wing.
5. If installing the attachment bar as part of a Rolling Basket, continue at "**Install Drag Arms**" on page 38.

   Otherwise, continue at "**Install Rear Lights**" on page 57.

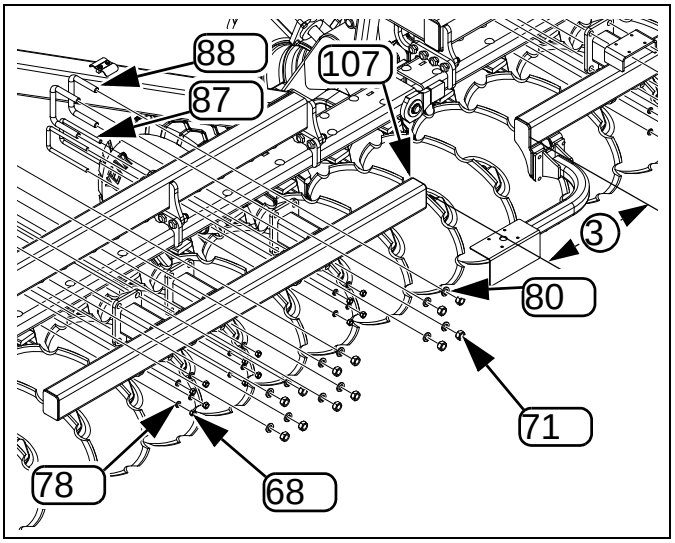

Figure 48
Left Attachment Bar

36610

Install Rolling Basket

Applies only to Option 41 or 45, kits:
559-114A SB/PT CRUMBLER- SINGLE SPIKE
559-123A SB ATTACHMENT
559-169A REEL BSKT SINGLE SPIKE-SD 26’
559-199A SEED BED CONDITIONER-SD 26’
599-218A SB CRUMBLER & COIL TINE-SD 33'
559-219A SB CRUMBLER-SD 33'

Install Attachment Bar for Basket

Install the attachment bar, per the instructions beginning on page 36.

Install Drag Arms

Refer to Figure 49

1. Select one:
   (13) 559-105K SB DRAG ARM
   and two:
   (88) 806-203C U-BOLT 3/4-10 X 5 1/32 X 4 1/2
   and four sets:
   (80) 804-023C WASHER LOCK SPRING 3/4 PLT
   (71) 803-027C NUT HEX 3/4-10 PLT
2. Use a hoist to position the arm (13) at one of the approximate stations shown at the top of the page. Loosely secure it with U-bolts (88), lock washers (80) and nuts (71).
3. Repeat step 1 and step 2 for all six arms.
4. Refer to page 39 (SD2600), page 40 (SD3000), or page 41 (SD3300) for precise placement. Secure nuts to Grade 5 torque spec.
5. Continue at “**Install Tines**” on page 42.

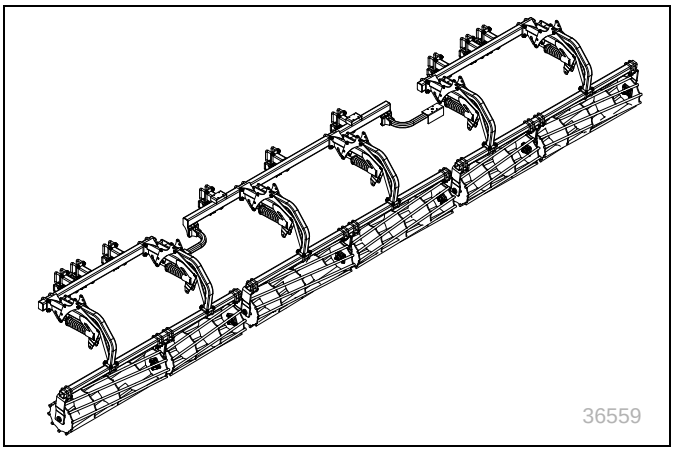

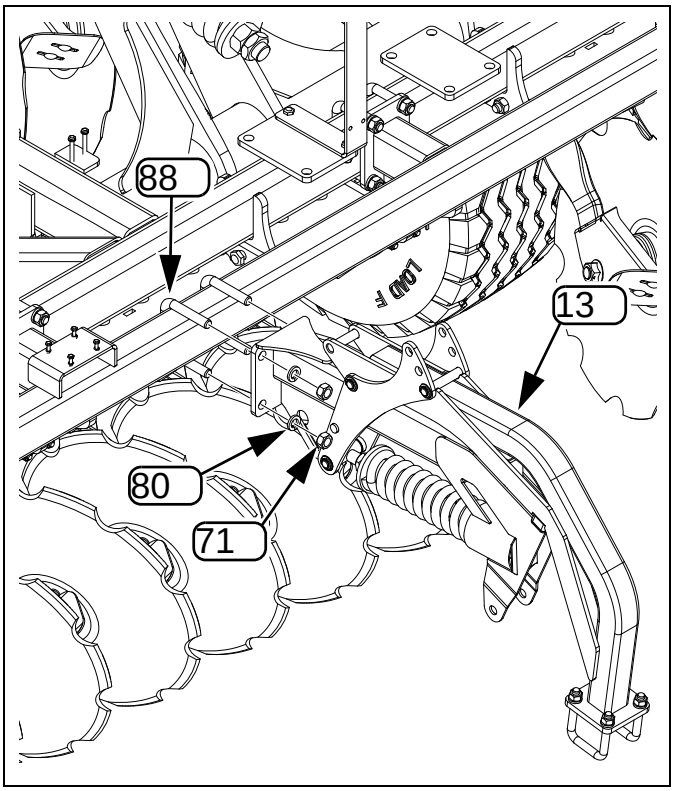

Figure 49
Drag Arm Installation

Basket Roller Spacing Reference: SD2600 (559-169A {shown} and 559-199A)

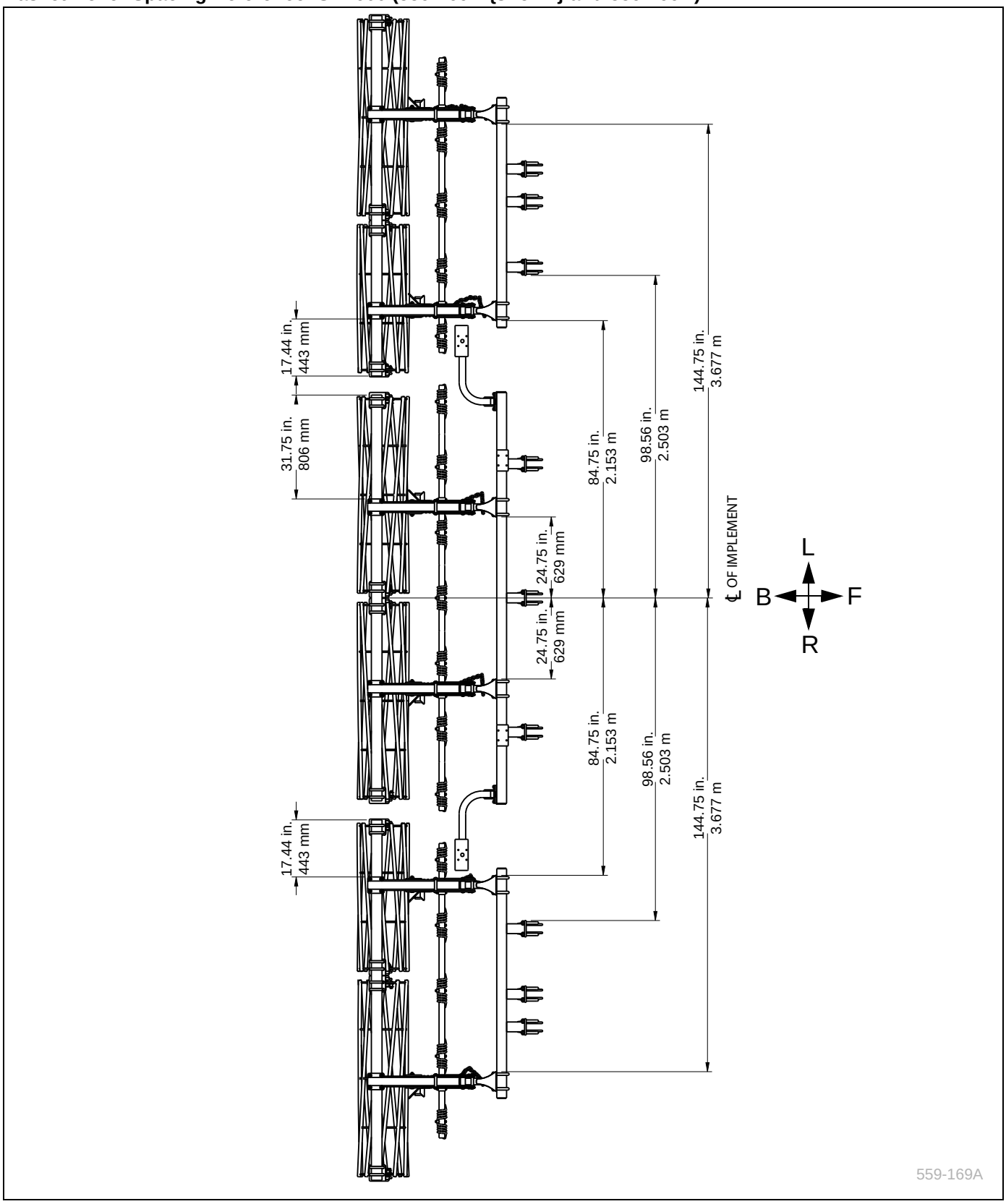

Basket Roller Spacing Reference: SD3000 (559-114A {shown} and 559-123A)

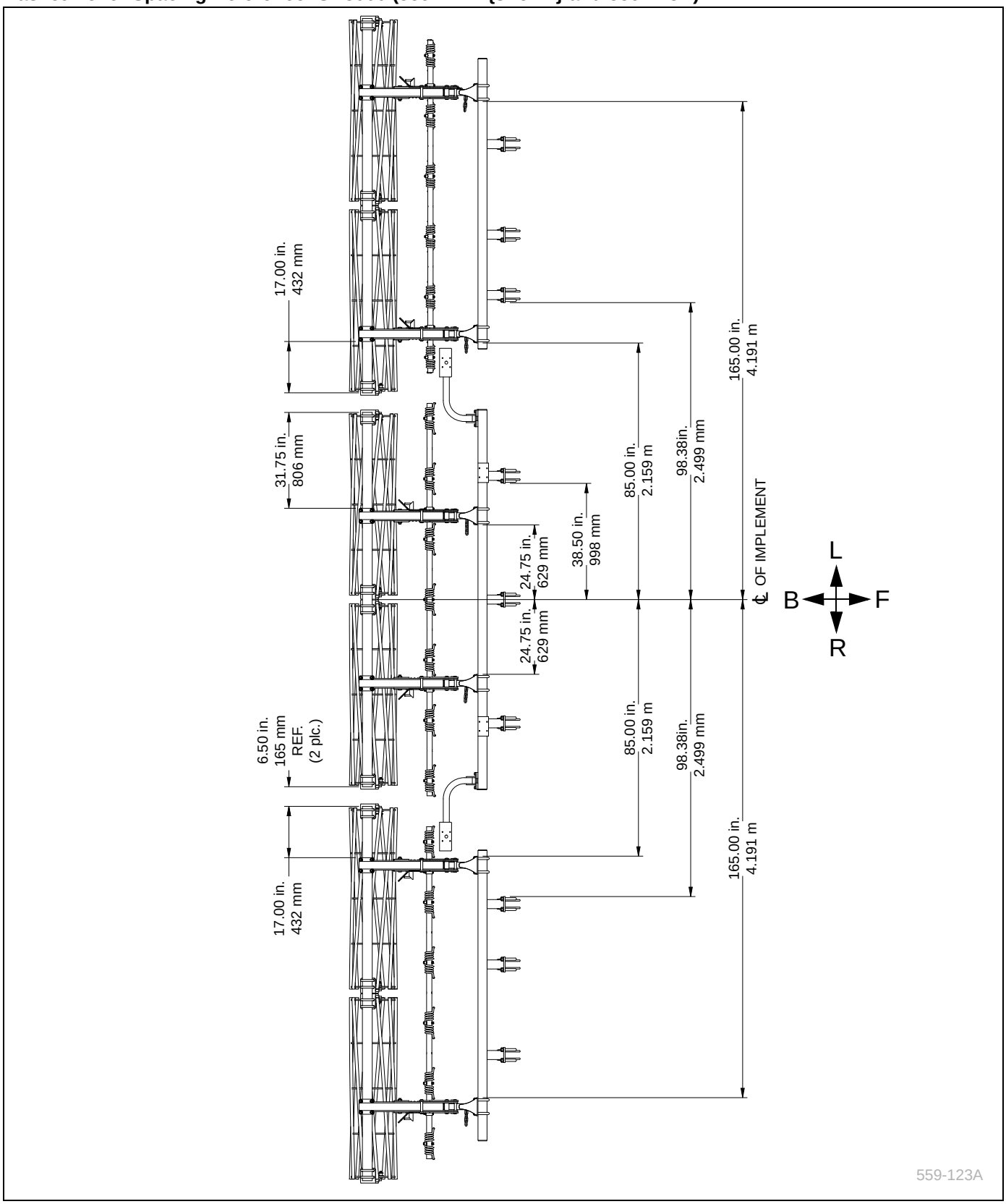

Basket Roller Spacing Reference: SD3300 (559-218A {shown} and 559-219A)

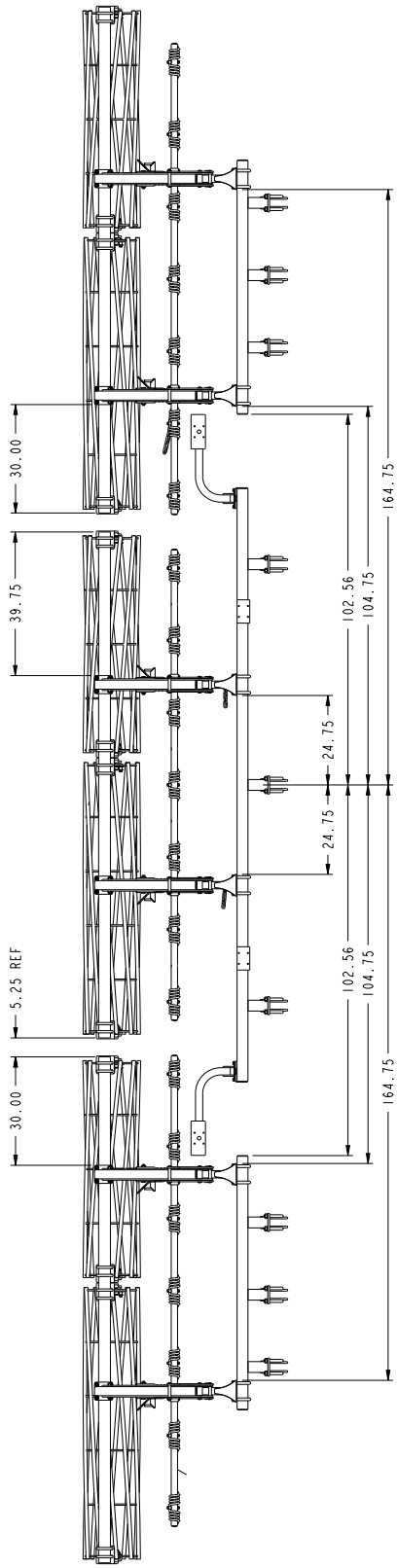

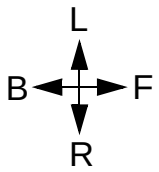

559-123A

Install Tines

For Option kits 599-199A, 599-123A, and 599-219A, which do not include tines, continue at "**Install Baskets**", below. All tine bars are installed in the same manner, but note the levers should always face outward from the center of the machine.

Refer to Figure 50 (showing left end of center section)

1. Select one of:
   (176) 559-113K COIL TINE WING BAR (center bar)
   left wing:
   (16) 559-167K COIL TINE BAR LH-SD 26'
   (16) 559-112K COIL TINE WING BAR
   (197)559-216K COIL TINE
   right wing:
   (15) 559-168K COIL TINE BAR RH-SD 26'
   (15) 559-111K COIL TINE WING BAR
   (197) 559-215K COIL TINE WING
   and two sets:
   (59) 802-192C HHCS 3/4-10X4 1/2 GR5
   (75) 803-367C NUT HEX TOP LOCK 3/4-10 PLT
2. With the tine levers up and to the rear, and the tines angled straight down or to the rear, secure the tine levers to the lower pivot clevis weldments of the drag arm for that tine assembly.

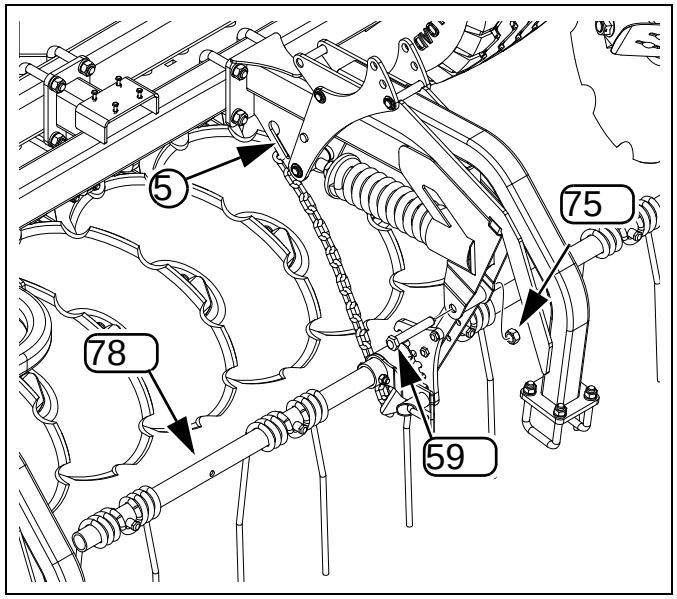

Figure 50 36615
Center Tine, Left End

   Consult page 39 (SD2600), page 40 (SD3000), or page 41 (SD3300) for assembly ID and placement. Secure nuts to snug (not to torque spec).
3. Pull free end of chains through drag arm mount slots ⑤. Leave 5 links hanging free.

Install Baskets

Refer to Figure 51 (showing left end of center section)

1. Select one of:
   (32) 559-166K WING SECTION REEL BASKET-SD LH, RH WINGS SD2600
   (14) 559-106K SB ROLLER-124 CENTER (shown) CENTER SD2600, ALL SECTIONS SD3000
   (199)559-217k ROLLING BASKET 140-SD 3300 ALL SECTIONS SD3300
   and four:
   (86) 806-183C U-BOLT 5/8-11X3 1/32X4 1/2 SPT
   and eight sets:
   (79) 804-022C WASHER LOCK SPRING 5/8 PLT
   (69) 803-021C NUT HEX 5/8-11 PLT
2. Consult page 39 (SD2600), page 40 (SD3000), or page 41 (3300) for basket orientation (roller bar angle to the rear at top center) and rough placement.
3. Loosely attach the basket tube to each of two drag arms on the section. Adjust position to dimensions from page 39, page 40, or page 41. Tighten nuts to Grade 5 torque spec.
4. Continue at "**Install Rear Lights**" on page 57.

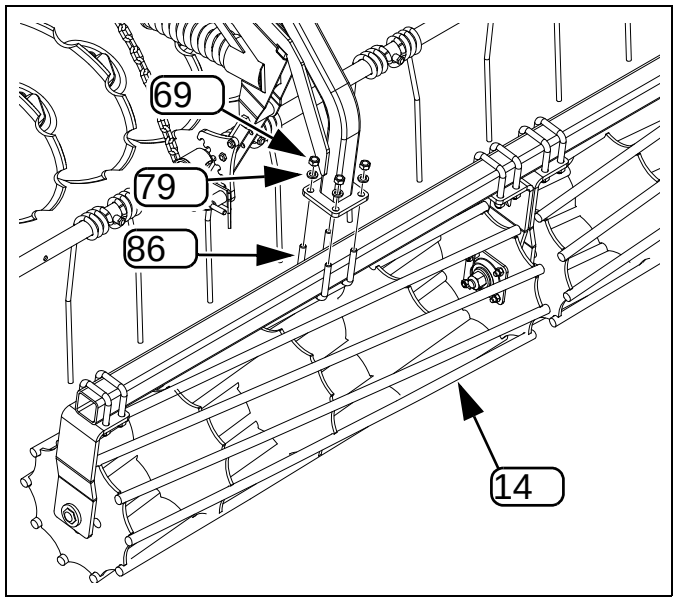

Figure 51 36616
Center Basket, Left End

Install Cast Roller

Applies only to Option 47, kits:
559-195A PACKING ROLLER-SD 26′
559-115A SD - 30 FT ATTACHMENT ROLLER
559-225A PACKING ROLLER - SD 33′

Install Roller Pivots

See page 53 (SD2600), page 54 (SD3000), or page 55 (SD3300) for exact dimensions from center-line for pivot placement.

Install Roller Pivots for Cylinders

Refer to Figure 52

1. Select four:
   (23) 559-120H BRKT-ROLLER CYL PVT
   and eight each:
   (87) 806-202C U-BOLT 1/2-13X3 1/32X7 1/4
   (88) 806-203C U-BOLT 3/4-10 X 5 1/32 X 4 1/2
   and sixteen sets:
   (78) 804-015C WASHER LOCK SPRING 1/2 PLT
   (68) 803-020C NUT HEX 1/2-13 PLT
   (80) 804-023C WASHER LOCK SPRING 3/4 PLT
   (71) 803-027C NUT HEX 3/4-10 PLT
2. Loosely install two pivots (23) on the outside ends of the center section rear frame tube and gang bar.

   Loosely install one pivot (23) at the center of each wing rear frame tube and gang bar.

Install Roller Pivot With Indicator

3. Select one:
   (26) 559-130H BRKT-ROLLER PVT W/ GAUGE
   and two each:
   (87) 806-202C U-BOLT 1/2-13X3 1/32X7 1/4
   (88) 806-203C U-BOLT 3/4-10 X 5 1/32 X 4 1/2
   and four sets:
   (78) 804-015C WASHER LOCK SPRING 1/2 PLT
   (68) 803-020C NUT HEX 1/2-13 PLT
   (80) 804-023C WASHER LOCK SPRING 3/4 PLT
   (71) 803-027C NUT HEX 3/4-10 PLT
4. Loosely install this pivot (26) at the inside of the left wing.

Install Other Roller Pivots

5. Select four:
   (22) 559-119H BRKT-ROLLER PVT
   and eight each:
   (87) 806-202C U-BOLT 1/2-13X3 1/32X7 1/4
   (88) 806-203C U-BOLT 3/4-10 X 5 1/32 X 4 1/2
   and sixteen sets:
   (78) 804-015C WASHER LOCK SPRING 1/2 PLT
   (68) 803-020C NUT HEX 1/2-13 PLT
   (80) 804-023C WASHER LOCK SPRING 3/4 PLT
   (71) 803-027C NUT HEX 3/4-10 PLT
6. Loosely install one pivot (120) at the center of the center section rear frame tube and gang bar.

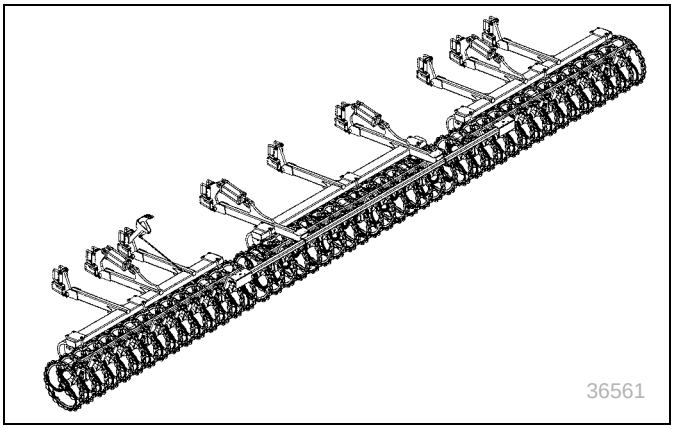

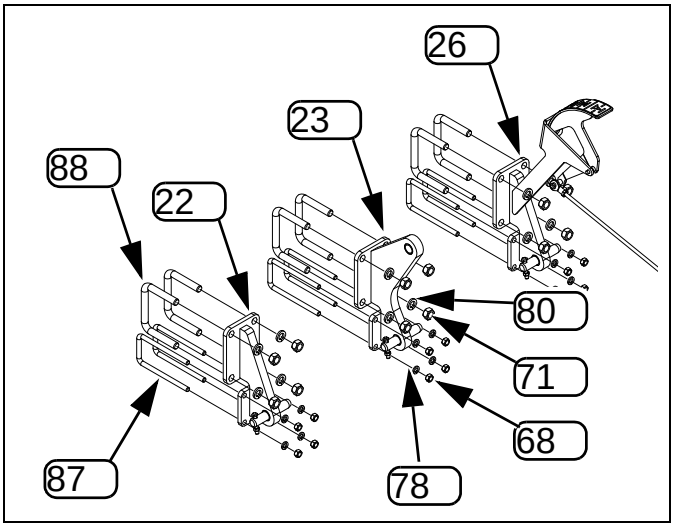

Figure 52
Roller Pivots

Loosely install one pivot (120) at the outside end of the left wing rear frame tube and gang bar.

Loosely install two pivots (120) at the inside and outside ends of the right wing rear frame tube and gang bar.

Install Roller Frames

Install Center Roller Frame

Refer to Figure 53 (a Parts manual illustration)

1. Select one:
   (27) 559-149H CENTER GANG PIVOT
   (125) 559-223H CENTER ATT PACKING ROLL-SD 33'
   and three sets:
   (82) 805-292C PIN 1.0X4.42 USBL HRD PLT
   (63) 802-623C HHCS 3/8-16X2 1/4 GR8 SPTHD
   (73) 803-123C NUT HEX TOP LOCK 3/8-16 PLT
2. With the cylinder lugs ① up. Align the frame pivots with the pivot weldments mounted on the mainframe. Secure hinge points with pins (82), bolts (63) and nuts (73).
3. Verify that the center pivot weldment is on machine center-line, and secure the bolts there. Verify that the remaining pivots swing freely, and secure the nuts there.

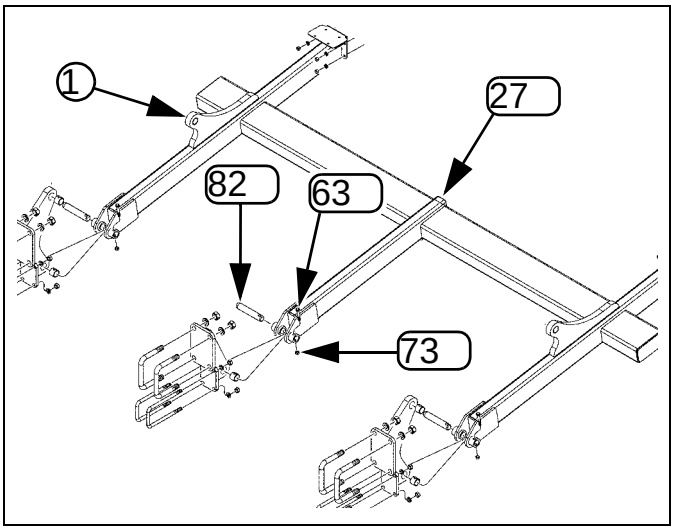

Figure 53 36521
Center Roller Frame

Install Left Wing Roller Frame

Refer to Figure 54 (a Parts manual illustration)

4. Select one of:
   (28) 559-192H LH GANG SUPPORT-SD 26'
   (28) 559-150H ROLLER FRAME-30FT LH WING
   and three sets:
   (82) 805-292C PIN 1.0X4.42 USBL HRD PLT
   (63) 802-623C HHCS 3/8-16X2 1/4 GR8 SPTHD
   (73) 803-123C NUT HEX TOP LOCK 3/8-16 PLT
5. With the cylinder lug ① up. Align the frame pivots with the pivot weldments mounted on the mainframe. Secure hinge points with pins (82), bolts (63) and nuts (73).
6. Verify that the inside face of the inside pivot weldment is at the dimension from venter-line shown on page 53 (SD2600), page 54 (SD3000), or page 55 (SD3300), and secure the bolts there. Verify that the remaining pivots swing freely, and secure the nuts there.
7. Connect the indicator link (12) to the $^{3}/_{8}$-16 bolt ② welded on the frame.

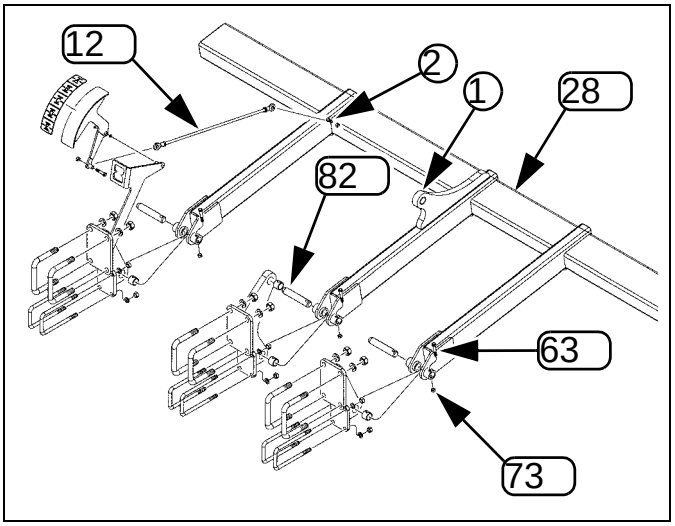

Figure 54 36572
Left Wing Roller Frame

Install Right Wing Roller Frame

Refer to Figure 54 (a Parts manual illustration)

8. Select one of:
   (126) 559-193H RH GANG SUPPORT-SD 26'
   (126) 559-151H ROLLER FRAME-30FT RH WING
   and three sets:
   (82) 805-292C PIN 1.0X4.42 USBL HRD PLT
   (63) 802-623C HHCS 3/8-16X2 1/4 GR8 SPTHD
   (73) 803-123C NUT HEX TOP LOCK 3/8-16 PLT
9. With the cylinder lug ① up. Align the frame pivots with the pivot weldments mounted on the mainframe. Secure hinge points with pins (82), bolts (63) and nuts (73).
10. Verify that the inside face of the inside pivot weldment is at the dimension from center-line shown on page 53 (SD2600), page 54 (SD3000), or page 50 (SD3300), and secure the bolts there. Verify that the remaining pivots swing freely, and secure the nuts there.

Install Cylinders

Install Center Cylinders

📖 The center section uses the larger $3^{3}/_{4}\times6\times1^{3}/_{8}$ cylinders.

Refer to Figure 55 (a Parts manual illustration)

1. Select two of:
   (90) 850-040C CYL REP 3.75X6X1.38 TIE 3000#
   These cylinders include fastening hardware.
2. With hydraulic ports facing up, secure the base end of each cylinder to the pivot weldment on the mainframe. Secure the rod end to the pivot frame lug.

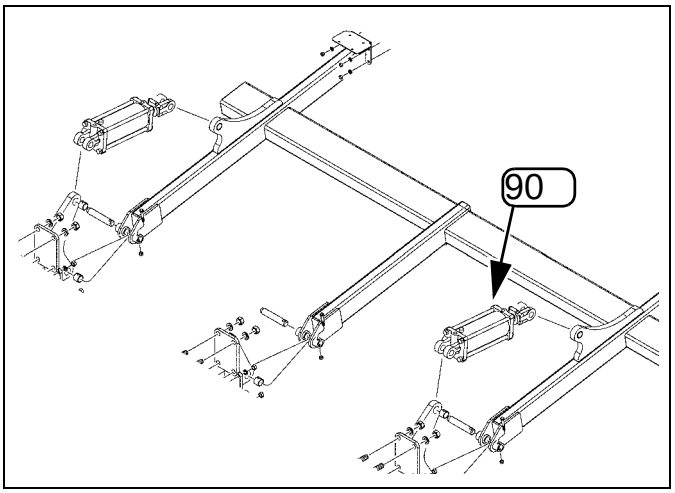

Figure 55 36521
Center Roller Frame Cylinders

Install Wing Cylinders

📖 The wings use the smaller $3^{1}/_{2}\times6\times1^{1}/_{4}$ cylinders.

Refer to Figure 56 (a Parts manual illustration)

3. Select two of:
   (89) 850-041C CYL REP 3.50X6X1.25 TIE 3000#
   These cylinders include fastening hardware.
4. With hydraulic ports facing up, secure the base end of each cylinder to the pivot weldment on the mainframe. Secure the rod end to the pivot frame lug.

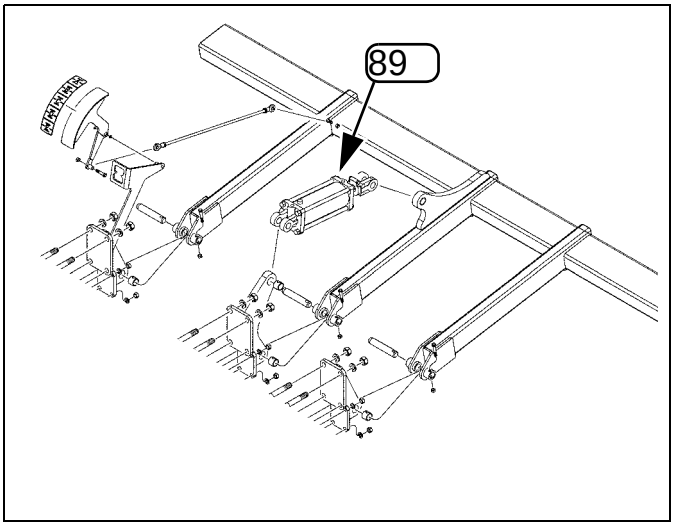

Figure 56 36572
Left Wing Roller Cylinder

Install Cast Roller Hydraulics

Install Elbows on Cylinders

Refer to Figure 66 on page 50

1. Select eight:
(92) 811-063C EL 3/4MJIC 3/4MORB

2. Install Elbows and Orifice Plates

Install one elbow (92) on each base port of each cylinder. Install one orifice plate (196-430D) and elbow on each rod port of each cylinder. Be sure 1/16 inch orifices are in the rod end ports. Point the JIC end to machine front.

3. Install Double Tee Block

SD2600:

Refer to Figure 57

802-197C (2) HHCC 5/16-18X2-3/4 GR5

804-009C (2) 5/16 LOCK WASHER

803-008C (2) NUT HEX 5/16-18 PLT

811-063 (2) EL 3/4MJIC 3/4MORB

811-088C (4) AD 3/4MORB 3/4MJIC

Mount the tee block(560-536D) ② on SMV bracket with hardware. Install straight fitting on RH and LH sides of double tee block and elbows in rear of double tee block.

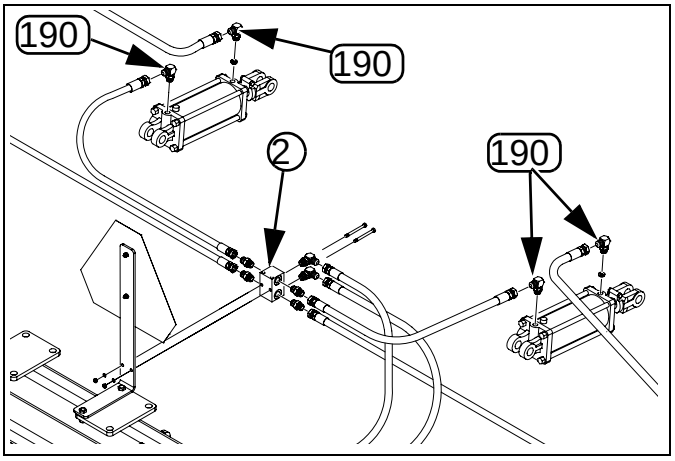

Figure 57 36851
Install Double Tee, 2600

SD3000:

Refer to Figure 58

802-279C (4) HHCS 5/16-18X4 GR5

804-009C (4) WASHER LOCK SPRING 5/16 PLT

803-008C (4) NUT HEX 5/16-18 PLT

811-063C (2) EL 3/4MJIC 3/4MORB

811-088 (4) AD 3/4MORB 3/4MJIC

559-288D (1) BRACKET

Install attachment plate (559-288D) ① onto the attached double tee block being used for fold cylinders, then install double second tee block (560-536D) ②, with hardware. Install straight fitting on RH and LH sides of double tee block and elbows in rear of double tee block.

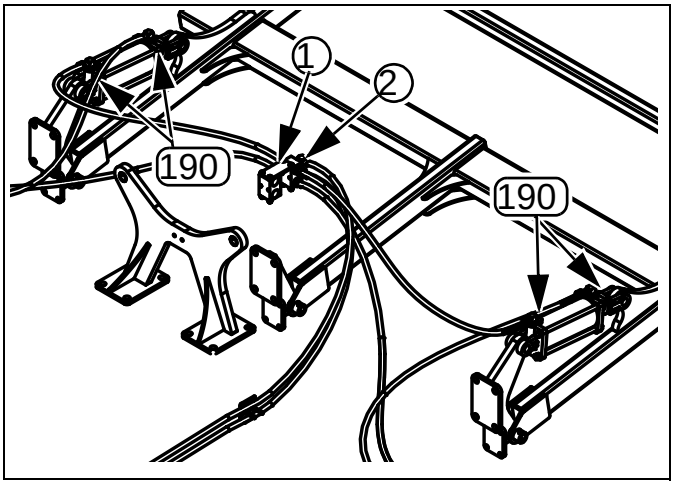

Figure 58 36626
Install Double Tee, 3000

SD3300:

Refer to Figure 59

802-172C (2) HHCS 5/16-18X2 1/2 GR5

804-009 (2) WASHER LOCK SPRING 5/16 PLT

811-063C (6) EL 3/4MJIC 3/4MORB

Mount the double tee block (560-536D) ② on cylinder fold weldment with the hardware. Install elbows in all ports.

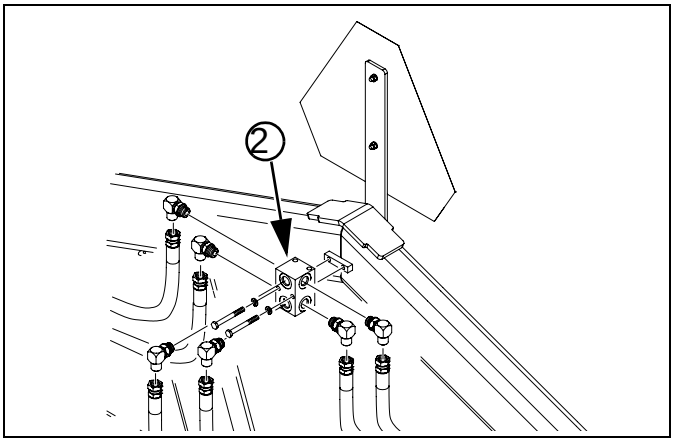

Figure 59 36855
Install Double Tee, 3300

4. Install Relief Valve

Refer to Figure 60

Install bracket (559-289D) ③ onto the valve assembly on the front brace bar tube. Replace the bolts holding the counterbalance valve on the bracket with two bolts (802-279C) and mount bracket (559-289D) onto the valve bracket (559-166D) ④. Mount the relief valve (810-960C) ⑤ to bracket using two each bolts (802-152C), lock washers (804-006C), and nuts (803-006C). Also 811-063C, 811-150C, 811-077C, and 811-088C.

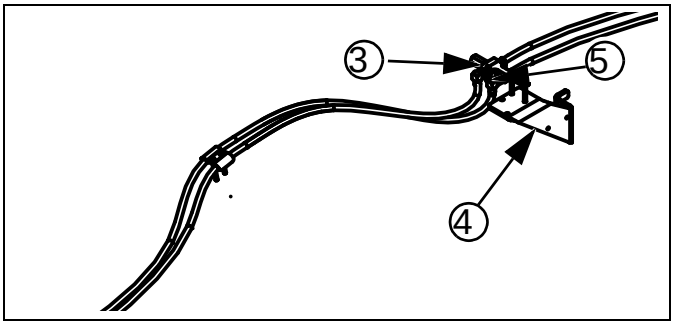

Figure 60 33626
Install Relief Valve

5. Route Hoses from Hitch to Relief Valve

Refer to Figure 66 on page 50

Route hoses starting from the hitch. These hoses (811-879C) are identical except for the blue hose handles, which have distinct symbols on each handle.

The retracted rod symbol is on the rod end of the retract hose. This hose routes to the elbow (811-150C) in the tee fitting (811-077C) installed at port 1 ⑥ of the relief valve (810-960C).

The extended rod symbol is on the base end of the extend hose. Route this hose to the elbow (811-063C) located in port 2 ⑦ of the relief valve (810-960C).

Route the hoses under the manual pack, through the rear hitch clamps, through the turnbuckle trunnion, through the front clamps, and through the hose loop. Insert the hose handles in the caddy holes.

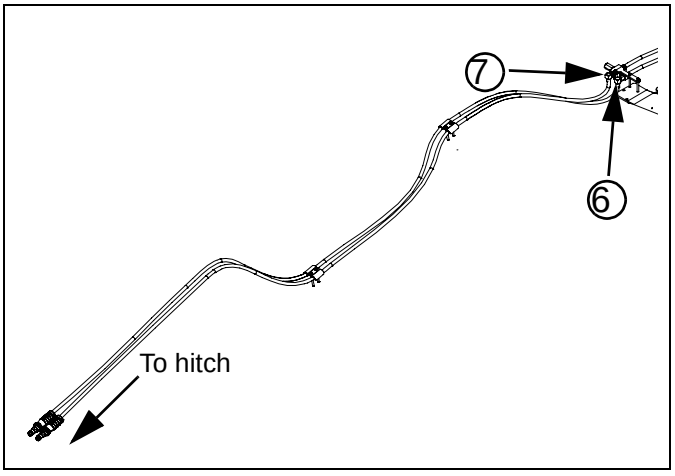

Figure 61 36626
Route from Hitch to Relief Valve

6. Route Cylinder Hoses from Relief Valve to Tee Block

Refer to Figure 66 on page 50

Route hoses from the relief valve to the rear of the tee block. The hoses (811-941C) are identical.

Route along center frame with the other hoses, lift and fold. Be sure the hoses are not in a pinch point with the weights.

The retract circuit side hose ⑧ routes from the tee fitting (811-077C) in port 1 of relief valve (810-960C), to the bottom elbow (811-063C) in tee block (560-536D).

The extend circuit side hose ⑨ routes from the straight fitting (811-088C) in port 2 of the relief valve (810-960C) and to the upper elbow (811-063C) in the tee block (560-536D).

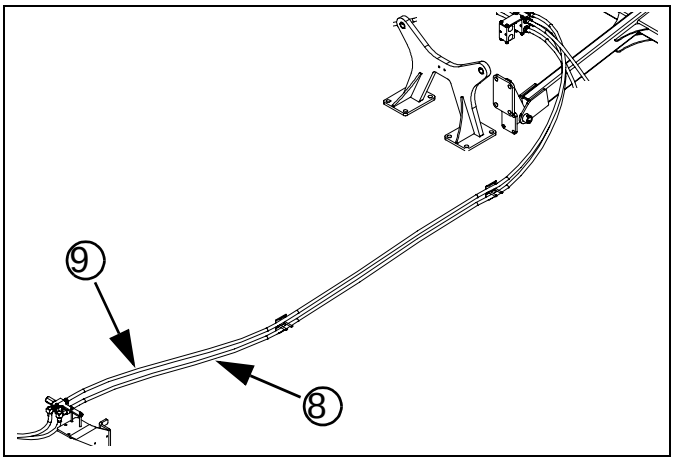

Figure 62 36626
Route from Relief Valve to Tee Block

7. Route Hoses from Tee Block to Master Cylinder

Refer to Figure 66 on page 50

Route hoses from the tee block (560-536D) to the master cylinders (850-040C) ⑩. The hoses (811-837C), are identical for the SD3000 on both the RH and LH sides. Route hoses from the upper tee block ports using adapters (811-088C) and to the elbow (811-063C) in the base end of master cylinder (850-040C) on the center roller frame. LH upper tee port goes to the LH cylinder. RH upper tee port goes to the RH cylinder.

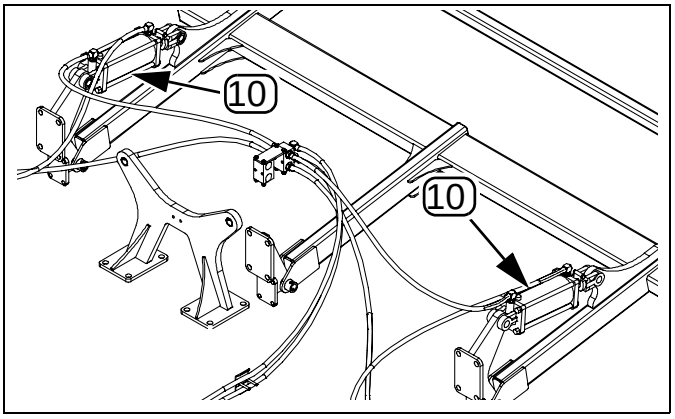

Figure 63 36626
Route from Tee Block to Master Cylinder

8. Route Hoses from Master Cylinders to Slave Cylinders

Refer to Figure 66 on page 50

Route hoses from the master cylinder (850-040C) ⑩ rod end to (850-041C) ⑪ base end. RH and LH side hoses are identical. The SD3000 uses hose (811-237C). Be sure that the 1/16 orifice plates (196-430D) are in the rod end of master cylinder (850-040C) before installing the elbow (811-063C). Route hose from elbow (811-063C) on rod end of (850-040C) through LH/RH center frame hose clamp, through rear hose clamp of wing and to elbow (811-063C) in the base end of the slave cylinder (850-041C) ⑪.

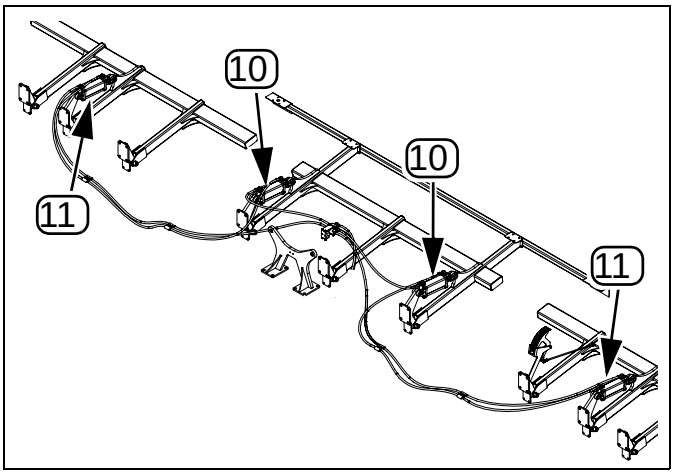

Figure 64 36626
Route from Master- to Slave Cylinders

9. Route Hoses from Slave Cylinder to Tee Block

Refer to Figure 66 on page 50

Route hose from the slave cylinder (850-041C) (12) rod end to bottom of tee block (13). The RH and LH sides use identical hoses (841-234C) on the SD3000. Be sure 1/16 orifice plates (196-430D) are in the rod end of the cylinder (850-041C) before installing 811-063C. Route hose from the elbow (811-063C) on rod end of the slave cylinder through the rear hose clamp of wing, through the rear outer center frame hose clamp and to the adapter (811-088C) on the bottom port of the tee block (560-536D) (13).

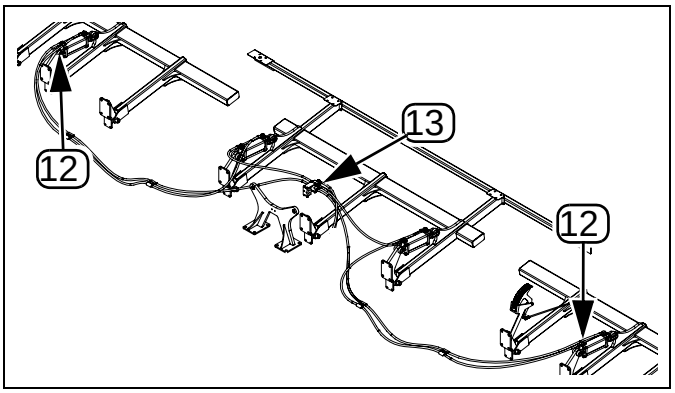

Figure 65 36626
Route from Slave Cylinder to Tee Block

10. Charge System

- The roller hydraulics are rephasing and may be charged without actual bleeding when retracted.
- Before charging the roller hydraulics, verify that each roller cylinder has a 1/16 inch orifice plate installed at each rod end.
- Clear all persons from the machine vicinity. The roller sections will raise during this operation.
- Connect the roller cylinders to a hydraulic source. Fully retract the roller cylinders. Hold circuit at full retract for two seconds after wing sections have fully retracted. Repeat this step several times to purge air from the lines.

Continue at “**Install Roller Gangs**” on page 51.

Cast Roller Hydraulic Routing: SD3000 (559-115A {shown}, 559-195A, & 559-225A)

Replacement Clamp Components		
55	802-010C	HHCS 5/16-18X1 1/4 GR5
58	802-138C	HHCS 5/16-18X2 1/4 GR5
62	802-390C	HHCS 5/16-18X3 1/4 GR5
100	804-009C	WASHER LOCK SPRING 5/16 PLT
190	811-063C	EL 3/4MJIC 3/4MORB
192	811-879C	HH3/8R2 179 3/4MORB 3/4FJIC

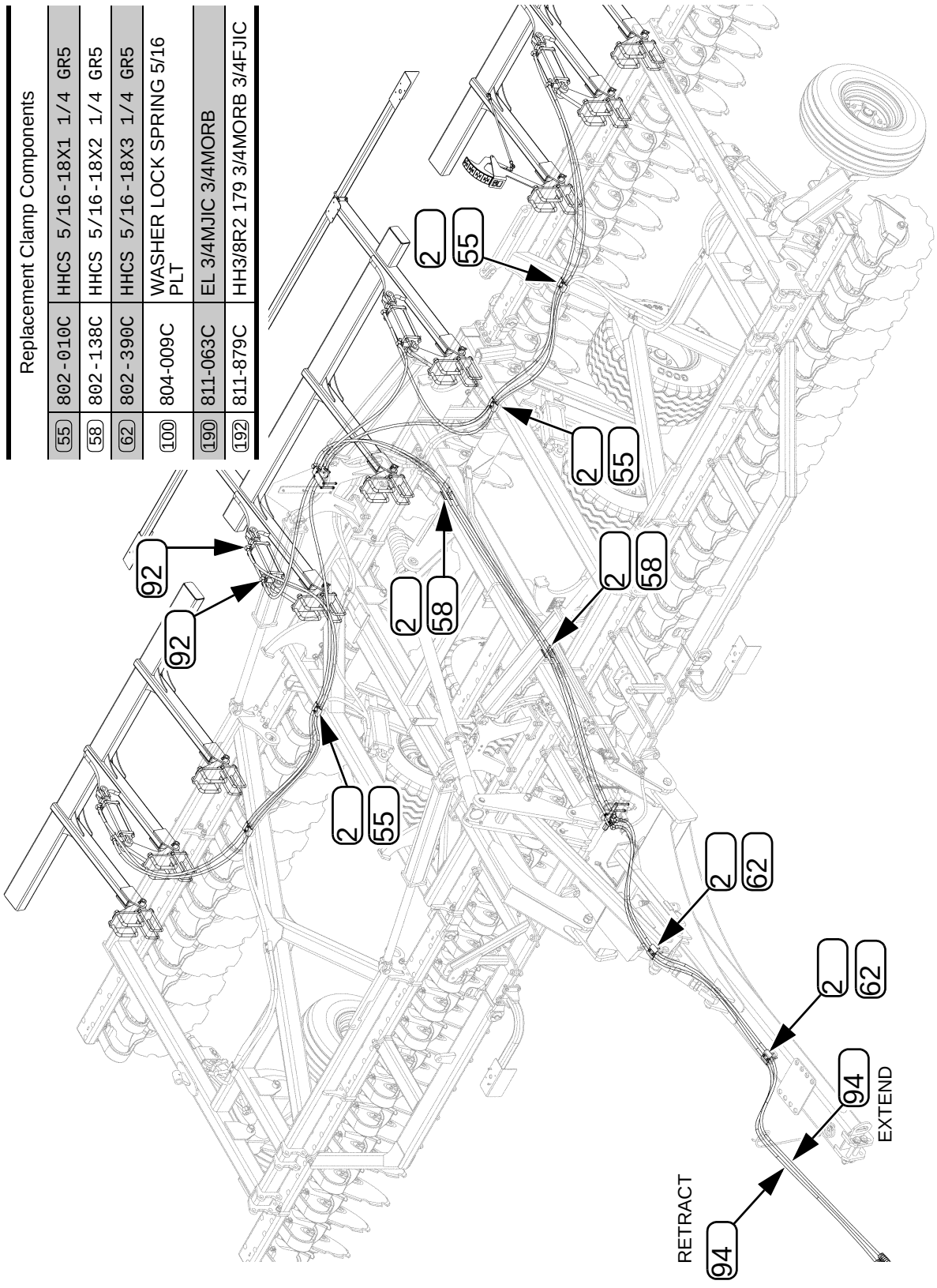

Figure 66
Cast Roller Hose Routing

Install Roller Gangs

Install Center Gang

Refer to Figure 67 (a Parts manual illustration)

1. Select one:
   (34) 559-191K GANG-16 ROLLER
   SD2600 AND SD3000
   (132)559-220K PACKING ROLLER CENTER-SD 33/36
   SD3300
2. Remove and save six sets:
   (64) 802-951C HHCS 5/8-11X7 GR8
   (79) 804-022C WASHER LOCK SPRING 5/8 PLT
   (69) 803-021C NUT HEX 5/8-11 PLT
   and three:
   (48) 586-186D GANG BRACKET MOUNT
3. Remove and save three sets
   (61) 802-360C HHCS 3/4-10X6 1/2 GR5
   (70) 803-026C NUT LOCK 3/4-10 PLT
   and two:
   (47) 586-182D GANG MOUNT BRACKET 5/8
4. Position the center gang, with spring loops forward, under the center pivot frame. Center the gang with machine center-line.
5. Set three of the six mount brackets (47), notched end forward, on the pivot frame rear tube. Add two $^{5}/_{8}$-11 bolts (64) at the forward holes, and one $^{3}/_{4}$-10 bolts (61) at each rear hole.
6. Insert the second set of mount brackets (47) under the frame tube and above the gang spring. Hold in position with the $^{3}/_{4}$-10 rear bolts (61) through the second bracket and the spring. Add a lock nut (70).
7. Place a bracket mount (48) under the spring at the forward $^{5}/_{8}$-11 bolts (64). Add lock washers (79) and nuts (69).
8. Verify that the gang is on machine center-line. Tighten all nuts ((69), (70)) to torque spec.

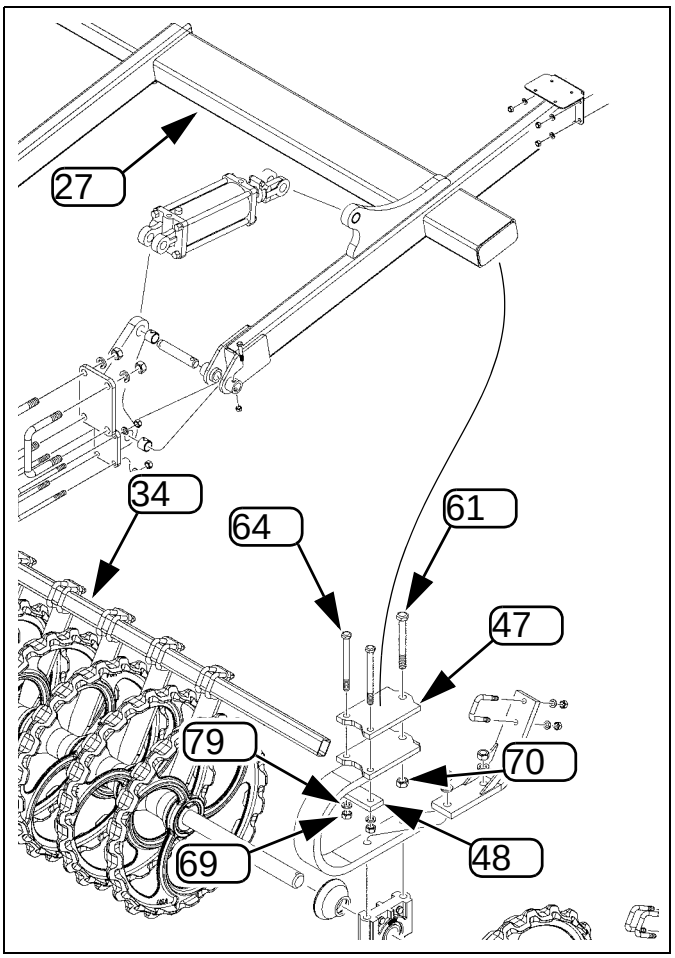

Figure 67
Center Roller Gang
36521

Install Wing Gangs

Start with the left wing.

Refer to Figure 67 (depicting the left wing)

1. Select one of:
   (30) 559-194K GANG 15 ROLLER-SD 26′ LH SD2600
   (31) 559-190K GANG 15 ROLLER - SD 26′ RH SD2600
   (30) 559-152K GANG-17 ROLLER LH SD3000 & SD3300
   (31) 559-153K GANG - 17 ROLLER RH SD3000 & SD3300
2. Remove and save six sets:
   (64) 802-951C HHCS 5/8-11X7 GR8
   (79) 804-022C WASHER LOCK SPRING 5/8 PLT
   (69) 803-021C NUT HEX 5/8-11 PLT
   and three:
   (48) 586-186D GANG BRACKET MOUNT
3. Remove and save three sets
   (61) 802-360C HHCS 3/4-10X6 1/2 GR5
   (70) 803-026C NUT LOCK 3/4-10 PLT
   and two:
   (47) 586-182D GANG MOUNT BRACKET 5/8
4. Position the wing gang, with spring loops forward, so that the inside rollers are spaced from the outside center rollers approximately as shown on page 53 (SD2600), page 54 (SD3000), or page 55 (SD3300).
5. Set three of the six mount brackets (47), notched end forward, on the pivot frame rear tube. Add two $^{5}/_{8}$-11 bolts (64) at the forward holes, and one $^{3}/_{4}$-10 bolts (61) at each rear hole.
6. Insert the second set of mount brackets (47) under the frame tube and above the gang spring. Hold in position with the $^{3}/_{4}$-10 rear bolts (61) through the second bracket and the spring. Add a lock nut (70).
7. Place a bracket mount (48) under the spring at the forward $^{5}/_{8}$-11 bolts (64). Add lock washers (79) and nuts (69).
8. Verify that the roller-to-roller spacing at the wing gap is as shown on page 53 (SD2600), page 54 (SD3000), or page 55 (SD3300). Tighten all nuts ((69), (70)) to torque spec.

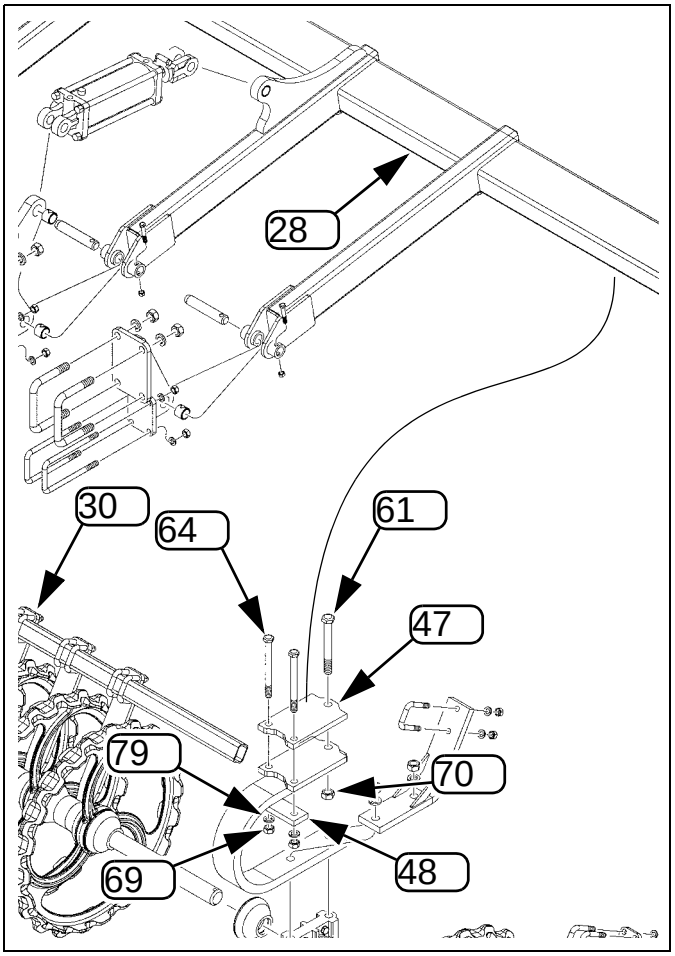

Figure 68
Center Roller Gang
36572

Continue at "**Install (Roller) Light Bracket**" on page 56.

Cast Roller Spacing Reference: SD2600 (559-195A)

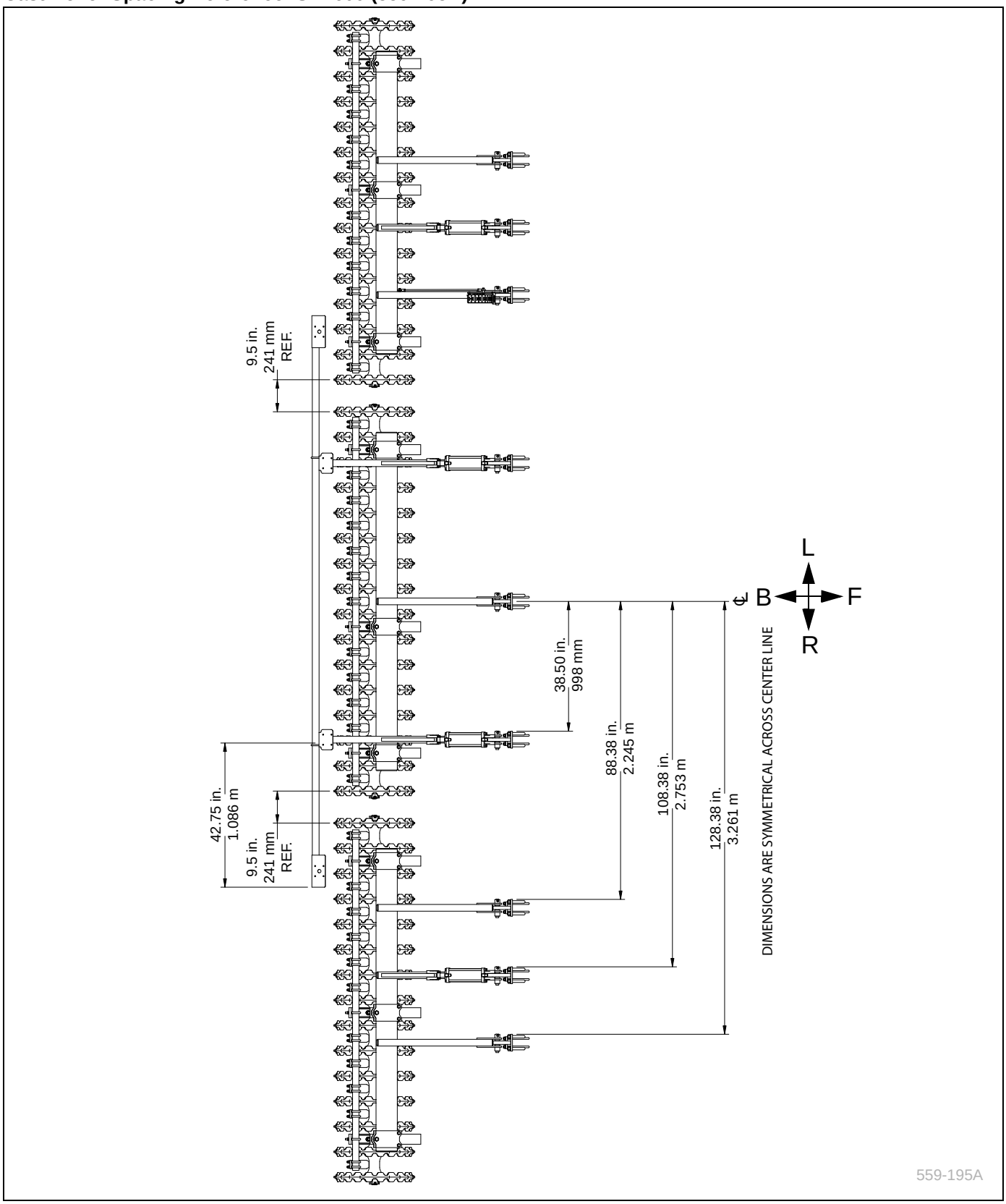

Cast Roller Spacing Reference: SD3000 (559-115A)

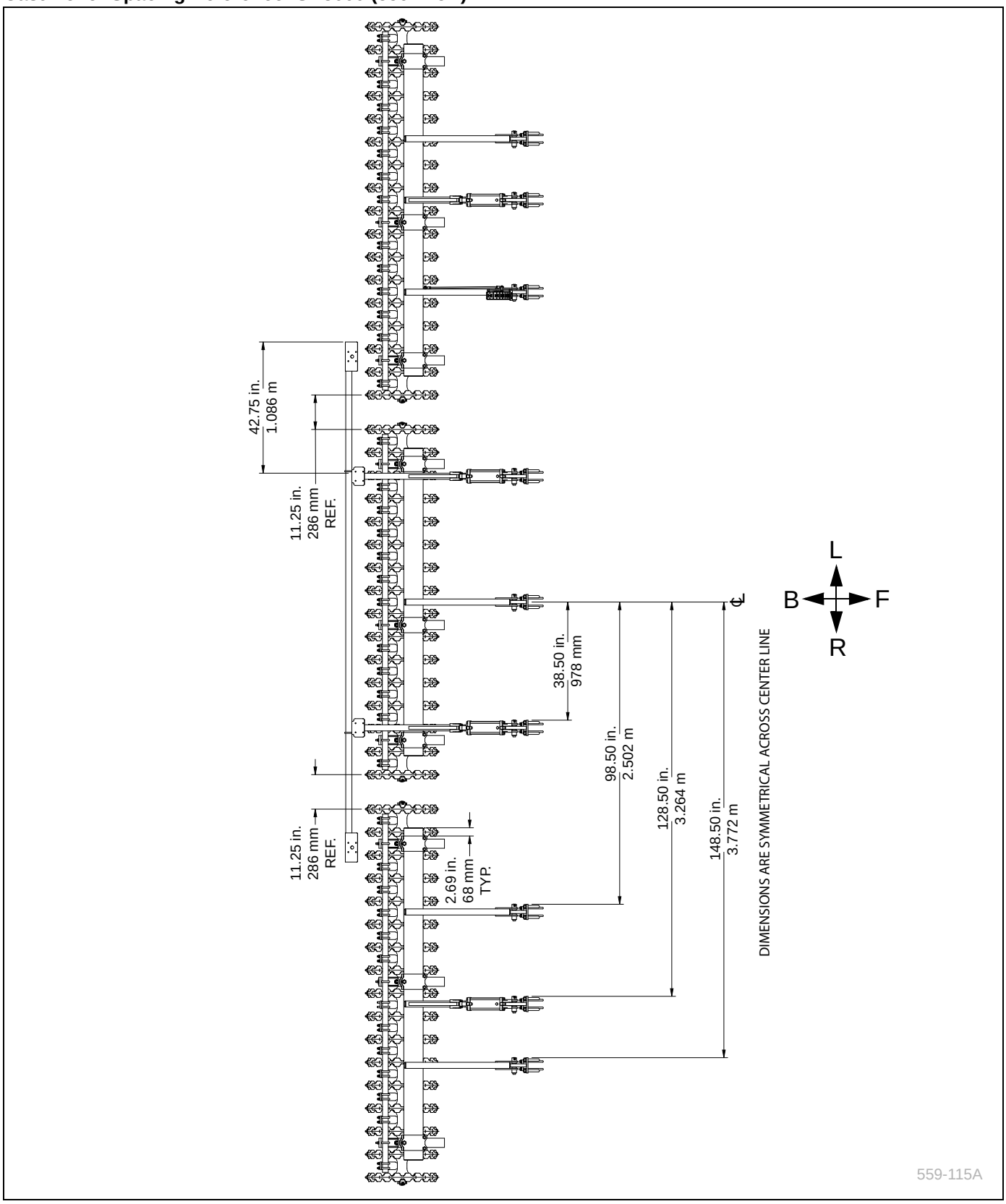

Cast Roller Spacing Reference: SD3300 (559-225A)

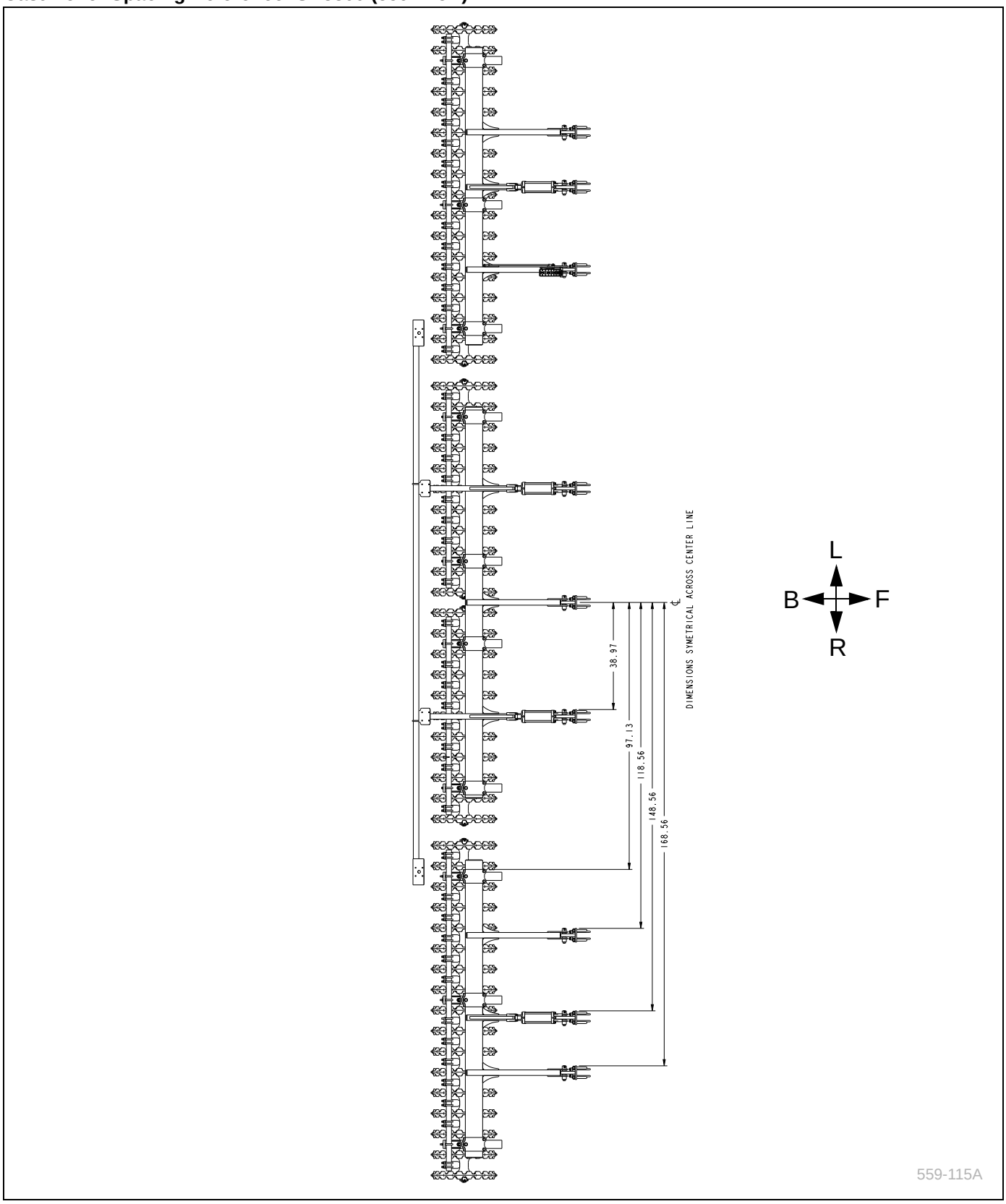

Install (Roller) Light Bracket

Refer to Figure 69 (a Parts manual illustration)

1. Select one:
   (22) 559-117H LIGHT BRACKET
   SD2600 & SD3000
   (22) 559-224H LIGHT BRACKET
   SD3300
   and four:
   (85) 806-166C U-BOLT 3/8-16 X 2 1/32 X 3
   and eight sets:
   (77) 804-013C WASHER LOCK SPRING 3/8 PLT
   (67) 803-014C NUT HEX 3/8-16 PLT
2. Orient the bracket (22) so the lamp mounts ① (with mounting holes) are facing up, and the break is facing down and to the rear.

   Loosely secure the bracket to the center roller frame with U-bolts (85), lock washers (77) and nuts (67).

   Verify that the light bracket is centered on the implement. Tighten the nuts.
3. Continue at “**Install Rear Lights**” on page 57.

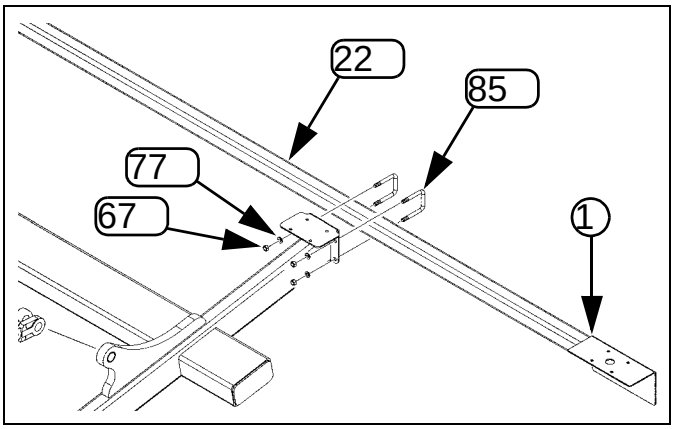

Figure 69
Roller Light Bracket
36521

Install Rear Lights

Start with the left side.

Install Amber LED Light

Refer to Figure 70

1. Route the 2-pin lighting harness lead ② (yellow: left, green: right) to the outer lamp mounting plate or bracket ⓐ. Route through any open tubes on the route, or under or in front of any frame members otherwise.
2. If not already installed on the plate or bracket, select one:
   ⑮ 833-697C LIGHT, AMBER LAMP LED
   and four sets:
   ㉘ 802-224C HHCS 1/4-20X1-1/4 GR5
   ㊷ 803-007C NUT LOCK 1/4-20 PLT
3. Orient light so 2-pin lead extends toward front of machine. Secure with bolts ㉘ and lock nuts ㊷. To avoid cracking the polymer lens base, do not exceed Grade 2 torque specification.
4. Route the lead through the hole in the bracket plate, if provided, otherwise in front of the plate. Connect to the harness lead.

Install Red LED Light

1. Route the 3-pin lighting harness lead ③ (yellow: left, green: right) to the inner lamp mounting plate or bracket ⓡ. Route through any open tubes on the route, or under or in front of any frame members otherwise.
2. If not already installed on the plate or bracket, select one:
   ⑭ 833-696C LIGHT, RED LAMP - LED
   and four sets:
   ㉘ 802-224C HHCS 1/4-20X1-1/4 GR5
   ㊷ 803-007C NUT LOCK 1/4-20 PLT
3. The red lens must face the rear. Secure with bolts ㉘ and lock nuts ㊷. To avoid cracking the polymer lens base, do not exceed Grade 2 torque specification.
4. Use cable ties to secure harnesses.
5. Repeat step 1 through step 4 for the right side.

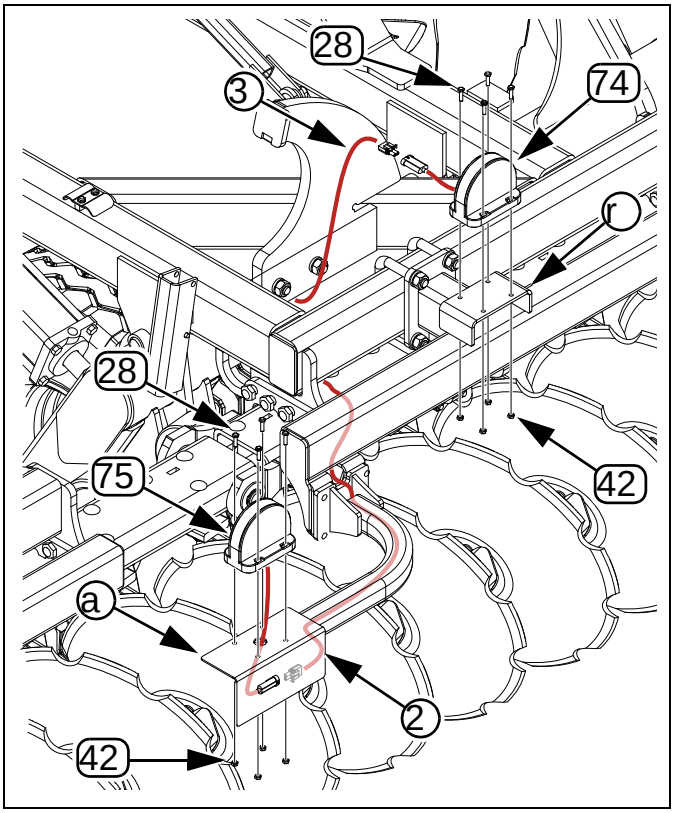

Figure 70 36609
Rear LED Lights

Close-Out

This completes mechanical implement assembly.

1. Tighten bolts, to Grade 2 torque spec, at all hose clamps.
2. Remove any wire-secured tags with part numbers.
3. Wipe grease pencil markings from frame.
4. Raise, fold and lock implement for transport. See Operator manual for steps.

Appendix A - Reference Information

Torque Values Chart

Bolt Size	Bolt Head Identification					
	Grade 2		Grade 5		Grade 8	
in-tpi[a]	N-m[b]	ft-lb[d]	N-m	ft-lb	N-m	ft-lb
1/4-20	7.4	5.6	11	8	16	12
1/4-28	8.5	6	13	10	18	14
5/16-18	15	11	24	17	33	25
5/16-24	17	13	26	19	37	27
3/8-16	27	20	42	31	59	44
3/8-24	31	22	47	35	67	49
7/16-14	43	32	67	49	95	70
7/16-20	49	36	75	55	105	78
1/2-13	66	49	105	76	145	105
1/2-20	75	55	115	85	165	120
9/16-12	95	70	150	110	210	155
9/16-18	105	79	165	120	235	170
5/8-11	130	97	205	150	285	210
5/8-18	150	110	230	170	325	240
3/4-10	235	170	360	265	510	375
3/4-16	260	190	405	295	570	420
7/8-9	225	165	585	430	820	605
7/8-14	250	185	640	475	905	670
1-8	340	250	875	645	1230	910
1-12	370	275	955	705	1350	995
1 1/8-7	480	355	1080	795	1750	1290
1 1/8-12	540	395	1210	890	1960	1440
1 1/4-7	680	500	1520	1120	2460	1820
1 1/4-12	750	555	1680	1240	2730	2010
1 3/8-6	890	655	1990	1470	3230	2380
1 3/8-12	1010	745	2270	1670	3680	2710
1 1/2-6	1180	870	2640	1950	4290	3160
1 1/2-12	1330	980	2970	2190	4820	3560

Bolt Size	Bolt Head Identification					
	5.8 Class 5.8		8.8 Class 8.8		10.9 Class 10.9	
mm x pitch[c]	N-m	ft-lb	N-m	ft-lb	N-m	ft-lb
M 5 X 0.8	4	3	6	5	9	7
M 6 X 1	7	5	11	8	15	11
M 8 X 1.25	17	12	26	19	36	27
M 8 X 1	18	13	28	21	39	29
M10 X 1.5	33	24	52	39	72	53
M10 X 0.75	39	29	61	45	85	62
M12 X 1.75	58	42	91	67	125	93
M12 X 1.5	60	44	95	70	130	97
M12 X 1	90	66	105	77	145	105
M14 X 2	92	68	145	105	200	150
M14 X 1.5	99	73	155	115	215	160
M16 X 2	145	105	225	165	315	230
M16 X 1.5	155	115	240	180	335	245
M18 X 2.5	195	145	310	230	405	300
M18 X 1.5	220	165	350	260	485	355
M20 X 2.5	280	205	440	325	610	450
M20 X 1.5	310	230	650	480	900	665
M24 X 3	480	355	760	560	1050	780
M24 X 2	525	390	830	610	1150	845
M30 X 3.5	960	705	1510	1120	2100	1550
M30 X 2	1060	785	1680	1240	2320	1710
M36 X 3.5	1730	1270	2650	1950	3660	2700
M36 X 2	1880	1380	2960	2190	4100	3220

a. in-tpi = nominal thread diameter in inches-threads per inch

b. N· m = newton-meters

c. mm x pitch = nominal thread diameter in mm x thread pitch

d. ft-lb = foot pounds

Torque tolerance + 0%, -15% of torquing values. Unless otherwise specified use torque values listed above. 25199

Tire Inflation

Tire Inflation Chart		
Location	Tire Size	Inflation
SD3000 Wing SD3300 Wing Gauge Wheel	12.5L x 15 12-Ply RI	52 psi (368 kPa)
SD3000 Center SD2600 Center SD2600 Wing	380/55 R 16.5	73 psi (503 kPa)
SD3300 Center	440/55 R18	73 psi (503 kPa)

Tire Warranty Information

All tires are warranted by the original manufacturer of the tire. Tire warranty information is found in the brochures included with your Operator's and Parts Manuals or online at the manufacturer's web sites listed below. For assistance or information, contact your nearest Authorized Farm Tire Retailer.

Manufacturer	Web site
Firestone	www.firestoneag.com
Gleason	www.gleasonwheel.com
Titan	www.titan-intl.com
Galaxy	www.atgtire.com
BKT	www.bkt-tire.com

Warranty

Great Plains (a division of Great Plains Manufacturing, Inc.) warrants to the original purchaser that this Great Plains unit will be free from defects in material and workmanship for a period of one year from the first use date when used as intended and under normal service and conditions for personal use; ninety days for custom/commercial or rental use. This Warranty is limited to the replacement of any defective part by Great Plains and the installation by the dealer of any such replacement part. Great Plains reserves the right to inspect any equipment or part which are claimed to have been defective in material or workmanship.

The following items and/or conditions are **not covered under warranty**: failures resulting from abuse or misuse of the equipment, failures occurring as a result of accidental damage or acts of God, failures resulting from alterations or modifications, failures caused by lack of normal maintenance as outlined in the operator's manual, repairs made by non-authorized personnel, items replaced or repaired due to normal wear (such as wear items and ground engaging components), repeat repair due to improper diagnosis or repair by the dealer, temporary repairs, service calls and/or mileage to and from customer location, overtime premium, or unit hauling expenses. The warranty may be voided if the unit is towed at speeds in excess of 20 miles per hour (32 kilometers per hour), or is used in soils with rocks, stumps, or other obstructions.

Great Plains reserves the right to make changes in materials or design of the product at any time without notice. The warranty shall not be interpreted to render Great Plains liable for damages of any kind, direct or consequential or contingent to property. Furthermore, Great Plains shall not be liable for damages resulting from any cause beyond its control. This warranty does not extend to crop loss, losses caused by planting or harvest delays or any expense or loss of labor, supplies, rental machinery, or for any other reason.

No other warranty of any kind whatsoever express or implied, is made with respect to this sale; and all implied warranties of merchantability and fitness for a particular purpose which exceed the obligations set forth in this written warranty are hereby disclaimed and excluded from this sale.

This warranty is not valid unless the unit is registered with Great Plains within 10 days from the date of the original purchase.

38112

Index

A
actuator rod 16
amber 31
attachment bar 36
B
base 19
bleed 22
brace bar 11, 25
C
cast roller 43
CAUTION, defined 1
center section 10
chain routing 58
charge 22
children 2
clamp 57
clearance, vertical 3
close-out 57
covered models 5
cylinder
  roller 45
D
DANGER, defined 1
definitions 5
depth control 14
depth stop 14
directions 5
down-pressure 13
E
electrocution 3
extend 19
F
fire 1
fold cylinder 26
fold hose 20
G
gap, proximity sensor 32
grease pencil 57
green 29, 30
H
harness 28, 29, 30
headphones 2
high pressure fluids 2
hose
  fold 20
  level link 21
  lift 20
hose function 19
hose routing
  tongue 19
H-weldment 15, 16, 17
hydraulic hose 10
hydraulic safety 2
I
implement 5
IN 20
inflation 59
intended usage 5
L
leaks 2
LED module 28
left-hand, defined 5
level bar 15
level link 16
level link hose 21
leveling tube 18
lift cylinder 26
lift hose 20
lifters 1
light 28, 31, 33, 56, 57
lights 2
location 9
lock valve 13
lug nut 35
M
maintenance safety 3
manual 6
medical assistance 2
models covered 5
N
Note, defined 5
NOTICE, defined 5
O
orientation rose 5
overhead lines 3
P
PDF 6
port
  IN 20
  T 20
  V1 20
  V2 20
protective equipment 2
proximity sensor 25, 32
R
retract 19
riders 2
right-hand, defined 5
rod 19
roller 43
rose, orientation 5
S
safety information 1
safety symbol 1
SD2600 ....3, 5, 39, 53
SD3000 ....3, 5, 40, 50, 54, 55
SD3300 41
sensor, proximity 25, 32
serial number 8
shipment 8
shipping plate 11
shipping stand 10, 24
Short Disk™ 5
shutdown 3
span 5
spirol pin 24
spriol pin 25
storage 3
symbol, safety 1
T
T 20
tables
  covered models 5
tag 57
tine 42
tire 35
tire inflation 59
tongue 18
tongue jack 18
torque 58
truss 12, 18
turnbuckle 35
U
unload 9
URLs, tires 59
V
valve
  depth control 14
  down-pressure 13
  wing lock 13
vertical clearance 3
V1 20
V2 20
W
WARNING, defined 1
warranty 59
weight kit 34
welding 3
wheel 35
wing stack 9, 23
Y
yellow 29, 30
Numerics
10,000 POUNDS 1
12.5Lx15 12-Ply RI 59
2-pin 28, 29
3-pin 28, 29
380/55 R 16.5 59
4-pin 28, 29

4500 kg 1
550-202S, assembly 14
556-231D, bracket 33
559-005V, valve 19
559-034S, bar 25
559-039H, truss 12
559-040H, truss 12
559-041S, link 18
559-042L, tongue 18
559-043H, bracket 15
559-046H, bar 15
559-068L, wheel asy 35
559-073L, wheel asy 35
559-078H, bar 11
559-080H, tube 14
559-081H, bar 36
559-084H, bar 37
559-086A, gauge wheels 35
559-087S, bar 25
559-088H, bar 37
559-089A, hydraulic level 19, 21, 22
559-089A, level 16
559-092H, link 17
559-105K, arm 38
559-106K, basket 42
559-111K, tine 42
559-112K, tine 42
559-113K, tine 42
559-114A, basket 38, 40
559-115A, roller 43, 54, 55
559-117D, pin 35
559-117H, bracket 56
559-118A, basket 41
559-119H, pivot 43
559-120H, pivot 43
559-123A, basket 38, 40, 42
559-129M, manual 5
559-129P, manual 5
559-129Q, manual 5
559-130H, pivot 43
559-132D, pin 24, 25
559-149H, pivot 44
559-150H, frame 44
559-151H, frame 44
559-152K, roller 52
559-153K, roller 52
559-158S, bar 25
559-159H, bar 37
559-160H, bar 37
559-162S, bar 25
559-166K, basket 42
559-167K, tine 42
559-168K, tine 42
559-169A, basket 38, 39
559-190K, roller 52
559-191K, roller 51
559-192H, frame 44
559-193H, frame 44
559-194K, roller 52
559-195A, roller 43, 53
559-198A, bar 36
559-199A, basket 38, 39
559-201H, bracket 33
559-202H, bracket 33
559-203A, bracket 33
559-204A, bar 36
559-207D, pin 16, 17
559-210H, bar 37
559-213A, bar 36
559-215K, tine 42
559-219A 38
559-219A, basket 41
559-225D, pin 27
559-287D, bracket 25
576-145D, bolt 18
586-182D, bracket 51, 52
586-186D, bracket 51, 52
589-047A, weights 34
589-444H, bracket 31, 36
589-445H, bracket 31, 36
599 ..... 38, 42
599-199A, basket 42
599-209H, bar 37
599-218A 38
599-218A, CRUMBLER 38
599-219A CRUMBLER 38
599-219A, basket 42
6-pin 28, 29
7-pin 29
800-085C, ring 27, 35
800-177C, ring 24, 25
80-082C bolt 15
802-005C, bolt 31, 57
802-010C, bolt 50
802-034C, bolt 31, 36
802-058C, bolt 14
802-096C, bolt 12
802-115C, bolt 14
802-128C, bolt 16, 17
802-138C, bolt 50
802-192C, bolt 42
802-221C, bolt 19
802-337C, bolt 15, 17
802-360C, bolt 51, 52
802-382C, bolt 27
802-390C, bolt 50
802-483C, bolt 18
802-623C, bolt 44
802-841C, bolt 11, 23
802-903C, bolt 18
802-947C, bolt 11, 12, 25
802-951C, bolt 51, 52
803-007C, nut 31, 57
803-008C, nut 13
803-014C, nut 56
803-020C, nut 16, 17, 31, 33, 36, 37, 43
803-021C, nut 42, 51, 52
803-024C, nut 14
803-026C, nut 51, 52
803-027C, nut 11, 12, 23, 25, 36, 37, 38
803-027C, washer 43
803-031C, nut 12, 13
803-032C, nut 35
803-123C, nut 18, 27, 44
803-219C, nut 35
803-314C, nut 18
803-367C, nut 42
804-006C, washer 19
804-009C, washer 13, 14
804-013C, washer 13, 56
804-015C, washer 16, 17, 31, 33, 36, 37, ... 43
804-022C, washer 42, 51, 52
804-023C, washer 11, 12, 23, 25, 36, 37, ... 38, 43
804-027C, washer 12
804-039C, washer 18
804-165C, washer 24
804-192C, washer 15, 26, 27, 35
805-004C, pin 15
805-058C, pin 15, 26
805-292C, pin 44
805-396C, pin 26
805-404C, pin 27
805-420C, pin 18
806-136C, U-bolt 13
806-159C, U-bolt 33
806-166C, U-bolt 56
806-183C, U-bolt 42
806-202C, U-bolt 13, 33, 36, 37, 43
806-203C, U-bolt 36, 37, 38, 43
810-849C, valve 13, 29
811-063C, elbow 45
811-962C, hose 21
814-538C, tire 35
833-623C, sensor 29, 32
833-694C, harness 29
833-696C, lamp 29, 57
833-697C, lamp 31
833-697C. lamp 57
833-701C, harness 28, 29
833-702C, harness 28, 29
841-198C, hose 20
841-838C, hose 20
850-040C, cylinder 45
850-041C, cylinder 45
891-327C, harness 28

Great Plains

"Harvest Starts Here."

Great Plains, Mfg.
1525 E. North St.
P.O. Box 5060
Salina, KS 67402