FIELD ADJUSTMENTS

ULTRA-TILL

UT3030, UT5036,
UT5042, UT5052

ULTRA-TILL MAINTENANCE

Proper servicing and maintenance is the key to the long life of all farm equipment. With careful and systematic inspection of your Ultra-till, you can avoid costly maintenance downtime and repair.

General Maintenance

1.) Always install all transport locks when working or doing maintenance on the Ultra-till. If folded, be sure your wing stop pins are in place. Read and understand all safety decals on your equipment.

2). Refer to the operators manual for proper lubrication intervals and maintenance schedules.

a.) Inspect wheel bearings occasionally for proper adjustment. Re-pack as outlined in the operator's manual.

b.) Grease disc gang bearings, rolling harrow bearings, and wheel bearings sparingly. Over-greasing may cause damage to seals and reduce the life of the bearing. Grease hinge points periodically:

Disc Gang Bearings	Grease every 50 hours
Wheel Bearings	Grease every 50 hours and check for endplay
All Hinge Points	Grease every 10 hours
Walk Beam Pivot Bearings	Grease every 100 hours and check for endplay
Phoenix Rotary Modules	Grease every 10 hours
Great Plains Rolling Spike	Grease every 50 hours

By following and maintaining a routine service and lubrication program, your tillage equipment will give you many years of service.

3) Inspect all tires for proper inflation

395/55B 16.5 Skid Steer	60 P.S.I.
12.5L X 15 F-Ply	90 P.S.I.
11L X 15 8-Ply	36 P.S.I.
6.70 X 15 4-Ply	32 P.S.I.
7.50 X 10 10-Ply	80 P.S.I.

4.) During the first season of operation, and periodically after that, check all bolts for tightness.

5.) Check scrapers and make sure gang turns freely.

6.) Check and tighten any hydraulic leaks. Check hoses for any leaks. It is important that there are no leaks on the equipment that may change the depth when in field position. If machine is stored outdoors over the winter months it is a good idea to fold the machine, then set it down on the ground so all the cylinders are retracted to protect the cylinder rods. This will extend the life of the cylinder seals, and reduce internal and external leaks that cause future problems maintaining a level machine.

ADJUSTMENTS BEFORE GOING TO THE FIELD

General Information

1.) Make sure your tractor horsepower matches the implement you are pulling. This is important so the implement can do the best possible job. (Minimum of 7-8 Hp per Ft.)

2.) Hitch the tractor to the Ultra-till. This tool is equipped with a reversible single tang hitch. Use the correct size hitch pin to insure proper performance and to minimize wear.

3.) Check safety chain to insure that it is properly attached. Make sure all warning lights are hooked up and functioning correctly.

4.) Clean all hydraulic couplings and connect to tractor. Each hydraulic coupling has a colored coded handle on it, and is marked with a cylinder, either extending or retracting.
   a). Red – Disc Gangs
   b). Green – Fold / Hydraulic Down Pressure
   c). Black - Main Lift

Unfolding Instructions:

1.) If machine is folded:
   a). Remove the transport pins from the wing stops. (Do not remove pins if the wing is leaning against the pins, or putting pressure on the pins. Use the hydraulics to pull the wings in completely before unpinning them.)
   b). Once the pins are removed, slowly unfold the unit. Make sure no one is under the wings during the unfolding process.
   c). Check again for hydraulic leaks and watch that hoses do not get pinched in hinges, wings, stops, etc.
   d). Put the transport locks in place, and re-fold the machine slowly. Put wing stop pins in place. You are now ready to go to the field. (It is very important not to run the machine down the road without the transport locks in place.)
   e). After the machine is completely unfolded, raise and lower the Ultra-till several times to purge air from the hydraulic system. Again check for hydraulic leaks, and tighten or replace if necessary.

Leveling the unit

1). You can adjust the side-to-side levelness of the unit best before you install the modules.
   a). Lower the machine until the cylinders are completely retracted and measure down from the bottom of the center frame to the ground. (Take note of this measurement.)
   b). Repeat this process at each section to pre-level the machine adjusting the eyebolt on each cylinder.

2.) Front to rear leveling should be done in the field with the modules installed. This is adjusted with the turnbuckle on the hitch.

FIELD ADJUSTMENTS
& GENERAL OPERATING INSTRUCTIONS

1. The Ultra-till is designed as a secondary vertical tillage tool and is designed to leave a finished seedbed following some form of fall or spring tillage. In a min-till/no till operation, it may be used as a one-pass vertical tillage tool in the spring. For best results, if at all possible, run the machine at a slight angle to the rows. This will improve trash flow and help spread the residue more evenly throughout the field.

2. The ideal working speed for turbo blades is 7 to 10 MPH. If the Ultra-till is equipped with disc-blades, then no more than 7 MPH is recommended due to the possibility of ridging.

3. Before starting in the field: Set the depth of the gangs at 0 inches on the gauge. Let the machine all the way down until the cylinders are retracted. Set your leveling front to back with the turnbuckle on the hitch by lengthening or shortening. Re-set the depth of gangs between 2 to 3 on the gauge.

4. Next set the hydraulic down pressure using the instructions provided.(next pages)

5. If possible, have someone observe the machine during first time operation for levelness – front to rear and wings to center frame. Adjust each as needed. If ground is soft, and the blades are running too deep, raise the gangs to desired depth. You may need to readjust front to back. If the ground is hard this may raise the front and again the front to back may need to be changed (Note: To change front to rear, either extend to raise the front, or shorten the turnbuckle to lower front.) On 5-section Ultra-tills with the hydraulic gauge wheels, set the wheels in field position to be 1” to 2” off the ground.

6. For a final adjustment on the hydraulic down pressure, note the action of the gang bolts as the machine operates through the field by watching the nuts at the top of the bolts (as shown by arrow). If the center gang bolts are more active than the wings, the pressure to the wings may need to be increased. If the wing gang bolts are cycling extensively but the center is not, the pressure to the wings needs to be decreased. On a five-section machine, you need to set the outside wings with one valve and the inside wings with the other (the valves are marked as to which is which). Once you have all the spring bolts across the machine working evenly, lock the valves in place. You may need to re-adjust these valves as field conditions change, (i.e. ground becomes harder as it dries out or wetter after a rain).

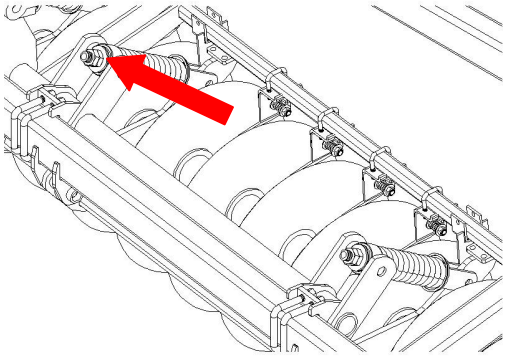

7. If a basket is added for leveling, use the eyebolt to increase or decrease down pressure. (Note: Shorten for less pressure or lengthen for more.)