FIELD ADJUSTMENTS

YIELD-PRO PLANTER

4010HDP, 4020P, 4025
3010HDP, 3020P, 3025

ADJUSTMENTS BEFORE GOING TO THE FIELD

General Maintenance:

1). Refer to the operator's manual for proper lubrication intervals and maintenance schedules.

2). Inspect the tire pressure of all tires.

Tire Pressure		
Size	**Location**	**Pressure**
395/55B 16.5	Transport	60 PSI

3). Inspect all drive chains for tension and free movement. Improperly adjusted or stiff chains can climb or bind on the drive sprockets and cause erratic seed spacing.

General Information:

1). Make sure all 3-point hitch latches are properly fastened and that all safety lighting is properly installed and functioning correctly.

2). Hook up hydraulic hoses as follows:

Hydraulic Hookup				
Outlet	**Color**	**System**	**Flow (gal./min.)**	**Timer**
1	Blue	Lift	12	Full lift less ½ sec.
2	White	Marker / Fold / Aux.	6	Full Cycle
3	Orange	Fan	Adjust for 3500 RPM	Continuous
Motor Return		Fan – Motor Return	Continuous 0-15 GPM	N/A
Case Drain		Fan – Motor Case Drain	Continuous 0-3 GPM	N/A
4	Yellow	Hydraulic Drive	12 Gal.	Continuous

Initial Planter Leveling:

1). Unfold the planter and pull forward so front gauge wheels are in planting position.

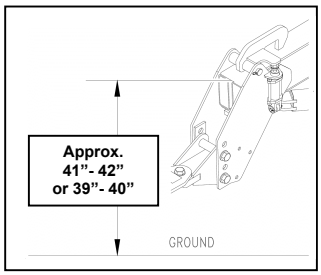

2). Lower the tractor's 3-Point or hydraulic hitch so the top of the tongue is between:

41 to 42" for 25 Series
41 to 42" for 10HD Series
39 to 40" for 20 Series

NOTE: This is only a starting point and must be fine tuned to achieve the final toolbar height.

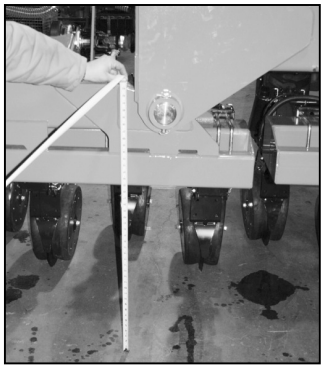

3). Lower the planter frame to the ground. Measure between the ground and the center of the planter frame. The frame height at the pivots should be:

26" for 25 Series
26" for 10HD Series
24" for 20 Series

NOTE: This height should only be checked at the pivots.

4). Measure the toolbars at the end of the wings. The frame height should be:

26" for 25 Series
26" for 10HD Series
24" for 20 Series

Adjust the eyebolts if necessary.

Note: Eye-bolt adjustments are easier if the planter is first lowered to the ground to remove some of the force on the cylinder.

5). If these adjustments are made on a hard surface, the opener parallel arms will be above parallel. When toolbar height is correct and the planter is in the field in planting conditions, the front pivot (A) of the parallel arms should be no more than 1inch higher than the rear pivot (B).

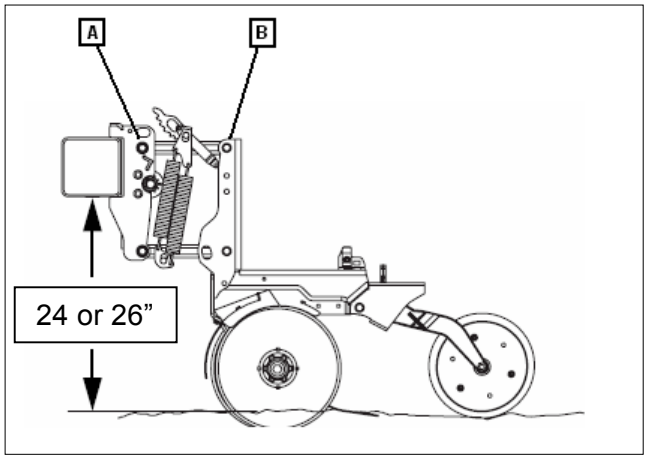

Yield-Pro 30' & 40' Field Adjustments - *continued*

6). At this point the planter should be level front-to-rear and side-to-side. With the planter unfolded and lowered in the field position, place a block ahead of the wing gauge wheels and pull ahead slightly to tension the pull bars. The ends of the toolbar should be 0" to ¼" forward of the center.

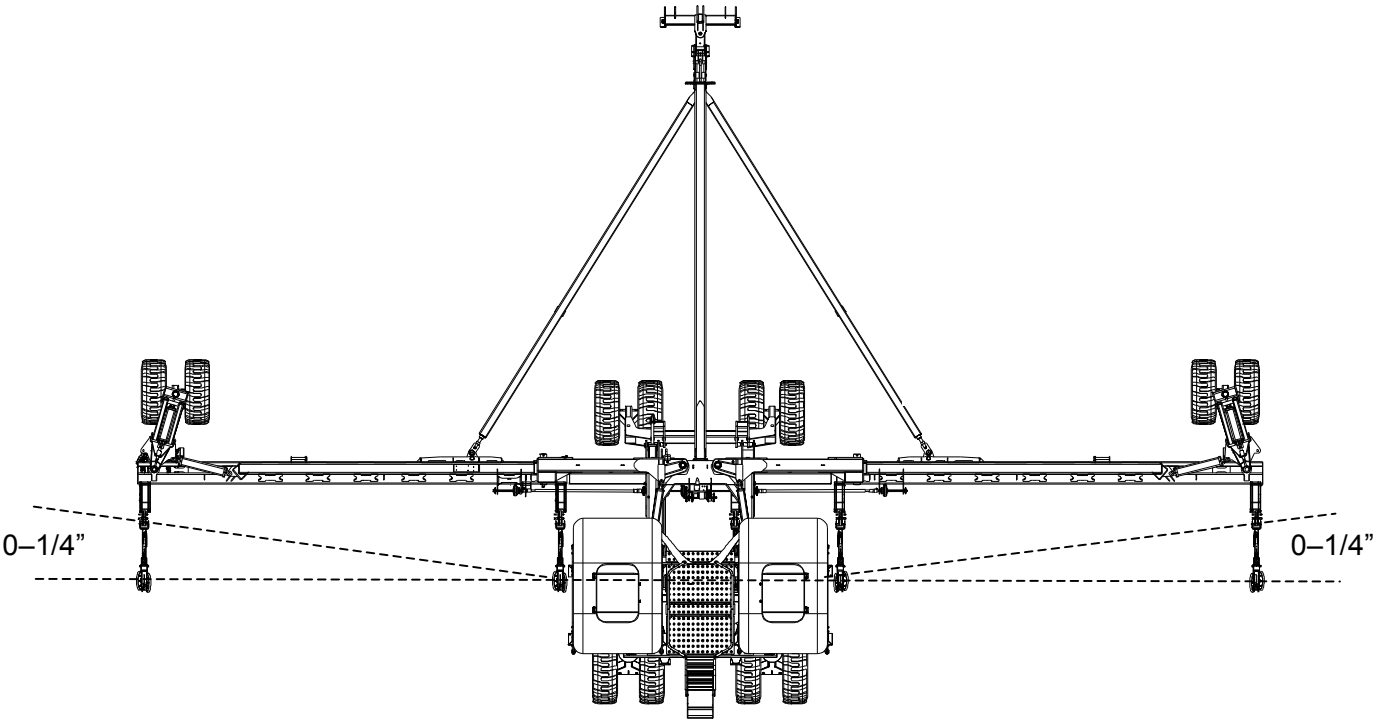

<u>25 Series Initial Planter Settings:</u>

1). Adjust the unit mount coulters ¼" above (shallower) than the opener discs.

2). Adjust the row cleaners as outlined in the operator's manual.

3). Adjust the opener down pressure to the correct initial setting. (A wrench is provided to make this adjustment and is stored under the walk board, or an 1⅛" wrench can also be used.)

   a). Standard planter with no unit mount attachments planting into conventional tillage: 1st notch – lightest setting.

   b). Standard planter with row cleaners in conventional to minimum tillage: 2nd notch from lightest setting.

   c). Standard planter equipped with a unit mount coulter planting in no-till conditions: 2nd notch from lightest setting.

   d). Planter with frame mounted coulters or row cleaners in conventional to minimum tillage. 1st notch – lightest setting.

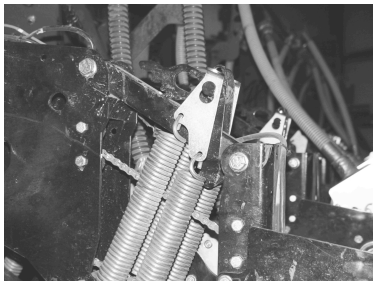

Yield-Pro 30' & 40' Field Adjustments - *continued*

4). Set the opener depth so that 7 holes are showing above the T-handles – this is approximately 1 ¾" of seed depth.

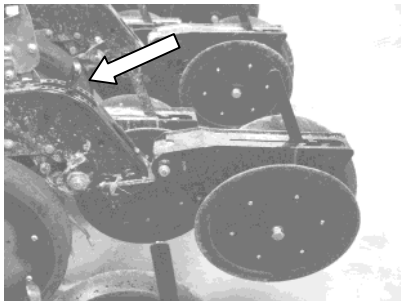

5). Raise the side depth arm. If adjusted correctly, it should touch the disc blade between 5 and 7 o'clock position, but drop fully when released. (Proper adjustment instructions are outlined in the operator's manual.)

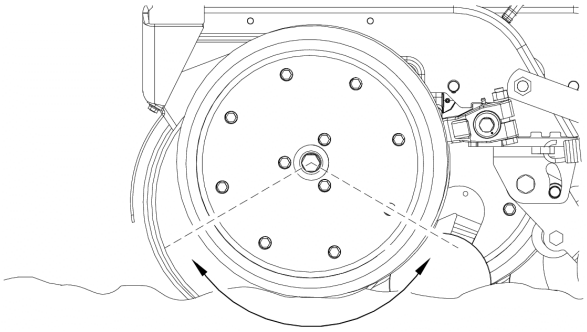

25 Series

6). Place the closing wheel pressure handle in the lightest setting, the first position from front.

7). If you have a twin row planter and you wish to time the meters so all plants are staggered, this can be accomplished by setting the meter drive sprockets to match the chart found in the "seed rate charts" book or the Operators Manual.

NOTE: These are initial settings and may be adjusted as needed.

CAUTION: Always start at the <u>lowest possible opener down pressure spring setting</u>. This is important because as the pressure is increased, it can have a negative impact on the overall flexibility of the planter. Do not use any setting that appears to raise the toolbar.

Yield-Pro 30' & 40' Field Adjustments - *continued*

20 Series Initial Planter Settings:

1). Adjust the opener down pressure to the correct initial setting. (A wrench is provided to make this adjustment and is stored under the walk board, or an 1⅛" wrench can also be used.)
   a). Standard planter with no unit mount attachments planting into conventional tillage: 1st notch – lightest setting.
   b). Standard planter with row cleaners in conventional to minimum tillage: 2nd notch from lightest setting.
   c). Standard planter equipped with a unit mount coulter planting in no-till conditions: 2nd notch from lightest setting.
   d). Planter with frame mounted coulters or row cleaners in conventional to minimum tillage. 1st notch – lightest setting.

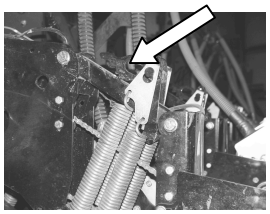

4). Set the opener depth so that 3 holes are showing below the T-handles – this is a good starting point.

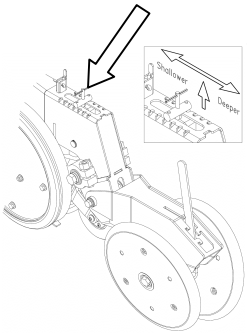

20 Series

5). Raise the side depth arm. If adjusted correctly, it should touch the disc blade between 5 and 7 o'clock position, but drop fully when released. (Proper adjustment instructions are outlined in the operator's manual.)

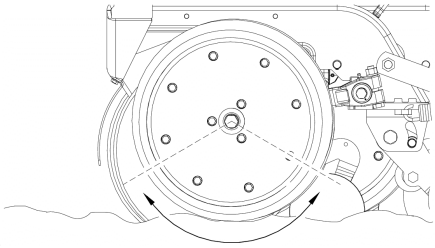

6). Place the closing wheel pressure handle in the lightest setting, the first position from front.

NOTE: These are initial settings and may be adjusted as needed.

CAUTION: Always start at the <u>lowest possible opener down pressure spring setting</u>.

This is important because as the pressure is increased, it can have a negative impact on the overall flexibility of the planter. Do not use any setting that appears to raise the toolbar.

Yield-Pro 30', & 40' Field Adjustments - *continued*

10HD Series Initial Planter Settings:

1). Adjust the opener down pressure to the correct initial setting. (A wrench is provided to make this adjustment and is stored under the walk board, or an 1⅛" wrench can also be used.)

a). Standard planter with no unit mount attachments planting into conventional tillage: 1st notch – lightest setting.

b). Standard planter with row cleaners in conventional to minimum tillage: 2nd notch from lightest setting.

c). Standard planter equipped with a unit mount coulter planting in no-till conditions: 2nd notch from lightest setting.

d). Planter with frame mounted coulters or row cleaners in conventional to minimum tillage. 1st notch – lightest setting.

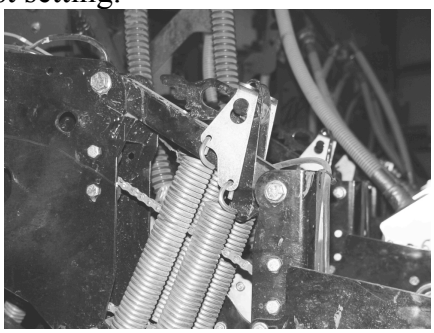

2). To start, all of the opener T-handles should be set in the same holes (mid range). Check for the actual depth of seed. Adjust for wheel tracks as necessary. The openers in the wheel tracks may need to be one hole deeper because of soil compaction.

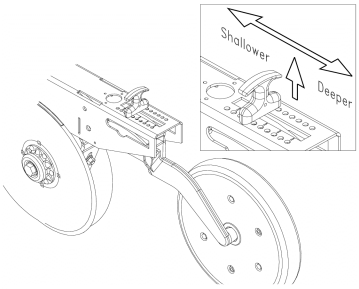

10HD Series

3). If you have a twin row planter and you wish to time the meters so all plants are staggered, this can be accomplished by setting the meter drive sprockets to match the chart found in the "seed rate charts" book or the Operators Manual.

NOTE: These are initial settings and may be adjusted as needed.

CAUTION: Always start at the <u>lowest possible opener down pressure spring setting</u>. This is important because as the pressure is increased, it can have a negative impact on the overall flexibility of the planter. Do not use any setting that appears to raise the toolbar.

Yield-Pro 30', & 40' Field Adjustments - *continued*

Initial Metering System Setting:

1). Fan starting range: 3500 R.P.M.

2). Finger pick-up brush setting: Refer to the corn size chart in operator's manual or on the meter decal for the proper adjustment. 1 (loose) large flats; 5 (tight) popcorn.

3). Singulator Plus meter: Refer to the seed size chart and install the correct meter wheel.

4). Setting the seed rate:
a.) Refer to the Dickey-john IntelliAg Manual

5). Refer to the Seed Rate Chart Book and select the correct fertilizer rate.

6). Place an orifice in each wet boom manifold opening that is being used. The acceptable manifold operating pressure range is 15 to 60 P.S.I. The preferred manifold operating pressure range is
15 to 40 P.S.I. This range of pressures insures even fertilizer distribution, with out causing fertilizer splash. Orifice size affects manifold pressure, but will not affect gallons per acre!

NOTE: Increasing or decreasing the number of rows used will affect the manifold pressure.

7). Set the marker length. Measure the distance from the end of the inner marker adjustment tube to the end of the outer adjustment tube.

Marker Length	
15" rows	10 ½"
20" rows	25 ½"
30" and twin	25 ½"

NOTE: If a twin row planter is used on 30" single row spacing, the right and left markers will be different lengths. Follow the procedure outlined in the Operators Manual to properly set the markers.

Seed Monitor

Your Yield-Pro planter is equipped with a Dickey-john IntelliAg Monitor. Dickey-john has provided an Operators Manual for the monitor. Great Plains has set up the IntelliAg monitor at the factory, however, we would suggest you use the "Quick Start Guide" to check that the factory set up parameters meet your needs.

FIELD ADJUSTMENTS & GENERAL OPERATING INSTRUCTIONS

1). Unfold the planter as outlined in the operator's manual.

2). Fill the seed ½ full.

3). If some of the openers are to be locked-up in the storage position, do so now.
NOTE: Front rows only.

4). Turn off the air flow to the unused meters.
(Do Not remove the meters, but Do disengage the clutch.)

5). Turn off the fertilizer to the unused rows.
(Remember to re-check the manifold pressure, as it will change.)

6). Lower the planter and 3-point hitch or hydraulic hitch to the field position.

7). Tie up one row of closing wheels to inspect the actual depth of the seed.

8). Pull ahead at field speed to inspect:
   a). The levelness of the toolbars (side-to-side).
   b). Levelness of the parallel opener links.
   c). Depth of seed.
   d). Spacing of seed.

e). Side to side alignment of all of the closing wheels.

Yield-Pro 30', & 40' Field Adjustments - *continued*

f). Closing wheel spacing:
- They can be adjusted in or out by moving the spacers.
- If plugging between the closing wheels occurs, the closing wheels can also be staggered.

g). Closing wheel pressure

h). Starter fertilizer manifold P.S.I. (Must be over 15 psi and less than 60 psi.)

i). Seed distribution to the meters.

j). Measure the length of the marker and adjust if needed.
-The angle of the marker can be increased to make the marker more aggressive.
-Always pull the dirt in toward the planter, never push the dirt away.

k). Inspect monitor pre-sets to insure that the monitor is set correctly.

l). Inspect drive settings to insure that the drive is adjusted correctly.

SEED AND THE USE OF INOCULANTS AND TREATMENTS

Precision Planting Finger-Pickup Meters:

1). Use only approved graphite powder available from Great Plains (EZ-Slide) 821-042C to ensure proper lubrication of finger-pickup meters.

2). Recommended usage:
   a). For finger-pickup meters, add one tablespoon of graphite for each unit of seed corn (80,000 kernels).
   b). In high humidity conditions or if you are using seed box seed treatments, or seed corn treated with any insecticides or polymers (Poncho, Prescribe, Cruiser, etc.), add one tablespoon of graphite for each unit of seed corn (80,000 kernels).

Note: If delivery of seed from the hopper to the finger meter is an issue, add Ezee Glide Plus at a rate of 1 cup per 4 units (320,000 kernels) or adjust amount until delivery issues are solved.

Great Plains Singulator plus Precision Meters:

1). Talc/Graphite lubricant is mandatory for all seeds, especially treated or inoculated seed. Recommended usage:
   a). For clean seeds, sprinkle one cup of Great Plains Ezee Glide Plus per 4 bushels of seed.
   b). Adjust this rate as necessary so all seeds become coated while avoiding an accumulation of lubricant in the bottom of the hopper.

2). For Milo Planting Only: Mix 1 cup of Ezee Glide Plus per 2 units/bushels of seed. Adjust this rate as necessary so all seeds become coated while avoiding an accumulation of lubricant in the bottom of the seed hopper.
   Great Plains Ezee Glide Plus #: 5 Gallon 821-069C
   Great Plains Graphite #: 1 Pound 821-042C, (5 pound 821-060C)

NOTE: For the first use, it is advisable to thoroughly mix approximately 5 gallons or a unit of seed with a high rate (2-3x) of the appropriate lubricant (Graphite for corn; Ezee Glide Plus for beans) and place in the air box prior to loading the hopper or probox.