From Serial No. 18007975

X-PRESS

P15845 02/04/09

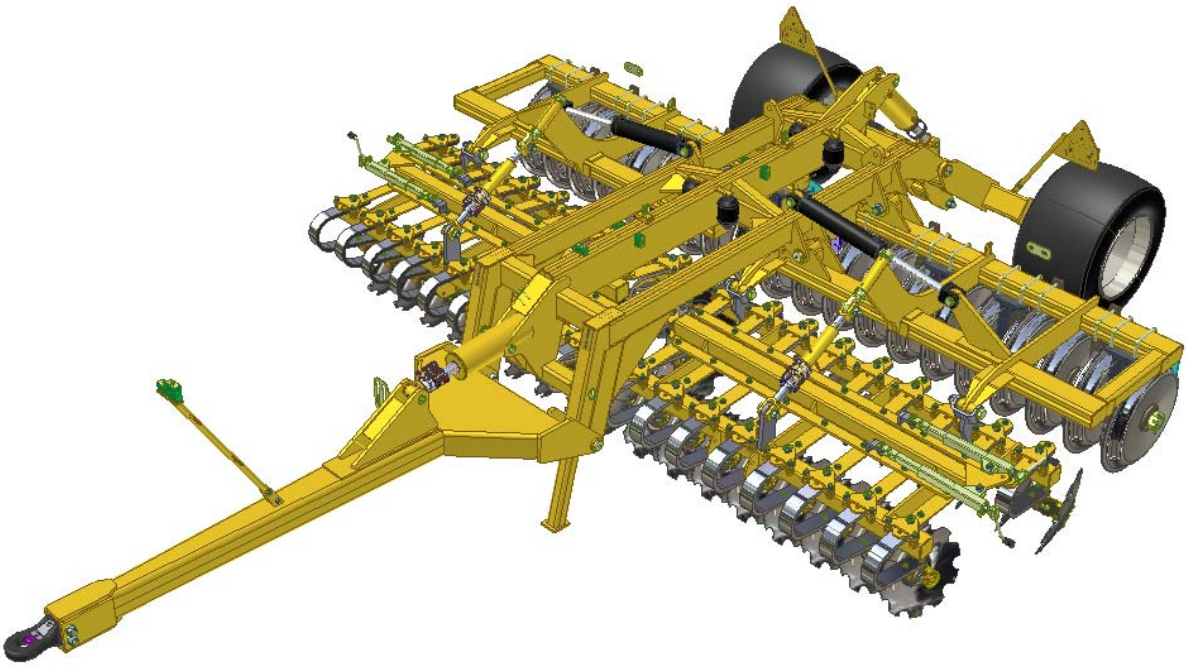

DECLARATION OF CONFORMITY

Simba International Limited hereby declare that the **Simba X-Press**, as defined by the Serial Number attached to the Machine Chassis, conforms with the following Directives and Regulations, and has been certified accordingly.

EC Machinery Directive 98/37/EC.

The Supply of Machinery (Safety) Regulations 1992 (S.I. 1992/3073) as amended (S.I. 1994/2063 and S.I. 2005/831).

The Provision and Use of Work Equipment Regulations 1992 (S.I. 1992/2932).

Specifically related harmonised standards are:

EN ISO 12100-1: 2003 (Safety of Machinery).

EN ISO 12100-2: 2003 (Safety of Machinery).

EN 1553: 2000 (Agricultural machinery - agricultural self-propelled, mounted, semi-mounted and trailed machinery - common safety requirements).

THE MANUFACTURER:

Simba International Limited
Woodbridge Road
SLEAFORD
Lincolnshire
NG34 7EW
England

Telephone (+44) (0)1529 304654.

CERTIFIED ON BEHALF OF SIMBA INTERNATIONAL LIMITED:

Rod Daffern

Director

CE

WARRANTY
TERMS AND CONDITIONS

In this warranty Simba International Ltd., is referred to as “the Company”.

1. Subject to the provisions of this warranty the Company warrants each new machine sold by it to be sold free from any defect in material or workmanship for a period of 12 months from date of installation with the end-user.

   Some specific items have additional warranty over and above the standard 12 months. Details of these can be obtained upon request directly from the distributor or Simba International Ltd.

2. If the machine or part thereof supplied by the Company is not in accordance with the warranty given in clause 1 the Company will at its option:

   (a) make good the machine or part thereof at the Company’s expense, or
   (b) make an allowance to the purchaser against the purchase price of the machine or part thereof, or
   (c) accept the return of the machine and at the buyers option either:
      I) repay or allow the buyer the invoice price of the machine or part thereof, or
      II) replace the machine or part thereof as is reasonably practical.

3. This warranty shall not oblige the Company to make any payment in respect of loss of profit or other consequential loss or contingent liability of the Purchaser alleged to arise from any defect in the machine or impose any liability on the Company other than that contained in clause 2.

4. Any claim under this warranty must be notified to the Company in writing specifying the matters complained of within 14 days from the date of repair.

5. Any claim under this warranty must be made by the original purchaser of the machine and is not assignable to any third party.

6. If the purchaser hires out the machine to any third party the warranty shall apply only to matters notified to the Company in writing within 90 days of the date of delivery and clause 1 shall be read as if the period of 90 days were substituted for the period of 12 months.

7. The warranty will cease to apply if:

(a) any parts not made, supplied or approved in writing by the Company are fitted to the machine or
(b) any repair is carried out to the machine other than by or with the express written approval of the Company or
(c) any alterations not expressly authorized by the Company in writing are made to the machine or
(d) the machine is damaged by accident or
(e) the machine is abused or overloaded or used for a purpose or load beyond its design capabilities, or used in conjunction with a tractor whose power output capability exceeds the stated implement power requirement by more than 40%. For the purpose of these terms and conditions, “stated implement power requirement” refers to wheeled tractors unless specifically stated. These power requirements should be reduced by 20% when used in conjunction with tracked tractors.
(f) the machine is operated as part of a ‘cultivation train’ where more than one implement is being towed, without the express written approval of Simba International Ltd.
(g) any maintenance is not carried out in accordance with the service schedules in the operator’s manual.
(h) the Installation and Warranty Registration Certificate is not received by Simba International Ltd., Service Dept., Woodbridge Road, Sleaford, Lincolnshire, England, NG34 7EW, <u>within 7 days</u> of installing a new machine.

Machine Identification

Enter the relevant data in the following list upon acceptance of the machine:

Serial Number	
Type of Machine	
Machine Width	
Year of Construction	
Delivery Date	
First Operation	
Accessories	

Operating Instructions/Spare Parts List: April 2009

Dealer Address:

Name: .....
Street: .....
Place: .....
Tel.: ....

Dealer's Customer No.: .....

SIMBA Address:

SIMBA
Woodbridge Road Ind. Est.
Sleaford
Lincolnshire
NG34 7EW

Tel.: 01529 304654
Fax: 01529 413468
E-Mail: simba.international@simba.co.uk

SIMBA Customer No.: .....

Contents

Machine Identification 5
Introduction 8
Foreword 8
Warranty Guidelines 8
1. Safety Data 9
1.1 Safety Symbols 9
1.2 Use for the Intended Purpose 11
1.3 Operational Safety 11
1.3.1 No liability for Consequential Damage 11
1.4 Traffic Safety 12
1.5 Accident Prevention 12
1.5.1 Hitching-up the Machine 12
1.5.2 Connecting the Hydraulic System 12
1.5.3 Changing Equipment 13
1.5.4 During Operation 13
1.6 Servicing and Maintenance 13
1.7 Maintenance Areas 14
1.8 Authorised Operators 14
1.9 Protective Equipment 14
2. Transportation/Installation 15
2.1 Delivery 15
2.2 Transportation 15
2.3 Installation 15
2.4 Hitching Up 16
2.4.1 Hitching a Tractor to the X-Press / Preparing for Transport 16
2.5 Folding and Unfolding 17
2.5.1 Unfolding into the Work Position 17
2.5.2 Folding into the Transport Position 17
2.5.3 Following Harrow Operation 18
2.6 Air Brake Coupling Procedure 18
2.7 Preceding and Trailing Implements 19
2.7.1 Hitching a Disc Harrow to the X-Press 19
2.7.2 Transporting an X-Press Towed Behind a Disc Harrow 20
2.7.3 Changing from Work to Road Transport (Disc Harrow Towed Behind an X-Press). 20
2.7.4 Hitching a Rear Roll to the X-Press 20
2.8 When Driving on the Road 21
2.9 Parking the Machine 21
3. Technical Data 23
4. Adjustment/Operation 24
4.1 Description 24
4.2 Disc Units 26
4.3 Double Disc Roller 27
4.4 DD Light Roll 27
4.5 Work Settings 28
4.6 Starting Settings 29
4.6.1 Variation of Settings 30
4.7 Adjusting Disc Frame Depth 31
4.8 Work Instructions 31
4.9 Checks 31

5. Servicing and Maintenance 32
5.1 Servicing 32
5.2 Cleaning 32
5.3 Disc Hub Maintenance 32
5.3.1 Tightening Disc Hubs 32
5.3.2 Bearing Seals 33
5.3.3 Reassembly 33
5.4 Brakes and Wheel Hubs 33
5.5 Double Disc Rolls 33
5.6 DD Light Rolls 33
5.7 Adjusting the System Pressure 34
5.8 Preparation for Storage 35
5.9 Operator Support 35
5.10 Maintenance Intervals 35
5.11 Maintenance Overview 36
5.12 Overview of Lubricating Points 37
5.13 Lubricating the Machine 38
5.14 Handling of Lubricants 38
5.15 Lubricants & Hydraulic Oil 39
6. Faults and Remedies 40
7. Parts & Assembly 41
7.1 Parts & Assembly Contents 41

Introduction

Foreword

Make sure you have read and follow the Operating Instructions carefully before using the machine. By doing so, you will avoid accidents, reduce repair costs and downtime and increase the reliability and service life of your machine. Pay attention to the safety instructions!

SIMBA will not accept any responsibility for any damage or malfunctions resulting from failure to comply with the Operating Instructions.

These Operating Instructions will assist you in getting to know your machine and in using it correctly for its intended purposes. First, you are given general instructions in handling the machine. This is followed by sections on servicing, maintenance and the action to be taken should a malfunction occur.

These operating instructions are to be read and followed by all persons working on or with the machine, e.g.:

• Operation (including preparation, remedying of faults in the operating sequence and servicing).
• Maintenance (maintenance and inspection)
• Transportation.

Together with the Operating Instructions, you receive a Spare Parts List and a Machine Registration form. Field service technicians will instruct you in the operation and servicing of your machine. Following this, the Machine Registration form is to be returned to SIMBA. This confirms your formal acceptance of the machine. The warranty period begins on the date of delivery.

☞ We reserve the right to alter illustrations as well as technical data and weights contained in these Operating Instructions for the purpose of improving the X-Press.

Warranty Guidelines

1. The period of liability for material defects (warranty) relating to our products is 12 months. In the case of written deviations from the statutory provisions, these agreements shall apply.

They shall become effective upon installation of the machine with the end customer. All wear parts are excluded from the warranty.

2. Warranty claims must be submitted to the SIMBA Customer Service Department in Sleaford via your dealer. It is only possible to process claims which have been correctly completed and submitted no later than 14 days after the date of repair.

3. In the case of deliveries made under the warranty which are subject to the return of the old parts, the old parts must be returned to SIMBA within 28 days after the damage occurred.

4. In the case of deliveries made under the warranty which are not subject to the return of the old parts, these parts must be kept for the purpose of further decisions for a period of 3 months after receipt of the warranty claim.

5. Warranty repairs to be carried out by outside companies, or repairs which are expected to take more than 10 working hours, must be agreed upon in advance with the Customer Service Department.

1. Safety Data

The following warnings and safety instructions apply to all sections of these Operating Instructions.

1.1 Safety Symbols

On the machine

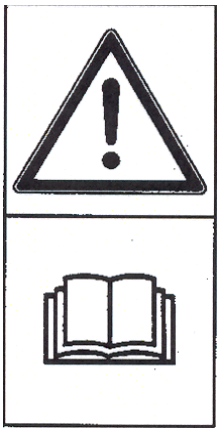

Read and observe the Operating Instructions before starting up the machine!

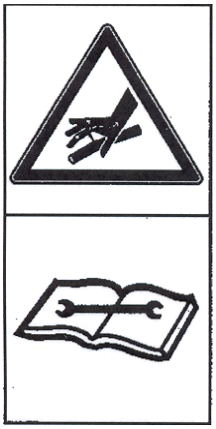

Watch out for escaping pressurised fluids! Follow the instructions in the Operating Instructions!

Never reach into areas where there is a danger of being crushed by moving parts!

Parts may fly off during operation. Keep a safe distance away from the machine!

Keep clear of the working range of foldable machine components!

No passengers are allowed on the machine!

Never reach into any revolving parts!

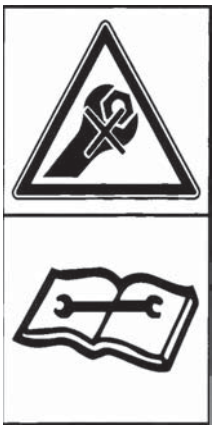

Refer to Operating Instructions before attempting maintenance.

Operating Instructions:

The Operating Instructions distinguish between three different types of warning and safety instructions. The following graphic symbols are used:

Important!

Risk of injury!

Risk of fatal and serious injuries!

It is important that all the safety instructions contained in these Operating Instructions and all the warning signs on the machine are read carefully.

Ensure that the warning signs are legible. Replace any signs that are missing or damaged.

These instructions must be followed in order to prevent accidents. Inform other users of the warnings and safety instructions.

Do not carry out any operations which may affect safe use of the machine.

1.2 Use for the Intended Purpose

The SIMBA X-Press is built using the latest technology and in accordance with the relevant recognised safety regulations. However, risks of injury for the operator or third parties and impairment of the machine or other tangible assets can arise during use.

The machine is only to be operated when in a technically perfect condition and for the intended purpose, taking into consideration safety and risks and following the Operating Instructions. In particular, faults that can impair safety are to be remedied immediately.

Original parts and accessories from SIMBA have been specially designed for this machine. Spare parts and accessories not supplied by us have not been tested or authorised. Installation or use of non-original SIMBA products may have a detrimental effect on specific design features of the machine and affect the safety of machine operators and the machine itself. SIMBA will accept no liability for damage resulting from the use of non-original parts or accessories.

The SIMBA X-Press is designed solely as a cultivation implement. Use for any other purpose, e.g., as a means of transport, will be deemed to be improper use. SIMBA will accept no liability for damage resulting from improper use. The risk will be borne solely by the operator.

1.3 Operational Safety

The machine is to be put in operation only after instruction has been provided by an employee of the authorised dealer or an employee of SIMBA. The “Machine Registration” form is to be completed and returned to SIMBA.

All protective and safety equipment, such as removable protective equipment, must be in place and functioning reliably before the machine is put in use.

☞ Check screws and bolts regularly for tightness and retighten if necessary.

☞ In the event of malfunctions, stop and secure the machine immediately.

☞ Ensure that any faults are remedied immediately.

1.3.1 No Liability for Consequential Damage

The X-Press has been manufactured by SIMBA with great care. However, problems may still occur when it is used for the intended purpose. These may include:

- Worn wearing and other parts.
- Damage caused by external factors.
- Incorrect driving speeds.
- Incorrect setting of the unit (incorrect attachment, non-adherence to the Setting instructions).

☞ Therefore, it is crucial to always check your machine before and during operation for correct operation and adequate application accuracy.

Compensation claims for damage which has not occurred to the machine are excluded. This includes any consequential damage resulting from incorrect operation.

1.4 Road Traffic Safety

When driving on public roads, tracks and areas, it is important to observe the relevant road traffic laws as well as the specific regulations relating to this machine.

☞ Pay attention to the permitted axle loads, tyre carrying capacity, and total weight in order to maintain adequate braking and steerability.

☞ Passengers on the machine are strictly forbidden!

☞ Max. road transport speed 16mph (25km/h).

1.5 Accident Prevention

In addition to the Operating Instructions, it is important to observe the accident prevention regulations specified by agricultural trade associations.

1.5.1 Hitching-up the machine

There is a risk of injury when hitching/ unhitching the machine. Observe the following:

- Secure the machine against rolling.
- Take special care when reversing the tractor!
- There is a risk of being crushed between the machine and the tractor!
- Park the machine on firm, level ground.

1.5.2 On the Hydraulic System

Do not connect the hydraulic lines to the tractor until both hydraulic systems (machine and tractor) are depressurised.

⚠ Any hydraulic system containing an accumulator can remain under pressure permanently (even after following manual depressurisation procedures with a tractor / implement combination). It is therefore important to check all lines, pipes, and screw connections regularly for leaks and any recognisable external damage.

Only use appropriate aids when checking for leaks. Repair any damage immediately. Spurting oil can cause injuries and fires!

In case of injury, contact a doctor immediately.

The socket and plugs for the hydraulic connections between the tractor and the machine should be colour-coded in order to avoid incorrect use.

1.5.3 Changing Equipment

• Secure the machine to prevent it from accidentally rolling away!
• Use suitable supports to secure any raised frame sections suspended above you!
• Caution! Risk of injury due to projecting parts!

☞ Never climb on to rotating parts such as the roll unit. These parts may rotate causing you to slip and suffer serious injury!

1.5.4 During Operation

Ensure that the working range and the area around the machine are clear (children!) before operating the machine.

Always ensure adequate visibility!

Do not stand on the machine while it is in operation!

Operators must have a valid driving licence in order to drive on public roads. In the operating area, the operator is responsible for third parties.

The person in charge must:

• provide the operator with a copy of the Operating Instructions, and

• ensure that the operator has read and understood the instructions.

• make sure that the operator is aware of the specific regulations relating to the machine when driving on public roads.

1.6 Servicing & Maintenance

Ensure that regular checks and inspections are always carried out within the periods required by law or specified in these Operating Instructions.

When carrying out service and maintenance work always:

• switch off the tractor engine and remove the ignition key.
• wait until all the machine parts have stopped moving.
• depressurize the hydraulic system.

Prior to performing maintenance and servicing work, ensure that the machine is unfolded, positioned on solid, level ground and is secured to prevent it rolling away. Do not use any parts to climb on to the machine unless they are specifically designed for this purpose.

Before cleaning the machine with water, steam jets (high-pressure cleaning apparatus) or other cleaning agents, cover all openings into which, for reasons of safety or operation, no water, steam or cleaning agents are to penetrate (bearings, for instance).

Next, check all hydraulic lines for leaks, loose connections, chafe marks and damage. Remedy any deficiencies immediately!

Lubricate all the lubricating points to force out any trapped water.

In the case of hydraulic cylinders that have been cleaned using high pressure equipment ensure that all hydraulic circuits are functional and pressurised fully in both directions. This provides the necessary coating of oil onto cylinder rods after cleaning.

When carrying out servicing and maintenance work, retighten any loose screw connections.

1.7 Operating Areas

The operating areas include the drawbar, hydraulic connections and depth adjustment equipment as well as all operating points requiring maintenance.

All operating areas will be specified and described in detail in the following chapters on servicing and maintenance.

Observe all safety regulations included in the Section dealing with Safety, and in the subsequent sections.

1.8 Authorised Operators

Only those persons who have been authorised and instructed by the operator may operate the machine. The operator must be at least 16 years of age.

1.9 Protective Equipment

For operation and maintenance, you require:

• Tight fitting clothing.

•Strong protective gloves (to provide protection against sharp-edged machine components).

• Protective goggles (to stop dirt and/or oil getting into your eyes).

2. Transportation and Installation

Transportation and initial installation of the machine are described in this chapter.

2.1 Delivery

The machine is normally delivered, fully assembled.

• The machine can be lifted off with a crane or other suitable lifting equipment.

• The machine should be hitched to a tractor and driven off a low-loader.

2.2 Transportation

The X-Press can be transported on public roads by hitching it up to a tractor or on a low-loader.

• It is important to observe the permitted dimensions and weights when transporting the machine.

• If the machine is transported on a trailer or a low-loader, it must be secured using straps or other devices.

• Before transporting the machine on public roads, it must be adjusted to its transportation position and the stipulations relating to road transportation fulfilled.

The transportation width can vary according to the adjustment of working parts (eg. discs, tines, etc). It may be necessary to adjust these elements in order to achieve the minimum transport width.

Adjustments, including the attachment of transport devices, should be made at ground level; lowering the machine may be necessary to achieve this.

• The maximum permissible speed is 25 km /h.

2.3 Installation

When carrying out installation and maintenance work there is a higher risk of injury. It is important that you familiarise yourself with the machine and read the Operating Instructions beforehand.

Operator instruction and initial installation of the machine are carried out by our service technicians or authorised distributors.

The machine must not be used in any way beforehand! The machine can only be released for operation after instructions have been provided by our service technicians or authorised distributors.

• If any modules or parts have been removed for transportation, these shall be mounted by our service technicians/authorised dealers before the instruction takes place.
• Check all important screw connections!
• Lubricate all nipples and joints!
• Check all hydraulic connections and lines for damage.

2.4 Hitching Up

2.4.1 Hitching up a Tractor to the X-Press / Preparing for Transport

When hitching-up the machine, ensure that no-one is between the tractor and the machine.

When the X-Press is parked for extended periods of time it should ideally be left in the unfolded, i.e. work, position for stability, safety and ease of access for maintenance. However, parking the X-Press in the folded position (using the parking stands provided) is acceptable in the normal course of operation.

Tractor Oil Flow Adjustment: As a general rule the tractor oil flow rate should be set in the lowest setting before starting. This can then be increased to allow the desired rate of operation as applicable. This will minimise excessive oil flow and consequent power usage and heat generation.

1. Ensure the tractor hydraulics are depressurised and in the locked or closed (not float) setting.

2. Ensure the rear axle taps are locked to avoid high pressure at the quick release couplings.

3. Couple the hydraulic hoses to the tractor ensuring that the two wing hoses (yellow) are together and the two drawbar cylinder hoses (red) are together.

4. Connect the tractor to the drawbar using the hydraulics to raise or lower the height of the shackle.

5. Open the rear axle taps

6. Carefully operate the hydraulics to lower the drawbar and tilt the X-Press onto the road transport wheels. Fully extend the drawbar and axle cylinders.

7. If the machine is unfolded then operate the fold circuit and fold the machine. Fit the wing strap to tie the two wing sections together.

The machine should be lowered so that the transport strap can be fitted from the ground. Do not climb on the machine.

8. Ensure that parking stands are locked up in their work positions.

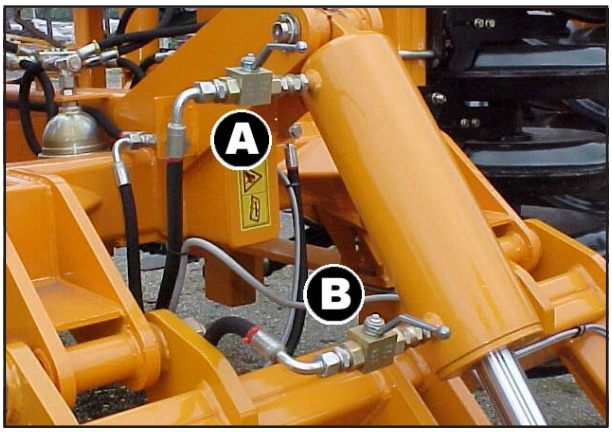

Fig. 2.01: Rear Axle Cylinder

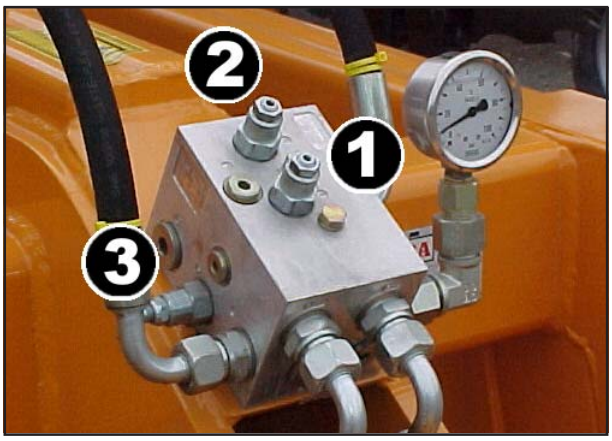

Fig. 2.02: Manifold Block

2.5 Folding and Unfolding

2.5.1 Unfolding into the Work Position

1. Ensure that the taps on the rear axle cylinder (Fig. 2.01, taps A and B) are in the open position (ie. in line with flow).

2. Remove the transport strap from the rear wing cylinders. Do not climb on the machine to remove the transport strap.

3. Lift the machine clear of the ground ready for unfolding.

4. Operate the hydraulics to fully unfold the wings.

☞ When wings are fully lowered they will appear to be lower at the wingtips. This is to enable the machine to 'float' over uneven ground in work and is normal.

5. Ensure that the parking stands are in the fully raised position.

6. Lower the machine to the ground until the drawbar cylinders touch the depth stops.

7. Retract the rear axle cylinders completely.

8. Close the taps on the rear axle to lock the wheels clear of the ground during work.

9. Check the wing pressure on the gauge (shown in Fig. 2.02). If this is above or below the desired value then pressurise the wings to fold which will zero the setting. Increase the pressure on the cylinder side by adjusting the valve (Fig.2.02, valve 3) clockwise. By rotating anticlockwise the pressure will be reduced (see page 34 for more details). Pressurise to unfold until the required pressure is achieved.

10. Draw the X-Press into work then set the desired pitch of the machine by adding or removing shims from the drawbar cylinder or disc frame adjusters. The chassis should ideally be set to run slightly nose high. The drawbar hydraulics may be worked in float if desired.

2.5.2 Folding into the Transport Position

1. Open the axle taps (Fig. 2.01, taps A and B).

2. Operate the hydraulics to fully raise the machine.

3. Fold the machine fully.

4. Lower the machine to maximise stability while ensuring adequate clearance for road transport.

5. Close the taps on the rear axle. Fit the transport strap for transport safety. The strap should be fitted from the ground. Do not climb on the machine.

6. The machine is ready for transport. If the X-Press is to be unhitched from the tractor in the folded position the parking stands should be lowered.

Fig. 2.03 Folded Machine

2.5.3 Following Harrow Operation

Into Work:

1. Arrive in field and unfold machine according to operating instructions

2. Whilst at rear of machine closing axle taps move Pins (qty 2) from front most holes (by lug) to rear hole.

3. Remove pin on outer quadrant plate and re-position in the highest possible hole for storage.

4. Driving forward will flip the harrow out into a work position

5. When turning in work, tip the machine rearwards into the roll. Reversing the machine in this position allows the harrow to flip temporarily into the transport position. Driving forwards again flips the harrow back into work.

Turning in work must only be on the rear roll. Attempting to lower the transport axle with the harrow in the work position will seriously damage the following harrow components.

Into Transport:

1. Tilt the X-Press onto the rear roll and reverse the machine slightly as if performing a headland turn.

2. Whilst at the rear of the machine opening the transport axle taps, move the harrow clamp pins (qty 2) from the front holes to the rear holes by the lugs.

3. Use the pin in the outer quadrant plate to the lowest position permitted that it will lock the harrow arm down.

4. Continue folding the X-Press in accordance with the operating instructions.

2.6 Air Brake Coupling Procedure

Please refer to the following procedure when coupling or decoupling any item of SIMBA machinery fitted with an AIR brake or AIR and HYDRAULIC brake system. Please note that this procedure does not apply to any machines fitted with a HYDRAULIC system ONLY.

2.6.1 When Coupling

1. Reverse up to the machine and connect the machine to the tractor as instructed to in Section 2.4.1.

2. With the machine connected couple the air lines. When coupling ensure the yellow line is attached first followed by the red line.

3. Your brake hoses are now attached and are ready for operation.

4. Continue with the coupling process as instructed in Section 2.4.1.

2.6.2 When De-coupling

1. Bring the machine to the parking position as instructed to in Section 2.9.

2. With the machine still connected to the tractor remove the red brake line followed by the yellow line.

3. Your brakes will now be ON and will hold, ensuring they have been adjusted and maintained correctly, the machine in position. (note: if the machine's tank is drained of air once all lines have been detached the brakes will come off (same situation as pushing the shunt valve).

4. Continue de-coupling the machine until it is fully disconnected.

By following the above instructions you will see that at NO point in the coupling or decoupling process has the red line been left in the tractor on its own. This is intentional and should be considered the 'rule' to coupling the hoses.

2.7 Preceding & Trailing Implements

2.7.1 Hitching a Disc Harrow to the X-Press

1. Remove the transport straps from the disc harrow, exercise great CARE when extending the axle cylinder.

2. Reverse the disc harrow up to the X-Press drawbar ensuring that the two drawbars are aligned allowing a slight clearance to enable the machines to be coupled together.

3. Lower the disc harrow to the ground.

4. Connect the four hydraulic hoses from the X-Press into the disc harrow rear outlets ensuring that the two wing hoses are together and the two drawbar cylinder hoses are together. Ensure that the folding circuits and lift drawbar circuits are coupled correctly.

5. Raise the X-Press drawbar above the disc drawbar (200mm approx.).

6. Raise the disc harrow to the same height as the X-Press drawbar then reverse the disc harrow to couple the two machines together. A pair of additional taps (P00774) may be required in the lift circuit of the disc harrow or the X-Press. This will isolate the drawbar circuit.

7. Operate the hydraulics to lower the rear axle and drawbar, tilting the X-Press onto the road transport wheels. Fully extend the drawbar cylinders.

8. Operate the hydraulics to fold the wings.

9. Operate the hydraulics to lift the disc harrow into the transport position.

10. Fit the disc harrow transport straps.

11. Fit the X-Press wing transport strap to tie the two wing sections together.

12. Ensure that parking stands are locked up in their work position.

When the X-Press is used in tandem with a disc harrow the disc should be set to the operators manual i.e. front disc gang to be 50mm closer to the ground than the corresponding disc blade on the rear gang.

With both machines in the transport position i.e. raised and folded, the top frame of the disc harrow should be slightly nose down or horizontal even when the downward load from the X-Press is applied to the drawbar of the disc harrow.

The frame may be levelled by altering the rearward tilt of the X-Press to increase or reduce the loading on the disc rear drawbar.

2.7.2 Transporting an X-Press Towed Behind a Disc Harrow

With both machines in the transport position i.e. raised and folded, the top frame of the disc harrow should be slightly nose down or horizontal even when the downward load from the X-Press is applied to the drawbar of the disc harrow. The top frame should NEVER be tail low in transport as this will give a high negative loading on the tractor which could lead to loss of traction to the rear wheels.

Extreme caution must be taken when the X-Press is transported up steep gradients and across side slopes. On the wide models, higher drawbar loading can be achieved by shortening the drawbar cylinder.
Prior to leaving the field to travel on a public highway ensure that any clods of soil are removed from the machine to prevent them from fouling the road.

MAXIMUM ROAD TRANSPORT SPEED 16 MPH (25 KPH).

2.7.3 Changing from Work to Road Transport (X-Press Towed Behind a Disc Harrow)

1. Remove the disc harrow wing locking bolts.

2. Operate the hydraulics to raise the disc and X-Press.

3. Operate the hydraulics to fold the wings on both the disc harrow and the X-Press.

4. Fit the transport straps to both machines.

☞ It may be necessary to shorten the levelling springs until the top frame of the disc harrow is horizontal or slightly nose down before moving the machines.

Shortening the X-Press drawbar cylinder will increase the loading on the rear of the disc frame. If necessary this can be used to level the disc top frame for road transport.

2.7.4 Hitching a Rear Roll to the X-Press

Follow procedure 2.4 (page 16) to couple a tractor to the X-Press. Once the tractor is safely connected to the implement and in its folded setting, raise the machine fully clear of the ground.

1. Reverse the X-Press up to the roller.

2. Align the X-Press and roller drawbars, lower the X-Press to the ground and depressurise the lift hydraulics.

3. Raise / lower the axle as required to align the respective machines' drawbars and couple together.

4. Couple the rear roll to the lift circuit of the X-Press, ensuring that the hoses are connected to the corresponding circuit on the trailing machine.

5. Couple the rear roll wing (fold) circuit to the wing (fold) circuit of the X-Press.

6. Fully raise the X-Press and the roll clear of the ground.

7. Check that all transport straps / devices are fitted.

2.8 When driving on the road

When driving on the road the machine must be converted to the transportation position.

When driving on the road, raise the machine completely to prevent the working elements dragging on the ground.

2.9 Parking the machine

In order to avoid damage as a result of moisture, the machine should be parked, if possible, indoors or under cover.

When manoeuvring the machine, pay attention to your surroundings. Ensure that nobody is in the manoeuvring area (watch for children!).

• Park the machine on level and solid ground.
• With the machine raised move the parking stands into position.
• Lower the machine onto the parking stands ensuring that it is stable.
• Remove the drawbar pin and drive forward slowly until hitch is clear of tractor drawbar.
• Lower the drawbar to the ground.
• Switch off the tractor.
• Disconnect hydraulic lines from the tractor.

3. Technical Data X-Press

	4.6m	5.5m	6.6m
Working Width	4600mm	5500mm	6600mm
Transport Width	2950mm	2950mm	2950mm
Transport Height	2790mm	3290mm	3790mm
Length	6700mm	6700mm	6700mm
Weight	5540kg	6350kg	7570kg
No. of Discs	36	44	52
Tractor Power Required (H.P.)*	140/150	160/180	200/220

* It is important to correctly match your implement to your tractor for optimum performance. Two power ratings are listed above. The lower HP figure relates to tracked tractors, the higher HP figure relates to wheeled tractors.

4. Adjustment/Operation

4.1 Description

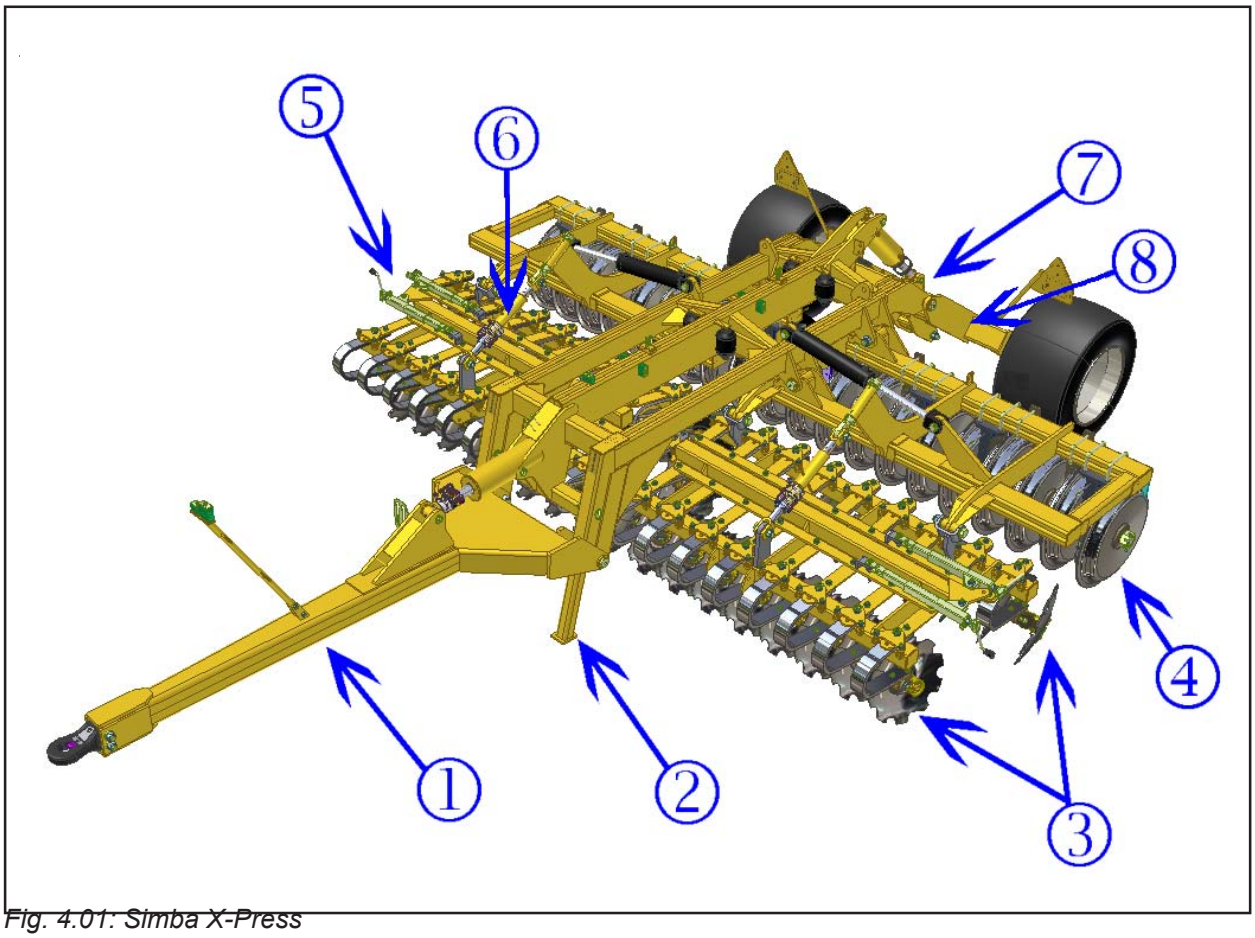

Fig. 4.01: Simba X-Press

1. Drawbar
2. Parking Stands
3. Discs
4. DD700 Roll
5. Disc Angle Adjusters
6. Disc Frame Pitch Adjusters
7. Rear Drawbar
8. Transport Axle

The SIMBA X-Press is a versatile implement designed to perform an excellent shallow cultivation combined with effective consolidation.

It can be used in reduced tillage systems to incorporate stubble or to work down ploughing on lighter soil types. Like all Simba machines it features the latest innovations which combine to give an efficient, well-built unit with unrivalled reliability.

Consolidation is key to most operations. The design of the X-Press ensures that this is not compromised during use. This is because the penetration of the front discs is achieved by angling the disc gangs and not by transferring weight from the rear roller onto the discs. The in line rear roller ensures uniform consolidation is achieved across the field.

The X-Press can operate in situations where high levels of surface trash exist. This is possible because of the massive clearance within the machine. The front and rear disc gangs are 1050mm (42") apart and the distance between the rear gang and the roller is another 815mm (33"). The fact that the DD roller is 700mm (28") in diameter also helps ease the flow of trash and ensures that the rolling resistance is kept to a minimum.

The X-Press is designed for high speed operation at 8-l2kph. The in-built weight of around 1 tonne per metre ensures that the desired depth is maintained at the optimal forward speed.

Movement from field to field or along the road is safe and simple. The X-Press wings fold vertically whilst the main frame raises parallel to the ground giving minimal height and width for transport. An optional rear drawbar allows a following implement (such as a Cambridge Roll) to be used and towed in tandem with the X-Press.

Because of the in line rear DD roller the X-Press can be tilted rearward during headland turns. The discs are then lifted clear off the ground reducing the risk of overworking the headlands.

4.2 Disc Units

The X-Press features two rows of discs which chop and mix the crop residue. A disc spacing of 250mm ensures a fine tilth and being arranged in a symmetrical format around the centre line of the machine, crabbing is eliminated, leaving the machine to pull straight making the most efficient use of the power available.

The discs fitted to the X-Press are 500mm in diameter (20") and 6mm thick. They are manufactured from heat treated chrome boron steel which ensures excellent wear resistance and enhanced working life.

Each disc is mounted on a Pro-Active sprung leaf linked to a track rod system. Gang angles can be varied with ease and accuracy using a graduated adjuster.

Adjustable angling of the discs (between 10°-25°) ensures penetration and stubble mixing are achieved in one pass. Working depth can be varied simply via shimmed adjusters. All this is achieved without compromise to consolidation.

A level, evenly cultivated finish is maintained by adjusting the balance of soil throw between the front and rear disc.

Sprung Pro-Active leaves offer protection against damage as well as offering a degree of contour following as they flex up and down in work.

The centre disc unit can be adjusted independantly of all other disc units to ensure a level finish across the machine width.

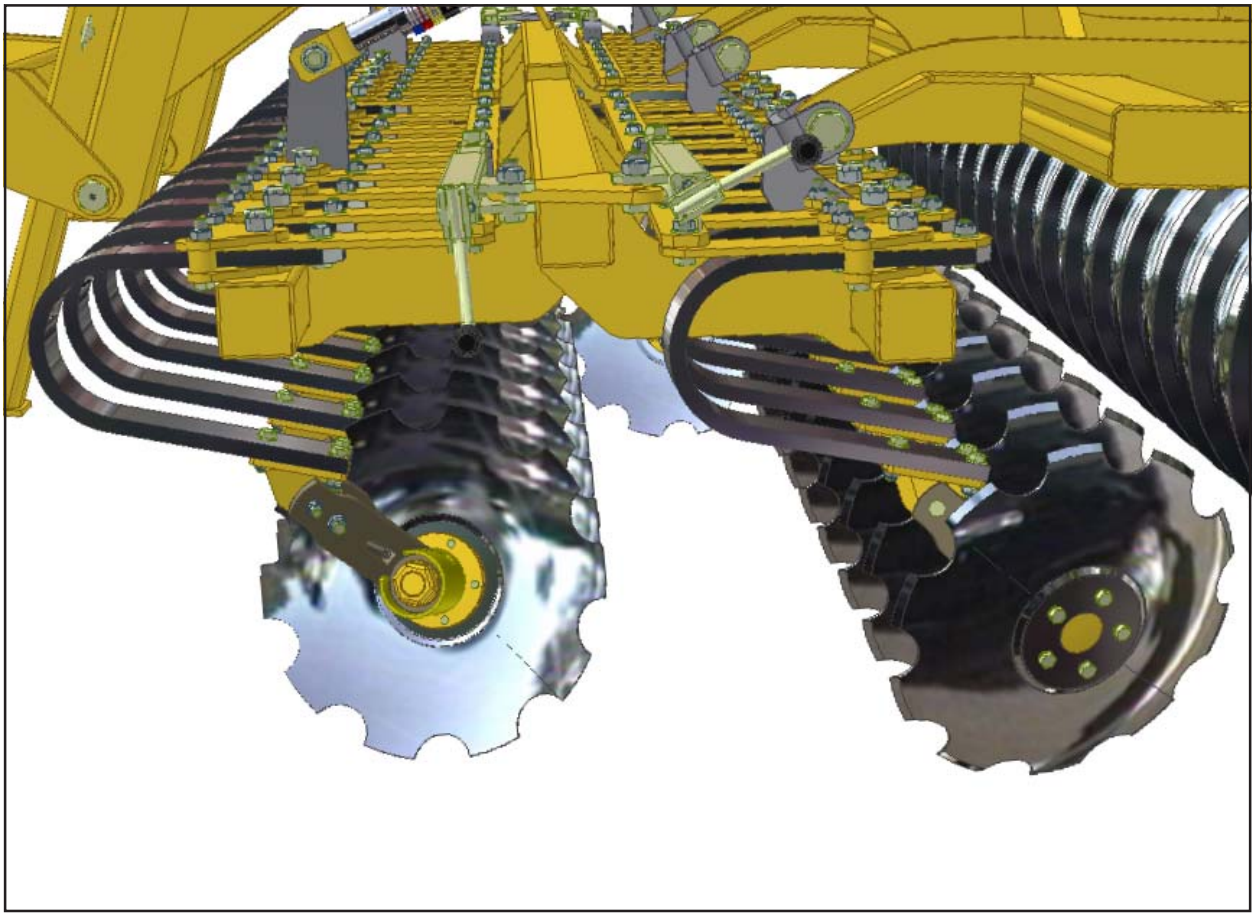

Fig. 4.02: Disc Frame

4.3 Double Disc Roller

The standard DD700 roller is made up of individual Double Disc (patented) Ring segments.

The DD rings are designed to consolidate the soil whilst cutting and crushing any clods.

Even in heavy, wet soils it can easily be operated with minimal blockages occurring.

The rear DD roller carries a proportion of the machine's weight to ensure consolidation. It also regulates the depth of the disc units. The corrugated surface left by the roller is weatherproof both for wet or dry situations.

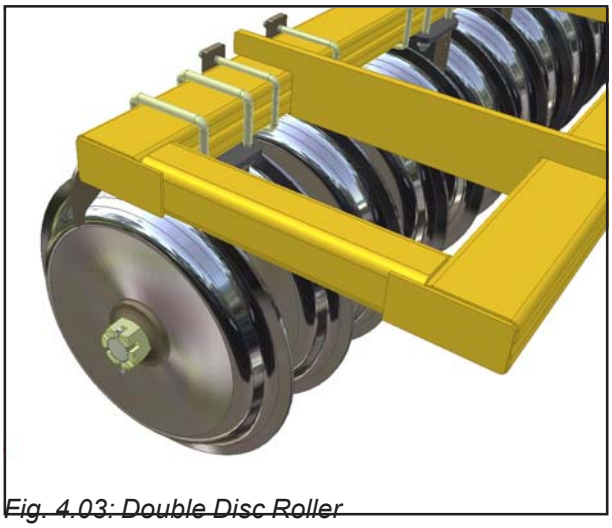

Fig. 4.03: Double Disc Roller

4.4 DD Light Roller

The DD Light roller is made up of individual Double Disc (patented) Ring segments.

The DD Light roll is designed to consolidate the soil whilst cutting and crushing any clods.

Even in heavy, wet soils it can easily be operated with minimal blockages occurring.

The rear DD Light roller carries a proportion of the machine's weight to ensure consolidation. It also regulates the depth of the disc units. The corrugated surface left by the roller is weatherproof both for wet or dry situations.

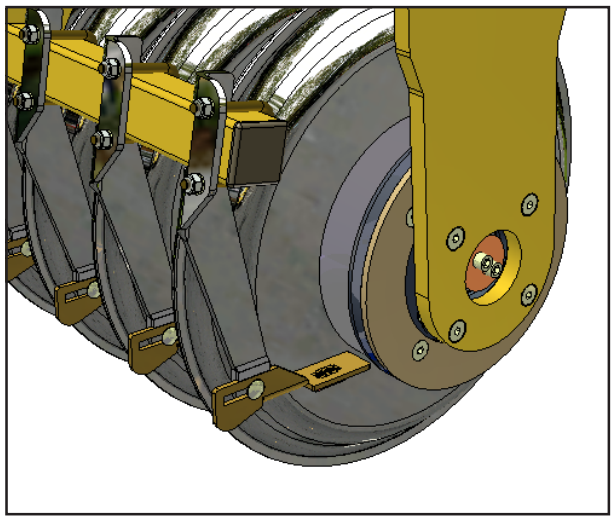

Fig. 4.04: DD Light Roll

4.5 Work Settings

In work the wing cylinders should be fully extended. The gangs are able to float over any undulations on the ground due to their floating frames. A simple pressurised hydraulic circuit automatically sets itself as the wings are unfolded.

Optimum performance has been found to be achieved when the press roll rings have worn away the painted finish leaving a smooth shiny surface. When the press roll rings are new or rusty, soil may tend to pick up on the surface and blockage may occur, this will reduce when the rings are shiny again.

The X-Press should be run with the chassis slightly nose high by extending the drawbar cylinders to the necessary position. In practice it is possible to use the X-Press on ground conditions that are unsuitable to achieve the desired effect, and it is usually possible to operate the press without regular blockage under such unsuitable conditions, assuming that the axles are tight and rings smooth. As such, especially under wet conditions, it is advisable to check on the cultivation effect of the disc and X-Press combination.

It is not necessary to tilt the X-Press onto the transport wheels during headland turns whether the machine is used independently or in tandem with a disc harrow. Normally, the X-Press should be tilted sufficiently for the discs to clear the ground (at which point the rear axle wheels will still be clear of ground contact).

General Rules when Setting the X-Press

- The lighter the land conditions the less the disc angle required and the forward speed can be increased.
- The wetter the land conditions the less the disc angle required and the forward speed will need to be decreased.
- Heavier land will require more of a disc angle and a slower forward speed.
- The more the trash the less the angle on the discs and forward speed will have to be decreased.
- On ploughed land reduce the disc angle to give a cutting/chopping action.
- In hard conditions increase the disc angle to increase penetration.

Disc Angle Setting

4.6 Starting Settings

The following pages detail the recommended starting settings for the X-Press. These settings can then be used as a base for further adjustment in order to get the optimum performace from your machine.

Ensure all settings from the left and right hand sides of the machine mirror each other.

Drawbar Cylinder

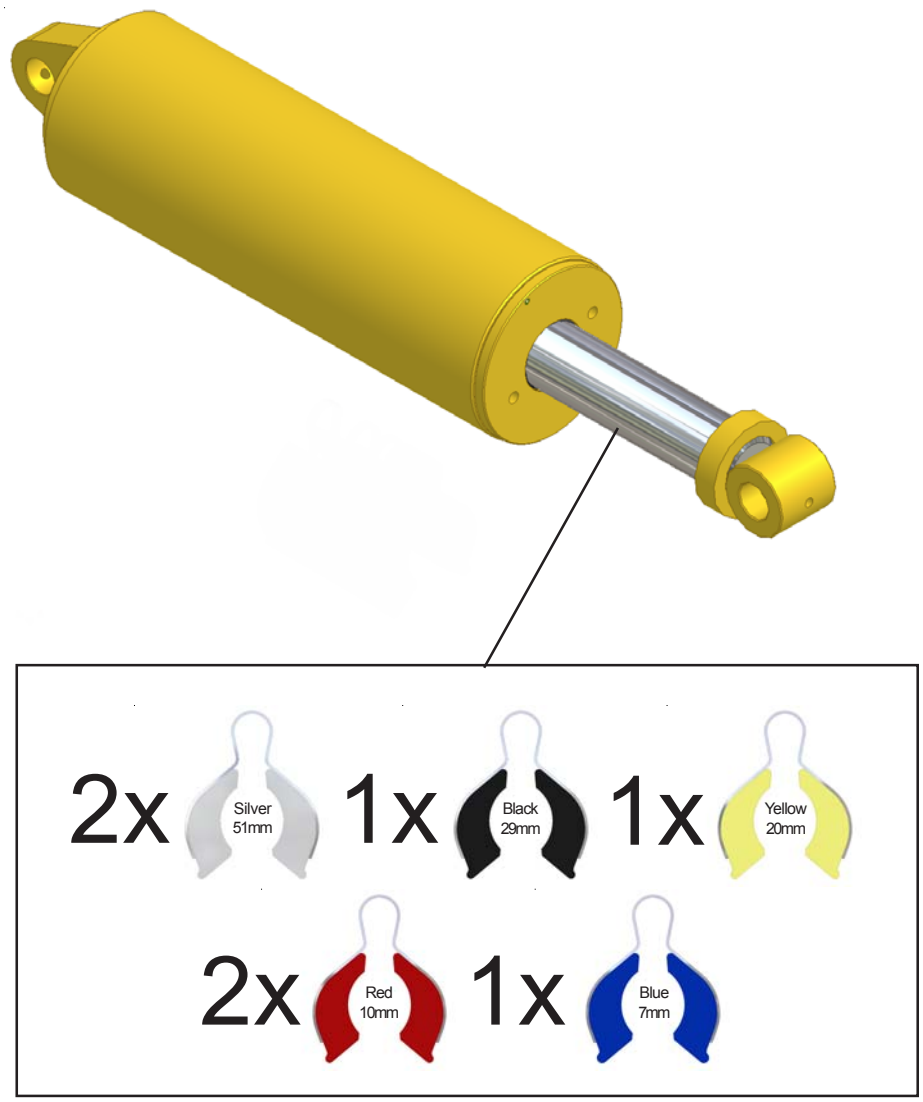

The drawbar cylinder shim settings are subject to the tractor drawbar height. As such, the shim settings shown above are intended as a suggestion only. The machine should be set to run with the chassis level to nose high depending upon working depth.

Disc Frame Pitch

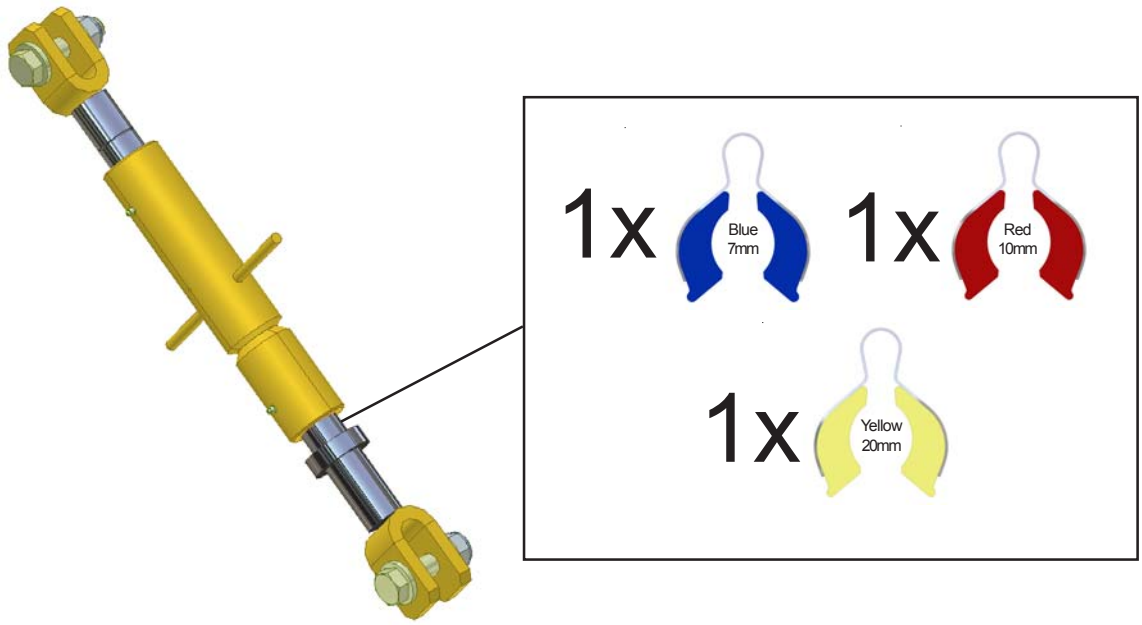

The centres of the adjuster should be factory set to 640mm when the machine is received. This is an ideal starting point before beginning to add shims to set the disc pitch.

Disc Angle Adjusters

Front Gang

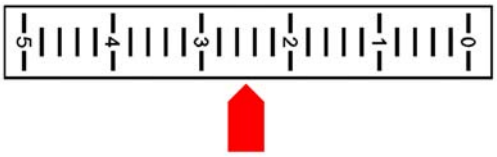

Rear Gang

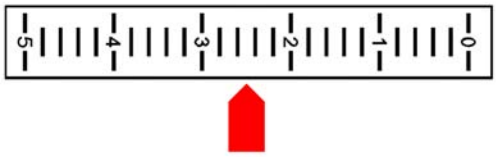

4.6.1 Variation of Settings

If working conditions change (for example, from dry to wet conditions) then the following table should be consulted as a rough guide.

VARIATION IN CONDITION	SETTING REVISION
FROM HARD/DRY TO LOOSE/WET	REDUCE DISC ANGLE
	INCREASE DISC FRAME PITCH & DRAWBAR SHIM LENGTH (RATIO 2 DRAWBAR : 1 DISC PITCH)
FROM STUBBLES TO HIGHER TRASH (TO INCREASE INCORPORATION)	INCREASE DISC ANGLE
	REDUCE SPEED
	INCREASE DRAWBAR SHIMS
FROM SHALLOW TO DEEP (NOTE 75-100mm MAX WORKING DEPTH)	DECREASE DISC FRAME PITCH & DRAWBAR SHIM LENGTH (RATIO 2 DRAWBAR : 1 DISC PITCH)
	INCREASE DISC ANGLE
	REDUCE SPEED

4.7 Adjusting Disc Frame Depth

Adjustment of the disc frame depth is achieved by lengthening or shortening the adjusters as required in combination with raising or lowering the disc frames relative to the DD roller by adding or removing drawbar shims (for example, to increase disc depth remove drawbar shims and adjust the turnbuckle as required). Once set, the adjusters should be locked by adding shims to the lower end thread and tightening.

To change the settings it is advisable to lift the disc frames just clear of the ground so that the adjusters can be lengthened enough to fit the amount of shims required. When the shims have been fitted the machine can be lowered, making it easier to tighten the adjuster against the shims.

4.8 Work Instructions

Driving speed

The X-Press can be driven at speeds of up to 12 km/h.

This depends on the field conditions (type of soil, surface trash, etc.).

Drive more slowly if the conditions are difficult or a firmer finish is required.

Turning:

☞ Before turning, the machine should be eased out of work onto the rear roll while driving. Likewise, it should eased back into work once the turn has been completed.

Parking the Machine

In order to avoid damage as a result of moisture, the machine should be parked, if possible, indoors or under cover.

⚠ When manoeuvring the machine, pay attention to your surroundings. Ensure that nobody (children!) is in the manoeuvring area.

- Park the machine on level and solid ground.
- With the machine raised move the parking stands into position.
- Lower the machine onto the parking stands ensuring that it is stable.
- Remove the drawbar pin and drive forward slowly until hitch is clear of tractor drawbar.
- Lower the drawbar to the ground.
- Switch off the tractor.
- Disconnect hydraulic lines from the tractor.

4.9 Checks

The working quality depends on the adjustments and checks made prior to and during work, as well as on regular servicing and maintenance of the machine.

Before beginning work it is therefore important to carry out any necessary servicing and to lubricate the machine as required.

Checks prior to, and during work:

- Is the machine correctly hitched up and the coupling device locked?
- Have the hydraulic lines been connected according to the colour coding?
- Is the machine in a level operating position and the working depth set correctly?

Working Elements

- Are the discs and other cultivation tools in a serviceable condition?
- Are the scrapers still operable, so that the rolls do not jam?

5. Servicing and Maintenance

Follow the safety instructions for servicing and maintenance.

5.1 Servicing

Your machine has been designed and constructed for maximum performance, operational efficiency and operator friendliness under a wide variety of operating conditions.

Prior to delivery, your machine has been checked at the factory and by your authorised dealer to ensure that you receive a machine in optimum condition.

To ensure trouble-free operation, it is important that servicing and maintenance work is performed at the recommended intervals.

5.2 Cleaning

In order to ensure that the machine is always in operating condition and to achieve optimum performance, perform the cleaning and servicing work at regular intervals.

Avoid cleaning the roll / disc bearings with a high- pressure hose or a direct water jet. The housing, screwed connections and ball bearings are not watertight.

5.3 Disc Hub Maintenance

Grease every disc hub until grease shows from the seals according to the lubricating intervals outlined on page37.

Check disc hubs regularly for tightness.

Regularly examine hub caps, seals, shear and pivot bolts and all tracking bolts for tightness and effectiveness twice weekly or every 50 working hours (whichever is more frequent).

5.3.1 Tightening Disc Hubs

1 Ensure that the bearing seal is in the correct orientation when replacing / assembling components.

2 Ensure that the stub axle is free from dirt and the nut and outer bearing can easily slide on it.

3 Tighten the crown nut with a hand spanner (a torque wrench is not required) while turning the hub clockwise until the bearing drags slightly (you feel the hub turning heavily). Some resistance will be due to friction from the seal.

4 Turn back the crown nut to the next locking position. Even if the tightening of the nut has reached an exact fixing position, turn it back.

5 Insert the retaining pin.

6 Try to shake/rock the outer edge of the hub/spindle: play of 0.1 / 0.2mm will not reduce the bearings' life and, in addition, prevents overheating. If the adjustment is correct the hub should turn freely with the only friction being from the seal.

Fig. 5.01: Checking Disc Bearing Adjustment

5.3.2 Bearing Seals

It is important when replacing the labyrinth type bearing seals in disc hubs that the seal is fitted the right way round. The chamfered lip side should be at the outside of the bearing housing, nearest the disc arm (see *Fig. 5.02*). This chamfered lip prevents dirt ingress into the housing and also allows grease to be flushed though when greasing.

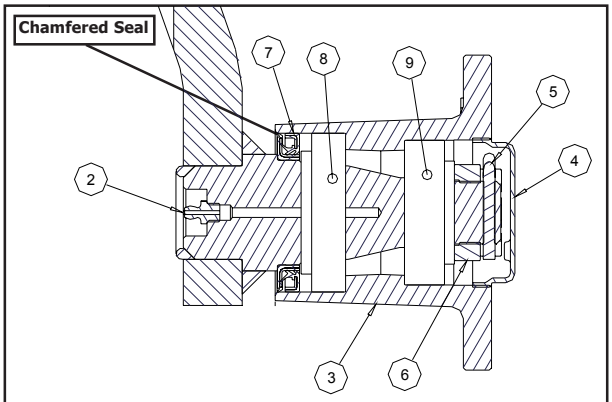

ITEM	PART NO	DESCRIPTION
1	---	DISC ARM
2	P12900	NIPPLE - GREASE M8
3	P14593	HUB CASTING
4	P14594	HUB CAP
5	P12908	SPRING PIN
6	P12907	NUT CASTLE M27x1.5
7	P12415	SEAL 64x45x9.5
8		BEARING 32008 40x68x19
9		BEARING 32206 30x62x21

Fig. 5.02: Correct Seal Orientation

5.4 Brakes & Wheel Hubs

The brakes should be tested before using for the first time and after the first laden journey.

Check that the road and parking brakes operate and release correctly before using the machine.

Check for hydraulic fluid and air leaks.

Brake and hub maintenance and servicing should be carried out by an authorised Simba dealer.

5.5 Double Disc Axles

The axles on this roller are tensioned by the main axle through the centre of the rings and bearings.

Specialist equipment is required for the disassembly of Double Disc axles. Please consult your dealer under any circumstances that require disassembly of these axles.

Maintenance of these rollers is limited to daily greasing of the bearings to flush out dirt, and regular inspection to ensure the assemblies are tight, and scrapers are correctly set. The axles can be tightened provided the bearing pillar 'U' bolts are loosened to avoid preloading the bearings as they move sideways to each other. Ensure the bearing pillars are re- tightened to the mainframe after this.

5.6 DD Light Roll

The spacers and rings on the DD Light Roll are held under tension by the end plates at the outer ends of the roll tube.

Specialist equipment is required for the disassembly of DD Light rollers. Please consult your dealer under any circumstances that require disassembly of these axles.

Maintenance of these rollers is limited to yearly/end of season greasing of the bearings and regular inspection to ensure the assemblies are tight, and scrapers are correctly set.

The scraper is intended to clear dirt from blocking between adjacent DD rings. If adjustment to the scrapers is required ensure that the scraper cannot contact the spacer even under load. Regularly inspect the spacers for signs of wear and adjust any scrapers to ensure no contact can be made.

5.7 To Adjust the System Pressure

A low oil flow should be used, i.e., tractor tickover or low flow selected.

The wing circuit is controlled by an overcentre valve contained within the manifold block which positively locks oil flow until pressurised by the tractor. System pressure can be retained in the circuit ***even after depressurisation*** of the tractor quick release couplings.

Exercise extreme care when checking the valve or circuits, and *under no circumstances* attempt to adjust or loosen fittings without prior reference to your authorised simba dealer, and detailed maintenance instructions.

It is normal to operate at 10-20 bar. This can be increased to 40-50 bar max, or reduced to 5 bar as conditions determine. Higher pressure will cause the wing tips to dig in causing the centre of the machine to lift it out. Too little pressure will cause the wing tips to lift out & the centre of the machine to dig in. When towing another implement behind the X-Press, the pressure may need increasing to compensate.

In all cases the normal adjustment method is to minimise system pressure & then increase by adjusting the pressure valve until the desired pressure is achieved.

In all cases, regardless of tractor make, adjustment should start from zero (minimum pressure) and gradually increase up to desired pressure value.

With the machine off the ground,

1. Pressurise the wings to unfold. As the unfolding begins the pressure reading on the gauge will drop. When the wings have fully unfolded the pressure reading will start to climb. Keep pressurising the wings until the gauge has stabilised at the pre-set pressure. The standard factory setting is 15 bar.

2. If the system needs adjusting:- Partially fold the wings & hold them in this position. To adjust the pressure utilise valve 3 (*shown in Fig. 5.03*). Unscrew the adjusting screw until no resistance can be felt (almost fully unscrewed position). Unfold the wings fully as before, checking the gauge reading. Maintain hydraulic pressure unfolding wings & adjust the screw whilst pressurising.

- Turning adjuster clockwise increases pressure.

- Turning adjuster anti-clockwise decreases pressure.

Once the desired pressure is achieved lock the valve. As a check, partially fold the wings, stop, and then unfold again maintaining pressure until the gauge stabilises at your desired setting.

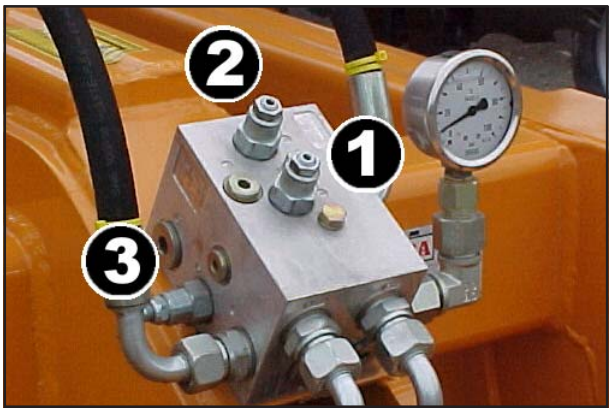

Fig. 5.03: Manifold Block

5.8 Preparation for Storage

If you need to store the machine for a longer period, observe the following points:

• Park the machine undercover if possible.
• Protect the roll / discs against rust. If you need to spray the implements with oil, use light biologically degradable oils, e.g. rape oil.

Cover any rubber sections before using oil sprays. These sections must not be oiled.
Remove any traces of oil with a suitable cleaning agent.

5.9 Operator Support

If you have a problem, please contact your dealer. They will endeavour to solve any problems which may occur and provide you with support at all times.

In order to enable your dealer to deal with problems as quickly as possible, it helps if you can provide them with the following data. Always state the:

• Customer Number
• Name and Address
• Machine Model
• Serial Number of Machine
• Date of Purchase and Operating Hours
• Type of Problem

5.10 Maintenance Intervals

Apart from daily maintenance, the maintenance intervals are based on the number of operating hours and time data.

Keep a record of your operating hours to ensure that the specified maintenance intervals are adhered to as closely as possible.

Never use a machine that is due for maintenance. Ensure that all deficiencies found during regular checks are remedied immediately.

Avoid sharp-edged and pointed parts (disc blades, etc.) when working on the machine.

Place the machine on suitable supports when working underneath! Do not work under a machine which is not supported!

5.11 Maintenance Overview

X-Press Maintenance Overview			
After first operation	Instructions	Interval	Note
Check all screw, bolt and plug connections	Check they are firmly seated. Tighten / Secure if necessary	---	---
Check wheel studs for tightness	Check on delivery and before transporting the machine	---	---
Lubricate machine	See overview of lubricating points	---	Page 37
During operation			
Lubricate machine	See overview of lubricating points	---	Page 37
Wheel studs	Check tightness before transporting the machine	10 hours	---
Disc Angle Adjusters, Disc Pitch, Working Depth	Check setting and ensure they are firmly secured	10 hours	Page 28
Hydraulic system and components	Check seals, signs of crushing/wear, function and condition	10 hours	Page 34
Disc Hub Units	Check condition, mountings and smooth operation	10 hours	Pages 26, 32
Roll bearings	Check condition, mountings and smooth operation	10 hours	Pages 27, 33
DD and DD Light roller ring segments	Check condition and ensure they are firmly secured	10 hours	Pages 27, 33
Safety devices (Parking stands, transport strap)	Check condition and function	10 hours	---
After season			
Lubricate machine	See overview of lubricating points	---	Page 37
Toplinks / Bolts	Grease any exposed threads	---	---
Entire machine	Carry out cleaning and maintenance	---	---
Spray Double Disc roll with oil	Use biological oil if possible - cover rubber elements	---	
Brakes & Wheel Hubs	Service	600 hours	Page 33
After 6 years			
Hydraulic pipes	Replace	MRL Anh I	EN 1533

5.12 Overview of Lubricating Points

X-Press Lubrication Points	Interval	Diag. No.
DD700 Roll Bearings	10 hours	5.04
DD Light Roll Bearings (one pump only!)	200 hours	5.04 (inset)
Disc Hub Bearings	200 hours*	5.05
Disc Pitch Adjuster	50 hours	5.06
Disc Angle Adjustment Jacks	200 hours	5.07
Wheel Bearings	600 hours	5.08
Drawbar & Transport Axle Cylinders	50 hours	5.09
Pivot Points on Wings / Drawbar	50 hours	-

** See page 39, section 5.15 for details*

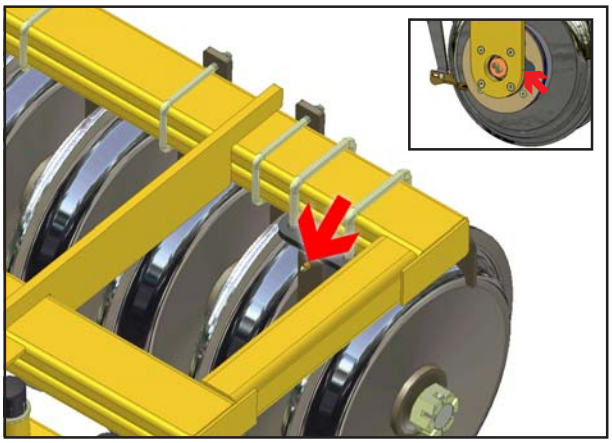

Fig. 5.04: DD Roll Grease Points (Inset: Rubber Roll)

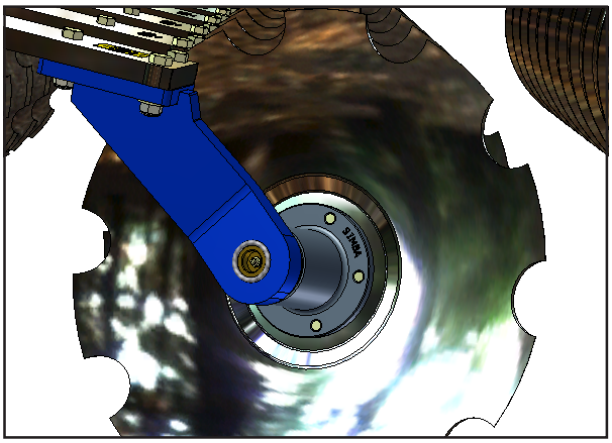

Fig. 5.05: Disc Hub Grease Points

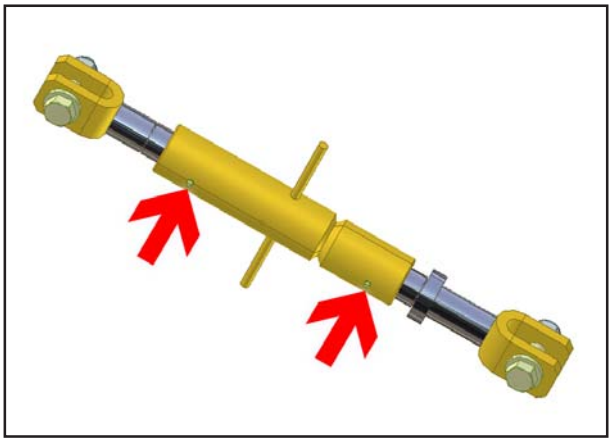

Fig. 5.06: Disc Frame Pitch Adj. Grease Points

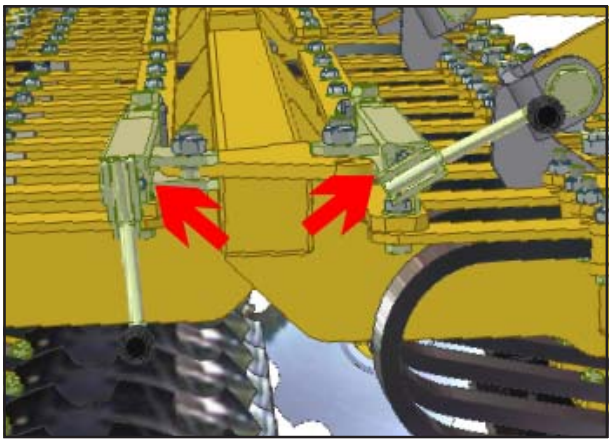

Fig. 5.07: Gang Angling Jack Grease Points

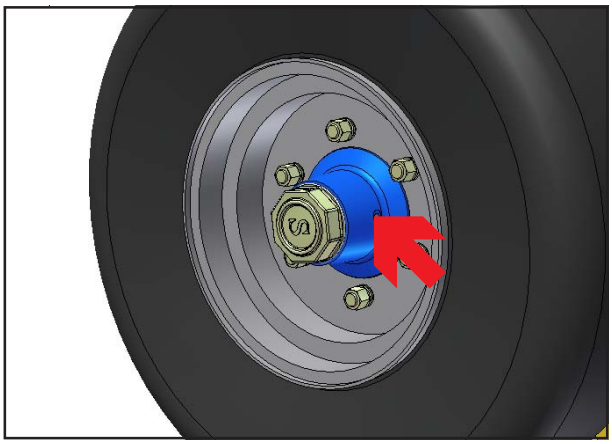

Fig. 5.08: Wheel Bearing Grease Points

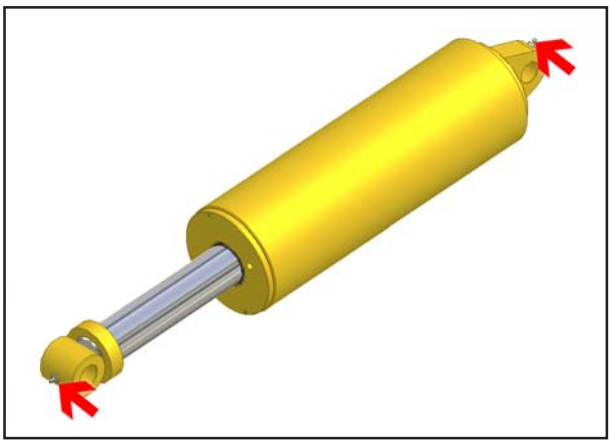

Fig. 5.09: Drawbar / Axle Cylinder Grease Points

5.13 Lubricating the Machine

Please read the section entitled "Using Lubricants" carefully before lubricating the machine.
The machine must be lubricated regularly in order for it to remain serviceable. Regular lubrication also contributes towards extending the service life of your machine.
The recommended lubricating intervals are specified in "Inspection" and "Maintenance Intervals".

After it has been washed using a high-pressure hose or steam cleaned, the machine should always be lubricated using a grease gun. Ensure that the universal joints and splined shafts are lubricated regularly.

5.14 Handling of Lubricants

Please ensure that you read the following instructions as well as the relevant information. This also applies to any of your employees who handle lubricants.

Hygiene

Lubricants do not present a health hazard provided they are used for their specified purpose.

In the case of prolonged skin contact, lubricants - especially low-viscosity oils - may remove the natural layer of fat contained in the skin, resulting in dryness and possible irritation .

It is important to take extreme care when handling waste oil as it may contain other irritants.

Vapours given off by cleaning agents and oils are also a potential health hazard.
You should therefore not carry any oily cloths around. Change soiled work clothing as soon as possible.

Always exercise extreme care and observe the recommended hygiene rules when handling mineral oil products. Details of these handling regulations can be found in information provided by the health authorities.

Storage and Handling

• Always store lubricants where they cannot be accessed by children.
• Never store lubricants in open or unlabelled containers.

Fresh Oil

• Apart from taking the usual care and observing hygiene rules, there is no need to take any special precautions when handling fresh oil.

Waste Oil

• Waste oil can contain harmful contaminants which may cause skin cancer, allergies and other illnesses.

Attention!

Oil is a toxic substance. Should you swallow any oil, do not try to vomit. Contact a doctor immediately.
Protect your hands with barrier cream or wear gloves to avoid contact with the skin. Wash off any traces of oil thoroughly with soap and hot water.

• Wash your skin thoroughly with soap and water.
• Use special cleaning agents to clean any dirt off your hands.
• Never wash oil residue from your skin with petrol, diesel fuel or paraffin.
• Avoid skin contact with any oily clothing.
• Do not keep any oily rags in your pockets.
• Wash soiled clothing before wearing it again.
• Ensure that any oily footwear is disposed of in the proper manner.

Measures in case of injury through oil

Eyes:

Should any oil be splashed into your eyes, rinse with water for 15 minutes. If the eye is still irritated, contact a doctor immediately

If oil is swallowed

If oil is swallowed, it is important not to induce vomiting. Contact a doctor immediately.

Skin irritation caused by oil

In case of prolonged skin contact, wash off the oil with soap and water.

Oil Spills

Use either sand or a suitable granular absorbent to soak up any spilt oil. Dispose of the oil-contaminated absorbent in the proper manner.

Oil Fires

Never use water to extinguish an oil fire. The oil will float on the water causing the fire to spread.

Burning oil-lubricant must be extinguished using a carbon dioxide powder or foam extinguisher. Always wear respiratory equipment when dealing with fires of this type.

Waste Oil Disposal

Oil-contaminated waste and used oil must be disposed of in accordance with current legislation.

Waste oil must be collected and disposed of in accordance with local regulations. Never pour used oil into unsealed sewage systems or drains or onto the ground.

5.15 Lubricants & Hydraulic Oil

Hydraulic System

The hydraulic fluid from the tractor is mixed with the hydraulic fluid from the machine.

The supplied machine hydraulic system contains Total AZOLLA ZS 32 oil.

Lubricants

Simba strongly recommend the use of **Lithium <u>Complex</u> EP2 Grease** in the disc and wheel hubs of your X-Press. This grease is a Lithium Complex soap dispersed in a mineral oil and is interpreted by IARC as being non-carcinogenic. Grease cartridges are available from Simba (P12710). Using this grease in combination with the laby-rinth type seal it is permissible to lengthen the greasing interval on the disc hubs to 200 hours. If using a standard agricultural grease the disc hubs should be lubricated every 50 hours.

Advantages of Lithium Complex EP2 Grease

- Excellent mechanical stability.
- Excellent load carrying properties.
- Wide temperature range.
- Excellent oxidation stability.
- Excellent water resistance.
- Compatability with other greases.

All other lubricating points on the machine can be lubricated with multigrade lubricating grease as specified in DIN 51825 KP/2K - 40.

6. Faults and Remedies

X-Press Troubleshooting		
Fault	Possible cause	Remedy
Wings riding up at outside of machine	Wings not pressured down	Raise onto transport wheels and pressure wings down
	Wing pressure too low	Increase wing pressure (refer to page 32)
	Hard conditions	Increase wing pressure (refer to page 32)
Centre section riding up	Wing pressure too high	Reduce wing pressure (refer to page 32)
Machine 'bouncing' in work	Disc angle too great	Reduce disc angle (refer to page 24)

Space for Notes: