Great Plains

6-Foot No-Till Drills

OPERATOR MANUAL

MODELS 3P605NT, 3P606NT, 605NT & 606NT

25106

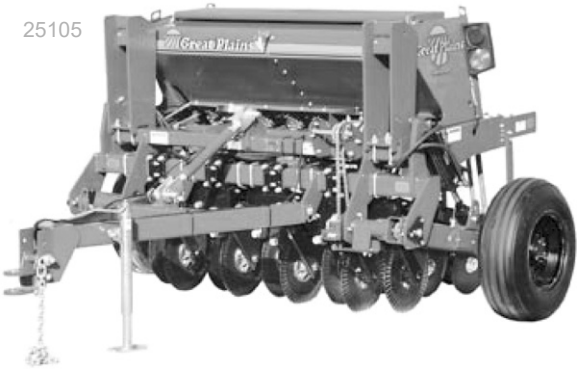

25105

Original Instructions 151-061M

Read the operator manual entirely. When you see this symbol, the subsequent instructions and warnings are serious - follow without exception. Your life and the lives of others depend on it!

Illustrations may show optional equipment not supplied with standard unit.

Great Plains
"Harvest Starts Here."

Machine Identification

Record your machine details in the log below. If you replace this manual, be sure to transfer this information to the new manual.

If you or the dealer have added options not originally ordered with the machine, or removed options that were originally ordered, the weights and measurements are no longer accurate for your machine. Update the record by adding the machine weight and measurements with the option(s) weight and measurements.

Model Number	
Serial Number	
Machine Height	
Machine Length	
Machine Width	
Machine Weight	
Year of Construction	
Delivery Date	
First Operation	
Accessories	_____ _____ _____

Dealer Contact Information

Name: _____

Street: _____

City/State: _____

Telephone: _____

Email: _____

Dealer's Customer No.: _____

⚠ WARNING: Cancer and Reproductive Harm - www.P65Warnings.ca.gov

To our customer:

Congratulations on the purchase of your Great Plains product. Great Plains welcomes you to its growing family of new product owners. Your product has been designed and built by skilled workers using quality materials.

Your dealer has performed the necessary pre-delivery service to your machine, and will advise you of the proper maintenance and operating practices that will give you long, satisfactory use of your machine. Do not hesitate to contact your dealer when you have a question related to your machine.

Your machine has been designed to run efficiently in most operating conditions, and will perform relative to the service it receives. If you need customer service or repair parts, contact your dealer who has trained personnel, repair parts, and equipment specially designed for Great Plains products.

Read this manual carefully before using the machine. It will familiarize you with safety, operation, adjustments, and maintenance of your new equipment. This manual must always be kept with your machine.

Great Plains wants you to be satisfied with your product. If for any reason you do not understand any part of this manual or are otherwise dissatisfied, please take the following actions first:

1. Discuss the matter with your dealership service manager. Make sure he is aware of any problems so he can assist you.
2. If you are still dissatisfied, seek out the owner or general manager of the dealership.

If your dealer is unable to resolve the problem or the issue is parts related, please contact:

Great Plains Service Department
1525 E. North St.
P.O. Box 5060
Salina, KS, USA 67402-5060

Printed 03/07/2024 | English

For permission requests, write to the publisher at the address below.

Great Plains Mfg.
1525 E. North St.
P.O. Box 5060
Salina, KS 67402

You can also visit our website at www.greatplainsag.com/en/manuals/905/product-manuals for a full catalog of this and other manuals.

Ordering Information:

Quantity sales. Special discounts are available on quantity purchases by corporations, associations, and others. For details, contact the publisher at the address above.

Orders for personal, non-commercial use. Please contact our service department by mail or our website www.greatplainsag.com.

Table of Contents

Introduction

Great Plains welcomes you to its growing family of new product owners. Your 6-Foot No-Till Drill has been designed with care and built by skilled workers using quality materials. Proper setup, maintenance, and safe operating practices will help you get years of satisfactory use from the machine.

■ Description of Unit

The 606NT towed seeding implement. This drill has a working width of 7.5 feet (1.9 m). The drill has straight arm, double disc 05 or 06 Series openers. The opener discs make a seed bed, and seed tubes mounted between the discs place seed in the furrow. Press wheels following the opener discs close the furrow and gauge opener seeding depth. A T-handle on the opener body makes seeding depth adjustments

3P606NT No-Till Drill 32704

The metering system is driven from the gauge wheel (3-point), or from the left end wheel (pull-type). Seeding rates are set by rate adjustment handles and a Drive Type gearbox for the main seed box.

Intended Usage

Use this implement to seed production-agriculture crops in conventional or minimum tillage applications.

Models Covered

This manual applies to drill models:

Standard 3P606NT or 606NT Models have a main seed box. Native Grass and/or Small Seeds capability may be added.

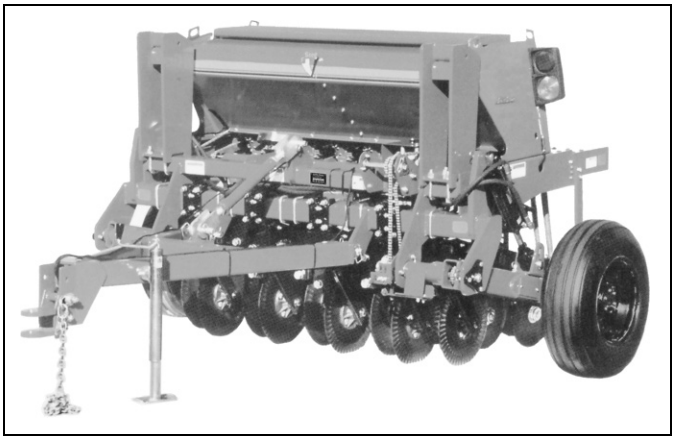

606NT No-Till Drill 32703

Document Family

Operator Manual (this document)
3P606NT, 606NT Parts Manual
Seed Rate Manual

Parts Manual QRC

The QR Code to the left will take you to this machine's parts manual. Use your smart phone or tablet to scan and start viewing.

606NT Product Manual QRC

The QR Code to the left will take you to Great Plains' catalog of product manuals. Use your smart phone or tablet to scan and start viewing.

3P606NT Product Manual QRC

The QR Code to the left will take you to Great Plains' catalog of product manuals. Use your smart phone or tablet to scan and start viewing.

Using This Manual

This manual familiarizes you with safety, assembly, operation, adjustments, troubleshooting, and maintenance. Read this manual and follow the recommendations to help ensure safe and efficient operation.

Right-hand and left-hand as used in this manual are determined by facing the direction the machine will travel while in use unless otherwise stated. An orientation rose in some line art illustrations shows the directions of: Up, Back, Left, Down, Front, Right.

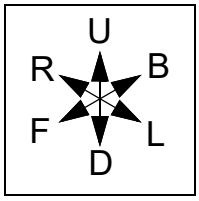

Identifies an Economic (not a Safety) Risk: NOTICE provides a crucial point of information related to the current topic. Read and follow the instructions to avoid damage to equipment and ensure desired field results.

This form sets off useful information related to the current topic, or forestalls possible misunderstanding.

The information in this manual is current at printing. Some parts may change to assure top performance.

Owner Assistance

If you need customer service or repair parts, contact a Great Plains dealer. They have trained personnel, repair parts and equipment specially designed for products.

Your machine's parts were specially designed and should only be replaced with Great Plains parts. Always use the serial and model number when ordering parts from your Great Plains dealer. The serial-number plate is located on the upper front frame tube, just left of center.

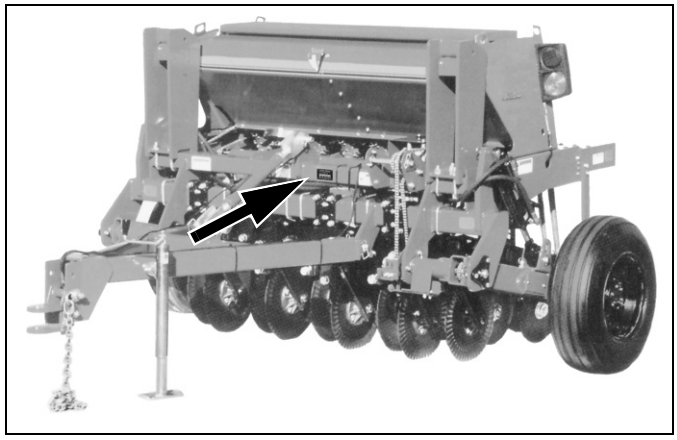

Serial Number Location, 606NT 32703

Record your drill model and serial number here for quick reference:

Model Number:_____

Serial Number: _____

Your Great Plains dealer wants you to be satisfied with your new machine. If you do not understand any part of this manual or are not satisfied with the service received, please take the following actions.

1. Discuss the matter with your dealership service manager. Make sure they are aware of any problems so they can assist you.
2. If you are still unsatisfied, seek out the owner or general manager of the dealership.

For further assistance write to:

Product Support

PO Box 5060
Salina, KS 67402-5060

Safety Information

■ Safety Symbols and Signal Words

Observe Safety and Informational Symbols

Throughout this manual you will see the following safety and informational symbols. They indicate safety hazards, machine hazards, or information to improve operation. Read the instructions carefully whenever you see any of these symbols:

The safety symbol indicates a potential safety hazard to persons operating or near the machine and advises on how to avoid it.

The notice symbol indicates a potential for machine or property damage from operator error and advises on how to avoid misuse.

The information symbol indicates useful - but not crucial - information for machine operation, assembly, or adjustment.

Be Aware of Signal Words

Some decals are accompanied by a signal word. Signal words indicate the seriousness of a potential hazard. These signal words are:

DANGER

DANGER indicates an imminent hazard which, if not avoided, will result in death or serious injury. This signal word is limited to the most serious situations, typically for unguarded machine components.

WARNING

WARNING indicates a potential hazard which, if not avoided, could result in death or serious injury including hazards that are exposed when guards are removed. It also alerts against unsafe practices.

CAUTION

CAUTION indicates a potential hazard, which if not avoided, may result in minor or moderate injury. It also alerts against unsafe practices.

■ Before Getting Started

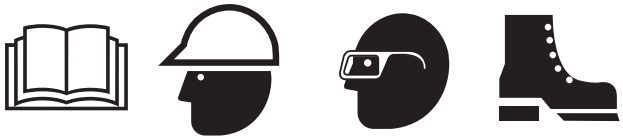

Read Machine Information

- Read this manual in its entirety before attempting to start and operate the machine. Do not let anyone operate machine without proper instruction.
- Non-Great Plains components on this machine may contain additional safety information not found in this manual. Consult the manufacturer's safety information and product decals to safely use products from third-parties.

Wear Appropriate Clothing and Equipment

- Never wear loose clothing around machine. Always wear appropriate clothing and equipment such as hard hats, gloves, face masks, eye protection, and work or steel-toed boots as needed.
- Prolonged exposure to machine noise during operation can cause hearing impairment or loss. Use proper hearing protection like earmuffs or earplugs while working.

Inspect Machine Before Use

- Inspect brakes, link pins, and other mechanical parts for wear and dirt buildup, and check that all guards and shields are undamaged, installed, and secure before operating machine.
- Check that hydraulic fittings are tight and all hydraulic hoses and lines are in good working condition before applying pressure to the system.
- Do not modify the machine. Unauthorized modification can result in unsafe conditions that lead to machine damage or personal injury.

Machine Use

Operate Responsibly

- Maintain attention on operation at all times to avoid injury to yourself or others.
- Do not operate machine while distracted by a smart phone, tablet, or similar electronic device, or while impaired by alcohol, medication, any controlled substance, or while fatigued.
- Do not ever allow passengers to ride on any part of the machine at any time, for any reason.

Handle Hydraulics with Care

- Keep clear of machine while hydraulics are in use. Any failure in the hydraulic system can cause machine parts to move or fall rapidly with a great deal of force. Anyone struck, caught between, or crushed beneath these parts can suffer serious injury or even death.
- A raised planter without cylinder locks installed or without active hydraulic pressure will slowly lower over time. Use tractor hydraulics to raise planter only for brief periods, such as field turns and cylinder lock installation.
- Relieve hydraulic pressure and wait for all parts to come to a complete stop before disconnecting any hydraulic lines or performing any work on the hydraulic system.
- Do not have skin exposed when searching for leaks in hydraulic lines. Use a piece of cardboard or wood to locate leaks. If injured by escaping hydraulic fluid, seek immediate medical attention.
- Wear protective gloves and eye protection when working on the machine's hydraulic system.

Avoid Potential Collision Damage

- Watch your surroundings at all times. Do not operate with nearby bystanders or while anyone makes adjustments or fills the machine.
- Avoid contacting overhead obstructions such as low bridges, overpasses, and power lines.
- Do not operate near ditches, holes, steep slopes, embankments, or other surfaces which may collapse under the machine's weight or tip the machine over.

Chemicals and Waste

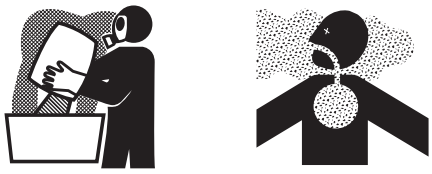

Agricultural chemicals can be dangerous. Improper use can seriously injure persons, animals, plants, soil and property.

- Read chemical manufacturer's instructions carefully, and then take appropriate precautions before use. In the absence of manufacturer instructions, chemical labels will inform you of any potential hazards and their severity.
- Wear protective clothing and as well as any other personal protective equipment.
- Wash hands and face before eating after working with chemicals. Shower as soon as application is completed for the day.
- Apply only with acceptable wind conditions. Make sure wind drift of chemicals will not affect any surrounding land, people or animals.
- Dispose of unused chemicals and chemical waste as specified by the manufacturer. Observe all the local ordinances and regulations in your area.

Dispose of Waste Properly

- Dispose of waste properly to avoid threatening the environment and ecology. Potential harmful waste includes oil, fuel, filters, and batteries.
- Use a leak-proof container for draining fluids. Do not use a food or beverage container that may be mistaken for a consumable product.
- Do not drain or pour waste onto the ground, down a drain, or into any water source.
- Contact your local environmental or recycling center for the proper way to recycle or dispose of waste.

Machine Maintenance

Follow Tire Recommendations

- Consult the tire manufacturer's recommendations for maintenance and replacement of your machine's tires. Only use prescribed tire sizes with correct ratings and tire pressure.
- Replacing tires is potentially hazardous. Have a trained professional change the machine's tires with the proper tools and equipment.
- Avoid over inflation of tires and over torquing wheel bolts. Review the machine specifications and tire information in this manual first before doing any work on the tires of your machine.

Prepare for Performing Maintenance

- Understand procedure before performing any work. Always use proper tools and equipment.
- Only work on or around the machine if frame is lowered, or raised with the cylinder locks in place.
- Lower the implement. Put tractor in Park, turn off engine. To prevent unauthorized starting, remove key before performing maintenance or service work.
- If work must be performed with wings raised, set the wing tilt locks to the road position.
- Disconnect electronic monitor and lighting harness from the tractor before servicing or adjusting electrical systems.
- Check and replace worn brake lines as needed.
- Remove all tools and unused parts from implement before operation.

PTO

- Wait until all moving components have completely stopped before adjusting, cleaning, or servicing any PTO driven equipment.
- When operating stationary PTO driven equipment, always apply the parking brake and place chocks behind wheels.
- Stay clear of and never step over any rotating parts.

Machine Transport

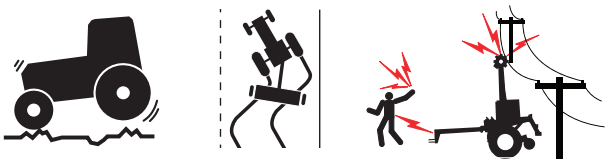

- This machine does not meet all local, regional, or national regulations for transport on a public road. Know and comply with your local laws and regulations before transporting your machine.
- Transport only at recommended transport speed. Further reduce speed when turning.
- Before towing implement on roads, empty out all material from hoppers or boxes. Implement should never weigh more than 1.5 times the weight of towing vehicle.
- Know transport height and width of implement to avoid collision.
- Do not engage any hydraulic functions while machine is in transport.

Use Safety Lights and Devices

- Inspect safety chain and chain load rating before use with machine. Never use the safety chain for towing. Replace chain if any links or end fittings are broken, stretched, or otherwise damaged.
- Always use safety lights and devices when transporting and operating the machine. If equipped, use flashing warning lights and turn signals whenever driving on public roads.
- Regularly inspect safety lights, signs, and devices to ensure that they are clean and visible from either end of the machine.

Shutdown and Storage

- Park the tractor and implement on a solid, level surface devoid of bystanders.
- Fold and tilt wings up.
- Put tractor in park or set the parking brake. Turn off engine and remove key from ignition.
- Turn lockout valve and wing lock levers to locked position to prevent the wings from lowering.
- Detach the tractor. Secure the implement using blocks.

Safety Decals

Your implement comes equipped with safety reflectors and decals in place.

Read and follow decal directions. Keep all safety decals clean and legible. Replace all damaged, faded, or missing decals.

Order new decals from your Great Plains dealer. Refer to this section for proper decal placement.

When ordering new parts or components, also request corresponding safety decals.

To install new decals:

Clean the area on which the decal is to be placed.

Peel backing from decal. Press firmly on surface, being careful not to cause air bubbles under decal.

Safety Reflectors and Decals

Your implement comes equipped with all lights, safety reflectors and decals in place. They were designed to help you safely operate your implement.

- Read and follow decal directions.
- Keep lights in operating condition.
- Keep all safety decals clean and legible.
- Replace all damaged or missing decals. Order new decals from your Great Plains dealer. Refer to this section for proper decal placement.
- When ordering new parts or components, also request corresponding safety decals.

To install new decals:

1. Clean the area on which the decal is to be placed.
2. Peel backing from decal. Press firmly on surface, being careful not to cause air bubbles under decal.

Reflector: Slow Moving Vehicle (SMV)

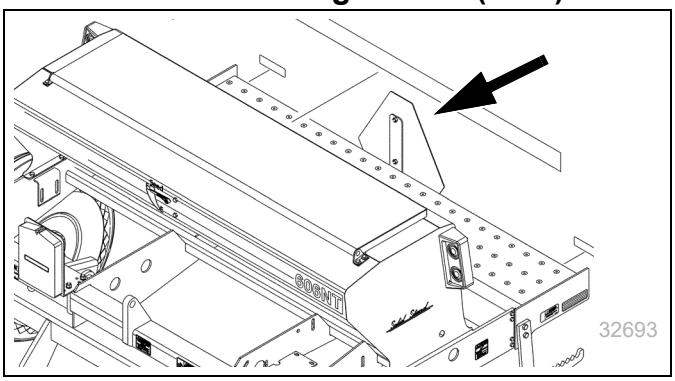

818-055C

At center of walkboard; 1 total

See transport topic on page 18 or page 19.

Reflectors: Red

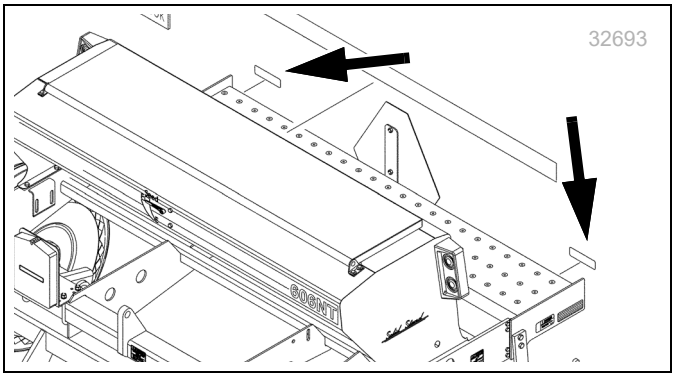

838-266C

On rear face of walkboard, left and right ends; 2 total

See transport topic on page 18 or page 19.

Reflectors: Amber

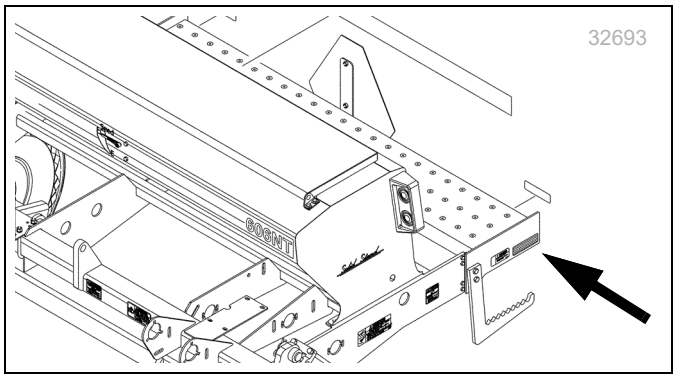

838-266C

On side frames at walkboard ends; 2 total

See transport topic on page 18 or page 19.

Reflectors: Amber (With Weights Option)

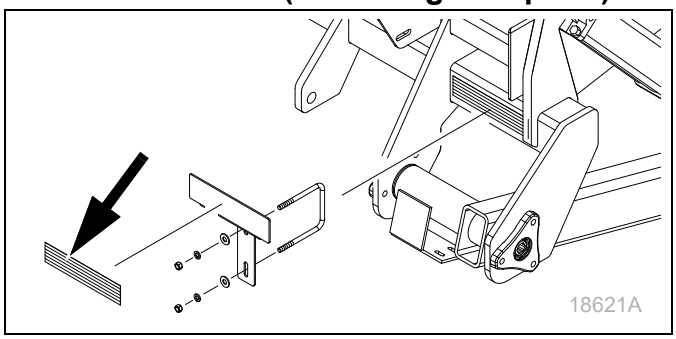

838-266C

On decal mounts attached to top front tool bar; 2 total

See transport topic on page 18 or page 19.

Danger: Hitch Crush

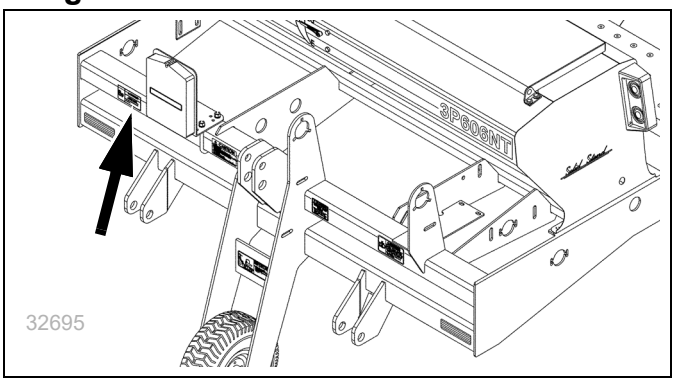

818-590C

(3P606NT only)

Front face, each end of top front tool bar; 2 total

Danger: Moving Chain (Option)

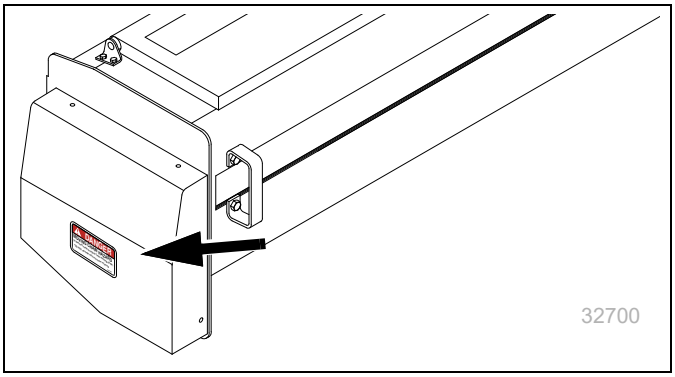

818-518C

(optional Native Grass box)

On chain guard of Native Grass option box (left end); 1 total

Danger: Possible Chemical Hazard (Option)

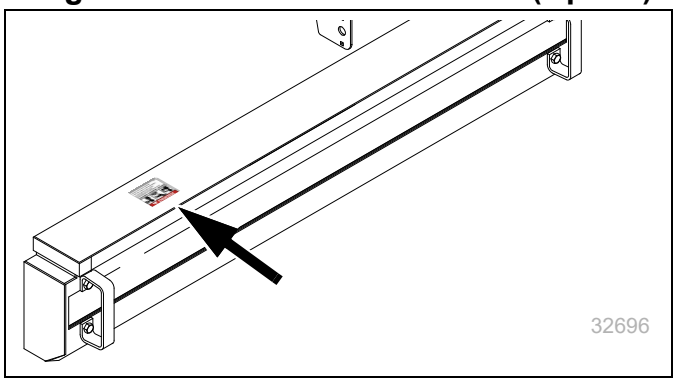

838-467C

(with Small Seeds Option only)

Under lid; 1 total

Warning: Moving Parts (standard)

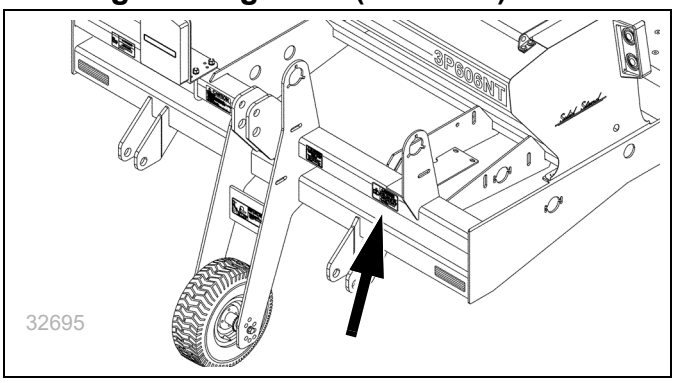

818-860C

On front face, upper front frame tube, below gearbox; 1 total

Warning: Speed

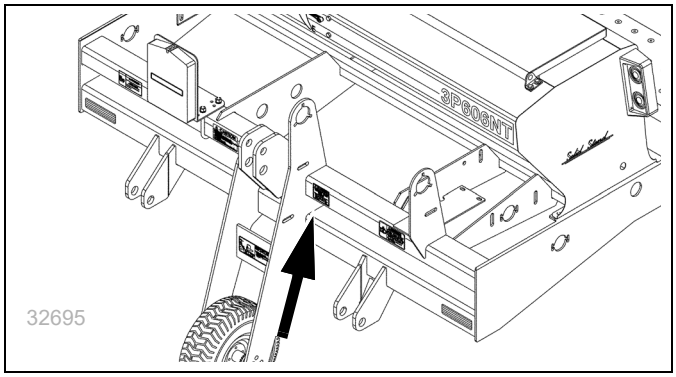

818-337C

On front face, upper front frame tube, left of center; 1 total

See transport topic on page 18 or page 19.

Warning: Moving Parts (Option)

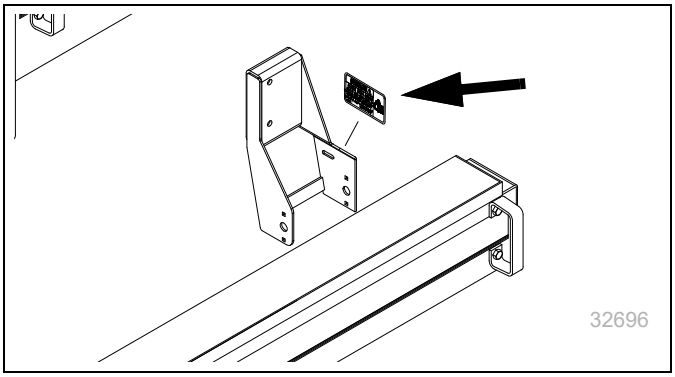

818-860C

(with Small Seeds Option only)

On front face, upper front frame tube, below gearbox; 1 total

Warning: High Pressure Fluid

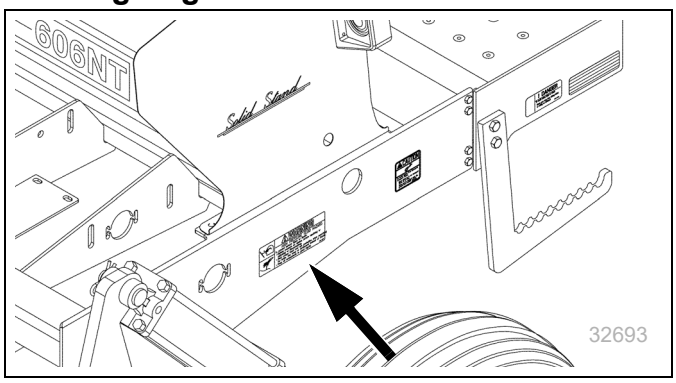

838-094C

(606NT only)

On side frames, near cylinder; 2 total

Warning: Falling Hazard

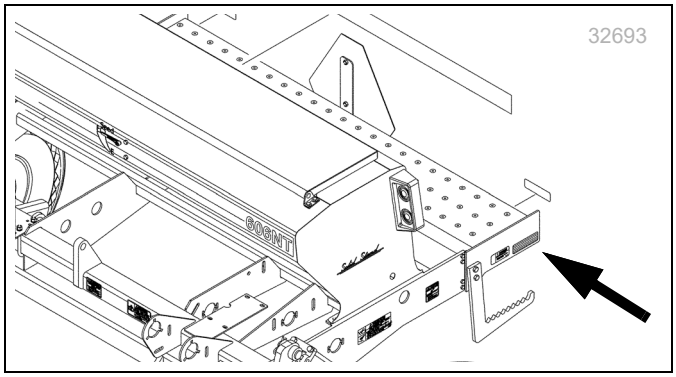

838-102C

On side frames at walkboard ends; 2 total

See “**Loading Seed**” on page 22.

Warning: Clevis Adjustment

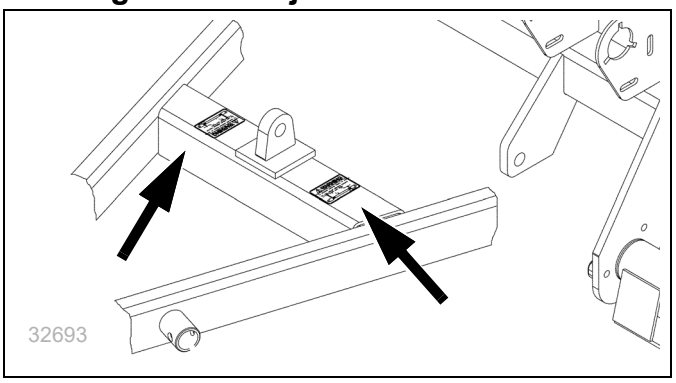

838-406C

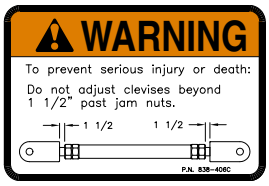

(606NT only)

On tongue cross-tube near turnbuckle; 2 total

See “**Height and Leveling the Drill**” on page 14.

Warning: Crushing (Option)

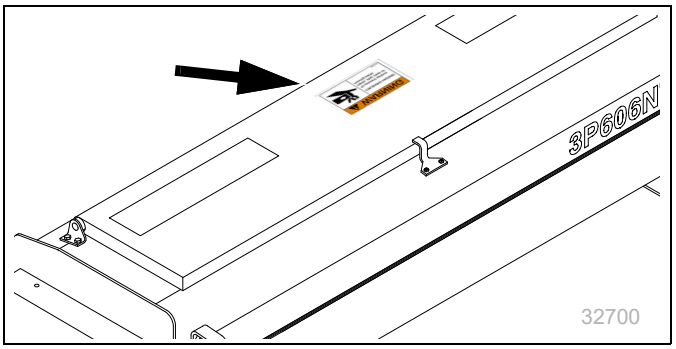

838-611C

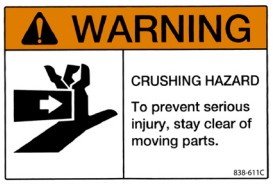

(optional Native Grass box)

On underside of lid; 1 total

Caution: Tires Not A Step

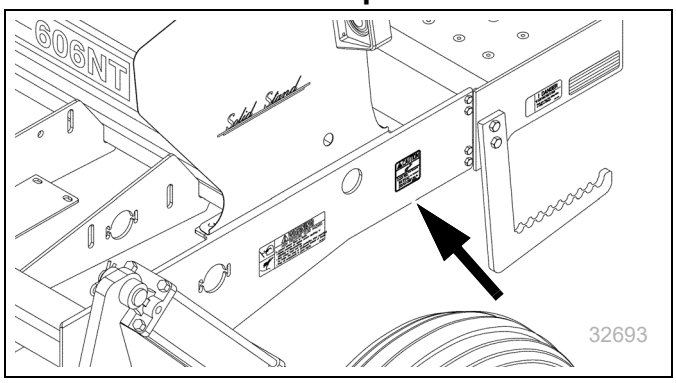

818-398C

(606NT only)

On side frames above tires; 2 total

Tires may be in light contact with ground, or off the ground, when the drill is lowered.

Caution: General

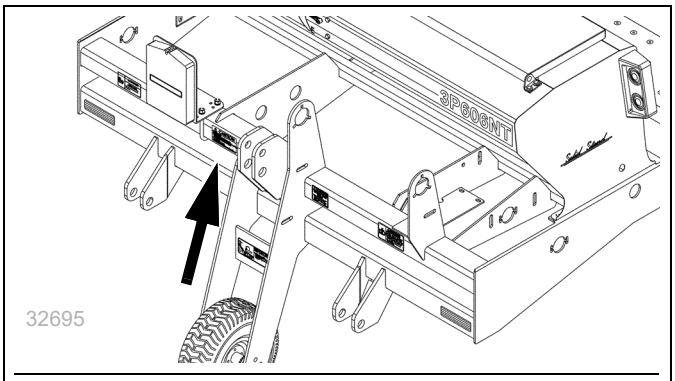

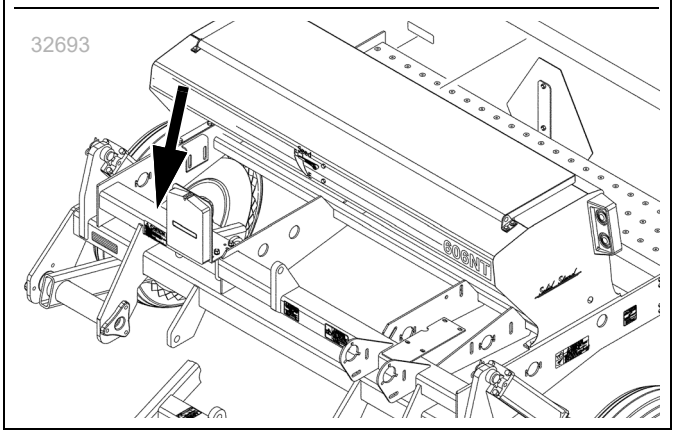

818-719C

3P606NT: On front face, upper front frame tube, right of center; 1 total

606NT: On front face, upper front frame tube, right end;

See "**Safety Information**" on page 3.

Caution: Tire Pressure and Torque

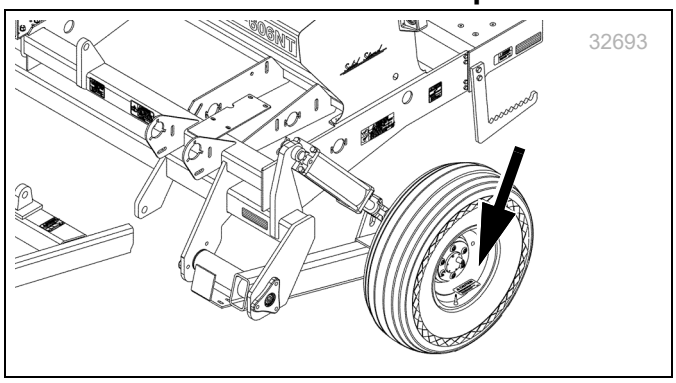

848-021C

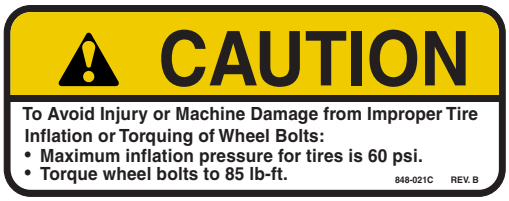

(606NT only) On rim of each end wheel with 700-15 LT tires; 2 total

NOTICE: Petroleum Products

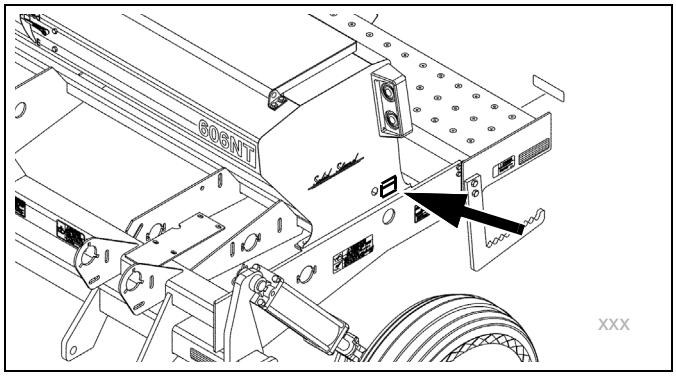

858-679C

(3P6006NT and 606NT only) On the left-hand ends of each seed box; 1 per seed box

Preparation and Setup

This section helps you prepare your tractor and drill for use. Before using the drill in the field, you must hitch the drill to a suitable tractor and also setup the drill.

■ Pre-Setup Checklist

1. Verify that dealer pre-delivery is complete (page 69) and optional accessories are installed (page 72).
2. Read and understand "**Safety Information**" on page 3.
3. Check that all working parts are moving freely, bolts are tight, and cotter pins are spread.
4. Check that all grease fittings are in place and lubricated. See "**Lubrication and Scheduled Maintenance**" on page 43.
5. Check that all safety decals and reflectors are correctly located and legible. Replace if damaged. See "**Safety Information**" on page 3.
6. Inflate tires and tighten wheel bolts as at "**Tire Information**" on page 56 and, "**Torque Values Chart**" on page 57

■ Hitching Tractor to Drill

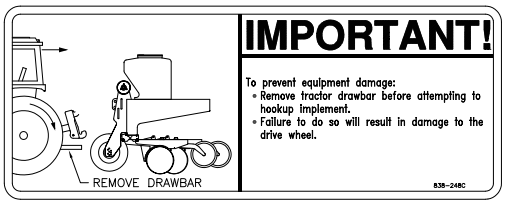

Equipment Damage Risk:

Due to interference with the gauge wheel assembly, drill models 3P606NT are not compatible with Great Plains accessory hitches CPH, PFH and SSH, nor with the hitch set-back kit.

Hitching Model 3P606NT

Crushing Hazard:

DANGER

You may be severely injured or killed by being crushed between the tractor and drill. Do not stand or place any part of your body between drill and moving tractor. Stop tractor engine and set park brake before installing the hitch pin.

Certain Machine Damage:

Remove tractor draw bar before hitching the 3P606NT. The drill drive wheel will be damaged if drawbar is not removed.

1. Raise or lower tractor 3-point arms as needed and pin lower arms to drill.
2. Pin upper arm to drill.
3. Slowly raise drill. Watch for cab interference.
4. Adjust top 3-point link so the top edge of drill box is parallel with the ground when drilling.

Do not use link to adjust opener depth. For opener adjustments, refer to "**Opener Depth (Press Wheel**

Height)" on page 38. Set your tractor 3-point draft control to Float position for planting.

Hitching Model 606NT

Crushing Hazard:

You may be severely injured or killed by being crushed between the tractor and drill. Do not stand or place any part of your body between drill and moving tractor. Stop tractor engine and set park brake before installing the hitch pin.

1. With drill lowered in field position and tongue jack mounted as shown in , raise or lower tongue jack to level drill tongue.
2. With drill tongue level, adjust drill hitch on drill tongue to match your tractor-drawbar height. You can move the hitch up or down or turn it over for a total of four different hitch heights.

Jack in Parking Position 18473

When hitching drill to a different tractor, check for a difference in drawbar heights. If heights are different, readjust hitch height accordingly.

3. When drill hitch matches tractor-drawbar height, hitch drill to tractor.
4. Securely attach drill safety chain to an anchor on tractor capable of pulling drill.

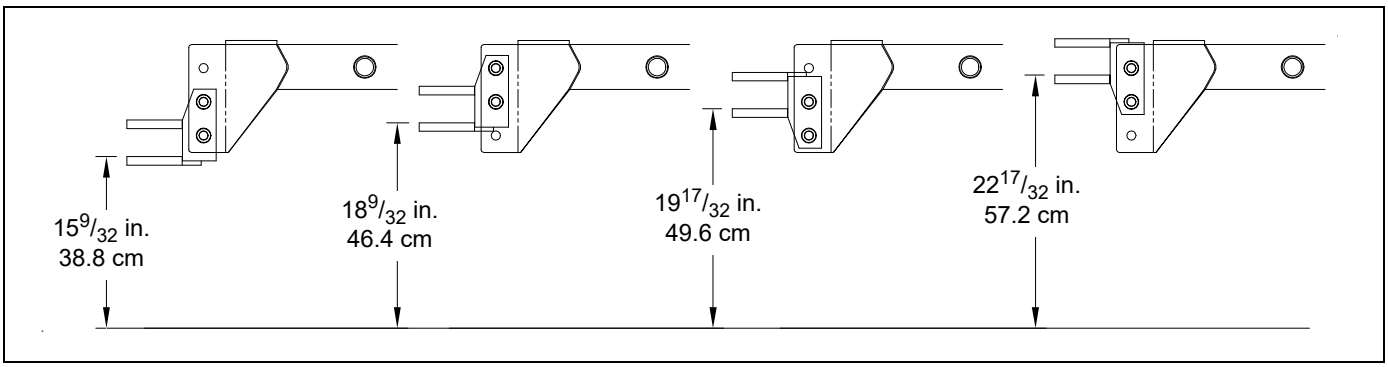

Clevis Hitch Height Adjustment 18544

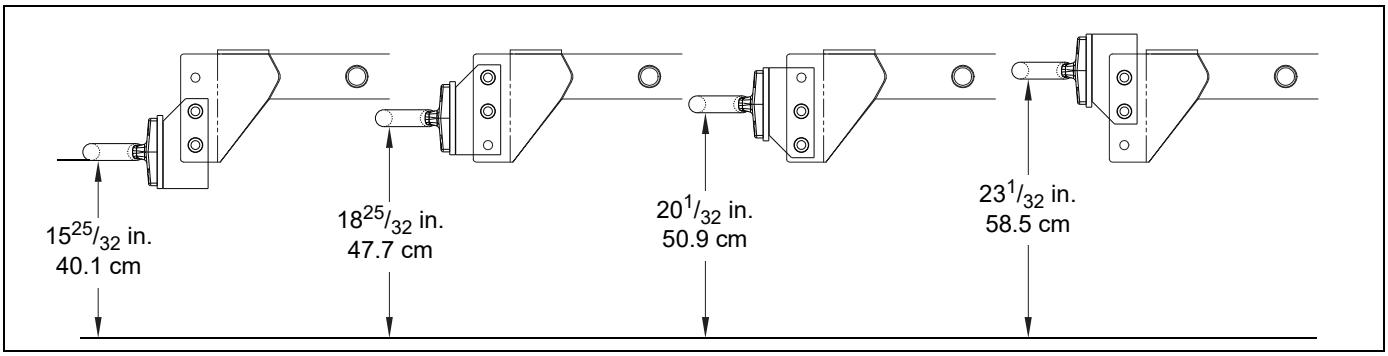

Pintle Hitch Height Adjustment 27216

Hydraulic Hose Hookup (606NT)

High Pressure Fluid Hazard:

Shut down tractor before making hydraulic connections. Only trained personnel should work with system hydraulics. Escaping fluid under pressure can have sufficient pressure to penetrate the skin causing serious injury. Use paper or cardboard, NOT BODY PARTS, to check for leaks. Wear protective gloves and safety glasses or goggles when working with hydraulic systems. If an accident occurs, seek immediate medical assistance from a physician familiar with this type of injury.

Hydraulic hoses have directional handles and are color coded to help you hookup hoses to your tractor outlets. Hoses that go to the same remote valve pair are marked with the same color.

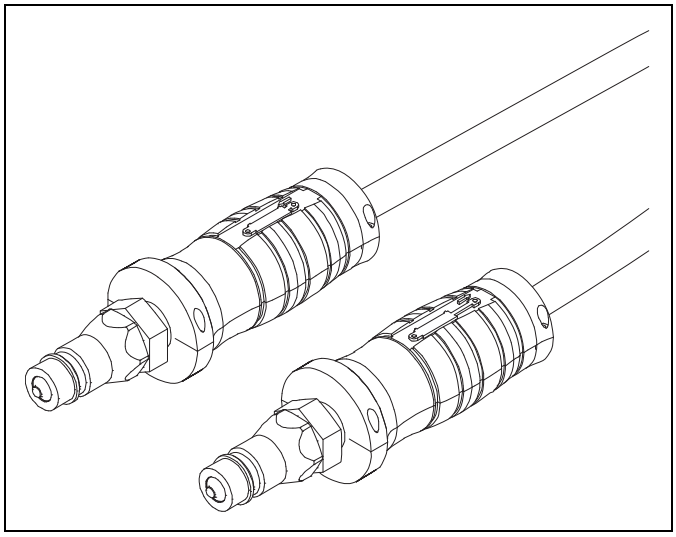

Hose Handles 31733

Color	Hydraulic Function
Blue	Transport Lift Cylinders

To distinguish hoses on the same hydraulic circuit, refer to the symbols on the handles. Hose under extended-cylinder symbol feeds cylinder base ends. Hose under retracted-cylinder symbol feeds cylinder rod ends.

■ Electrical Connections

5. Plug drill electrical lead into tractor seven-pin connector. If your tractor is not equipped with a seven-pin connector, contact your dealer for installation.

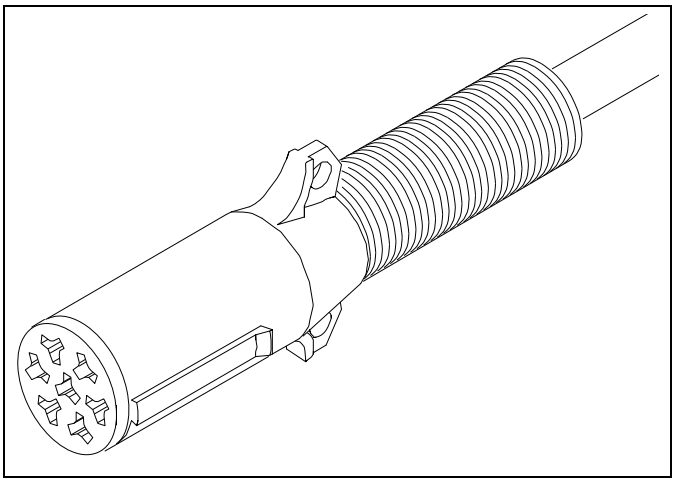

Lighting Connector 26467

■ Height and Leveling the Drill

Height Setup: Model 3P606NT

1. Initially adjust drill so opener tool bar runs $24^3/_4$ in. (62.9 cm) above ground when drill is lowered in the field.

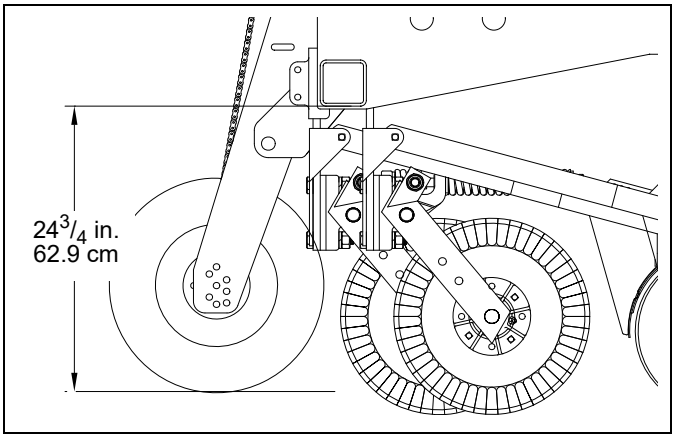

Initial Field Height, 3P606NT 18546

2. The drive wheel should be in the fourth mounting hole from the top (factory setting).

The drive may need to be adjusted due to ground conditions.

3. Level drill with top 3-point link.

Adjusting 3-Point Height

Raising the gauge wheel spindle provides deeper coulter depth. Lowering the wheel provides shallower depth.

Do not lower coulters to aid in penetrating hard soil. Instead, increase coulter down-force (page 30). This may require adding optional weight (page 32).

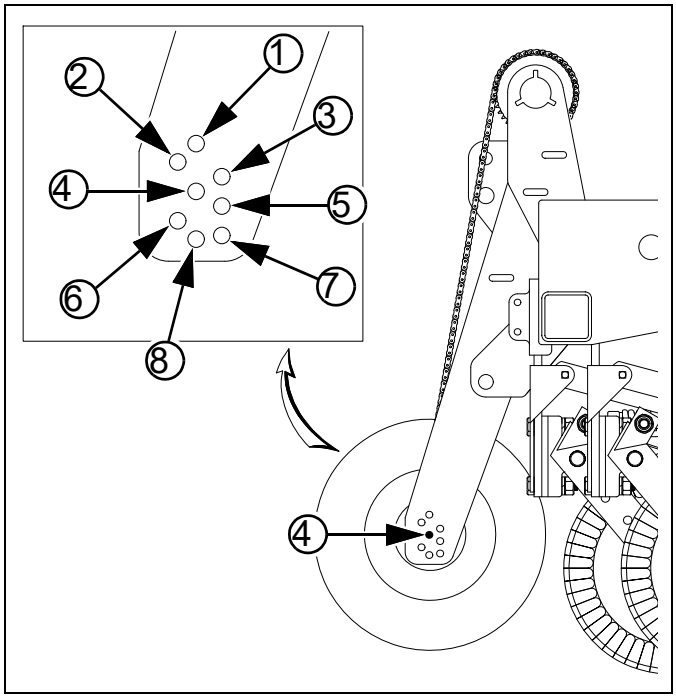

Height Adjustment, 3P606NT 18509

1. Determine new coulter depth desired. With new discs, the axle holes provide these depths:

Hole No. (from top)	Coulter Depth (n) Inches	mm
1	3 1/ 2 in.	89 mm
2	2 7/ 8 in.	73 mm
3	2 3/ 8 in.	60 mm
4 (f)	1 7/ 8 in.	48 mm
5	1 3/ 8 in.	35 mm
6	7/ 8 in.	22 mm
7	3/ 8 in.	10 mm
8	1/ 4 in.	6 mm

f. Factory setting. 32774G

n. Depth is with new coulter blades.

2. Raise drill, unless wheel is already off ground sufficiently to allow wheel spindle relocation.
3. Relax chain idlers.
4. Remove wheel bolts. Move spindle to new hole pair. Re-install wheel bolts.
5. Re-engage chain idlers.

Height Setup: Model 606NT

Set Tool Bar Height

Tool bar height ① is controlled by a depth stop assembly ② on the left lift cylinder.

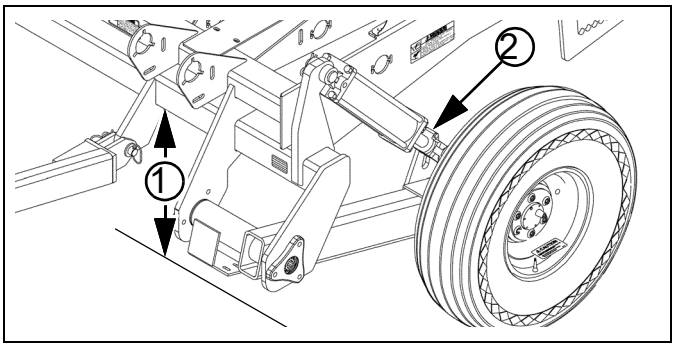

Pull-Type Tool Bar Height 32681

Field Results Risk:

Prior to first use, check tool bar height ① or the drill may run too deep. Model 606NT drills may be shipped with the depth stop valve actuator ② set to maximum depth. The actuator must be adjusted to desired opener height prior to first use.

The suggested initial tool bar operating height is: ① $24^3/_4$ in. (62.9 cm) from the base of the opener tool bar to the ground, when lowered in field conditions (opener discs in ground).

1. Use the tractor remote circuit to raise the drill to the full extension of both lift cylinders. Hold the drill raised for several seconds to re-phase the cylinders. Remove any transport locks.
2. In field conditions, lower the drill to the desired tool bar height. Pull forward to put openers in ground. Set the remote to Neutral. Shut off the tractor.

3. Loosen the nut and bolt ③ that secure the stop weldment ④ to the cylinder rod.

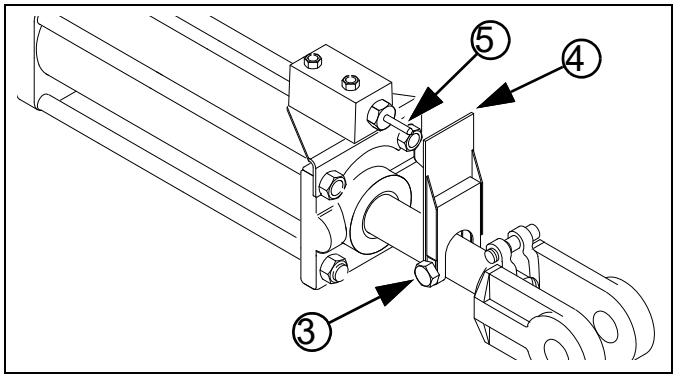

Cylinder Depth Stop 32712

4. Slide the weldment up the rod until it contacts the valve actuator ⑤, then slide it up another $^{1}/_{8}$ in. (3 mm). Tighten the bolt.
5. Start the tractor. Raise and lower the drill. Pull forward in ground. The lowering stops when the weldment moves the actuator a short distance. Shut off the tractor and verify the tool bar height.

- If further adjustment is required, the drill height changes at approximately half the change in weldment position. For example, raising the drill another $^{1}/_{8}$ in. (3 mm) would require moving the weldment up another $^{1}/_{4}$ in. (6 mm).

Level Model 606NT

1. Use hitch turnbuckle ⑥ to level drill.

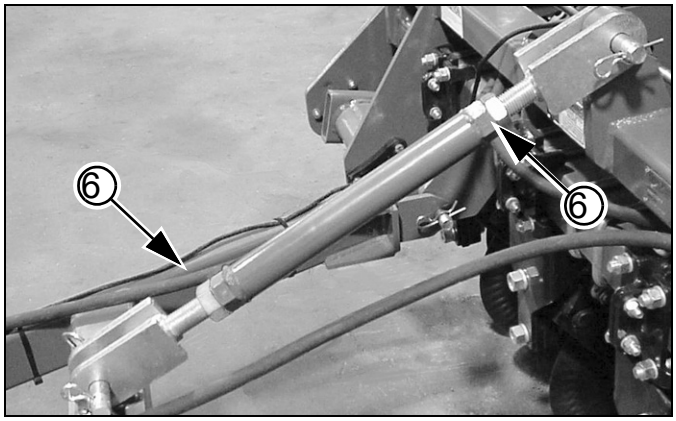

Pull-Type Turnbuckles 18513

2. Lower unit to take weight off of drill. Do not adjust with unit in raised position.
3. Loosen jam nuts on hitch turnbuckle.
4. Turn turnbuckle to shorten or lengthen until top of drill frame is parallel to the ground being careful not to extend clevises beyond turnbuckle.
5. Righten jam nuts on turnbuckle.

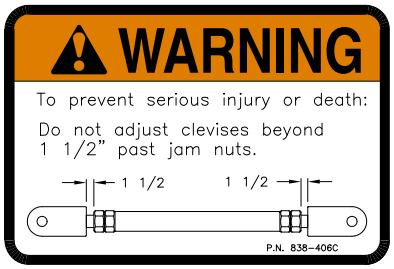

Operation

This section covers general operating procedures. Experience, machine familiarity and the following information will lead to efficient operation and good working habits. Always operate farm machinery with safety in mind.

■ Pre-Start Checklist

WARNING

High Pressure Fluid Hazard:

Escaping fluid under pressure can have sufficient pressure to penetrate the skin. Check all hydraulic lines and fittings before applying pressure. Fluid escaping from a very small hole can be almost invisible. Use paper or cardboard, not body parts, and wear heavy gloves to check for suspected leaks. If an accident occurs, seek immediate medical assistance from a physician familiar with this type of injury.

1. Carefully read "**Safety Information**" starting on page 3.
2. Lubricate drill per "**Lubrication and Scheduled Maintenance**" starting on page 43.
3. Check all tires for proper inflation. See "**Tire Information**" on page 56.
4. Check all bolts, pins and fasteners. See "**Torque Values Chart**" on page 57.
5. Check drill for worn or damaged parts. Repair or replace faulty parts before going to the field.
6. Check hydraulic hoses, fittings and cylinders for leaks. Repair or replace faulty parts before going to the field.

Rotate both drive wheel to verify that the drive and meters are working properly and free from foreign material.

WARNING

Falling Hazard:

Watch your step when walking on drill steps and walkboard. Falling from drill could cause severe injury or death.

Transporting 3P606NT

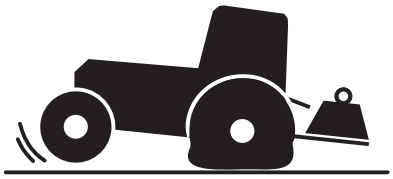

Transport considerations are different for 3-point and pull-type models. For pull-type, see page 22.

Use an Adequate Tractor (3-Point)

DANGER

Loss of Control Hazard:

Insufficient weight on tractor steering tires can dangerously reduce steering authority, particularly during acceleration and ascending hills. You can lose directional control entirely, which could result in a major accident, serious injury, or death. Adding too much ballast could lead to brake or other mechanical failures, tire failures and loss of control.

- Ensure that the tractor is rated for, and correctly ballasted for the drill's 3-point loading. Check that drill plus ballast does not exceed the tractor's capability.
- If the drill has accessory weight brackets, consider moving any tractor weights present to the tractor during transport.
- Avoid transport with material loaded in boxes.

The total drill weight and center of gravity vary considerably with drill configuration and material load. See table below.

3P606NT Example Weights

3-Point Drill Configuration	Typical Weights		
	Boxes Empty	Seed Loaded	Seed + Weights*
Standard Drill (Main Seed only)	2280 lbs 1030 kg	3000 lbs 1360 kg	3780 lbs 1710 kg
Drill with Native Grass option	2580 lbs 1170 kg	3300 lbs 1500 kg	4080 lbs 1850 kg
Drill with Small Seeds option	2430 lbs 1100 kg	3150 lbs 1430 kg	3930 lbs 1780 kg
Drill with Native Grass & Small Seeds	2730 lbs 1240 kg	3450 lbs 1560 kg	4230 lbs 1920 kg

*151-058A Weight Kit plus 6 each 100 pound tractor weights, approximately 780

32774C

Continue at " " on page 22.*

Transporting 606NT

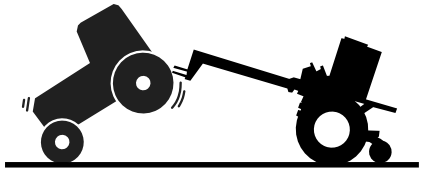

Transport considerations are different for 3-point and pull-type models. For 3-point, see page 18.

Use an Adequate Tractor (Pull-Type)

DANGER

Loss of Control Hazard:

Insufficient tractor weight can dangerously reduce steering authority, and increase braking loads beyond the capability of the tractor. You can lose directional control entirely, which could result in a major accident, serious injury, or death.

- Ensure that the tractor weighs at least $^{2}/_{3}$ (67%) of the drill (including the weight of any Options and materials).
- Avoid transport with material loaded in boxes.

The total drill weight varies considerably with drill configuration and material load. See table below.

606NT Example Weights

Pull-Type Drill Configuration	Typical Weights		
	Boxes Empty	Seed Loaded	Seed + Weights*
Standard Drill (Main Seed only)	2700 lbs 1220 kg	3420 lbs 1550 kg	4200 lbs 1910 kg
Drill with Native Grass option	3000 lbs 1360 kg	3720 lbs 1690 kg	4500 lbs 2040 kg
Drill with Small Seeds option	2850 lbs 1290 kg	3570 lbs 1620 kg	4350 lbs 1970 kg
Drill with Native Grass & Small Seeds	3100 lbs 1410 kg	3820 lbs 1730 kg	4600 lbs 2090 kg

*151-058A Weight Kit plus 6 each 100 pound tractor weights, approximately 780

32774D

Use Transport Locks

Transport Hazard:

Failure of hydraulic cylinders during transport causes drill to drop suddenly, which could lead to a serious accident, injury or death. To prevent an accident, always install cylinder locks before transporting drill.

Before transporting the drill, check these items:

Cylinder Locks

A cylinder lock ① is provided for both gauge wheel hydraulic lift cylinders.

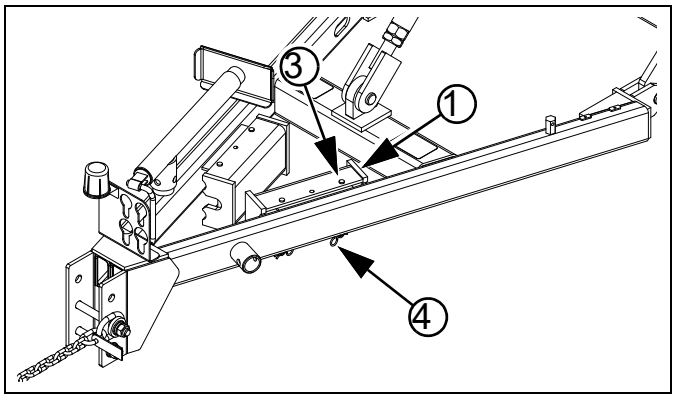

: 2012+ Lift Cylinder Lock Storage 36177

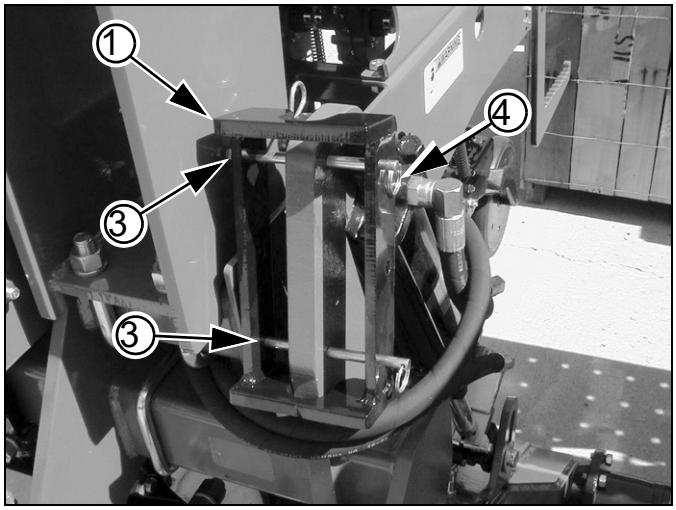

: 2011- Lift Cylinder Lock Storage 19653

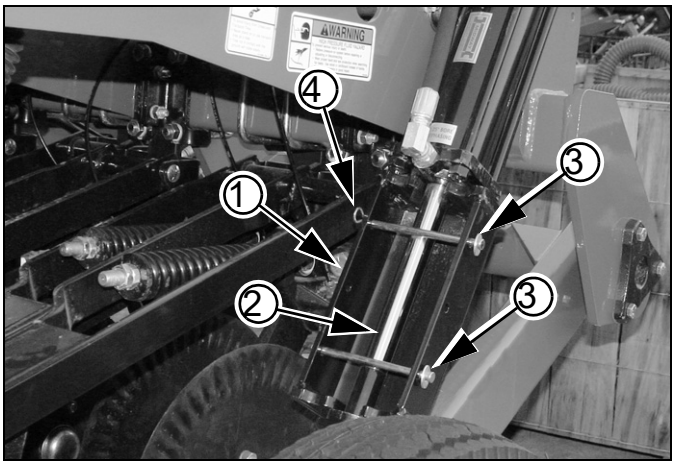

Lift Cylinder Lock (RH) 27217

1. Raise drill completely. Set circuit to Neutral.
2. Remove lock channels ① from storage locations.
3. Place lock channels over rod ② of cylinder.
4. Install cylinder lock pins ③ and retainer clips ④.

- The cylinder lock can be secured or removed only after the drill is fully raised.

5. Unload drill box. The drill can be transported with a full box of grain, but the added weight increases stopping distance and decreases maneuverability. Unload drill box before transporting if at all possible.

Disengage Lock-Out Hub

6. At lock-out on left hub, pull pin ⑤ away from wheel and rest in outer shallow detents ⑥.This disengages the hub from the drive train and prevents excessive wear of drive system during transport.

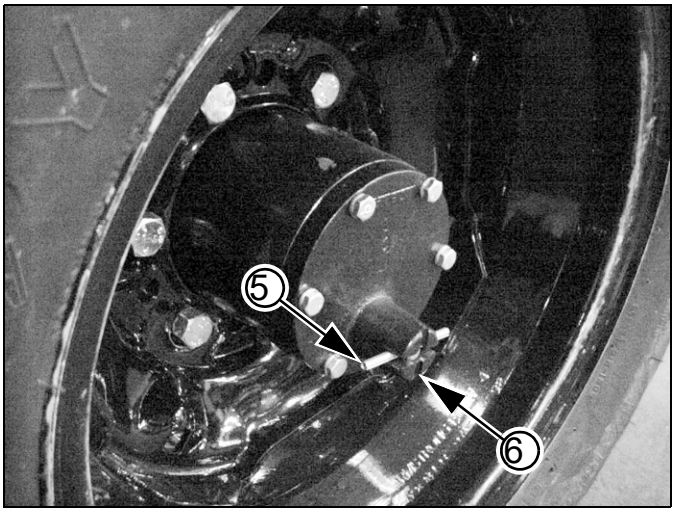

Lock-Out Hub Engaged 18480

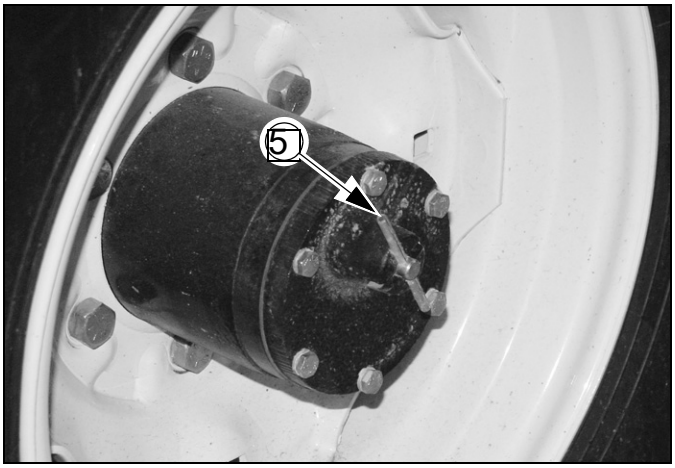

Lock-Out Hub Disengaged 27218

Transport Cautiously

Keep Clearance in Mind

Remember that the drill may be wider than the tractor. Allow safe clearance.

Observe Road Rules

Comply with all national, regional and local safety laws when traveling on public roads.

Reduce speed on rough roads.

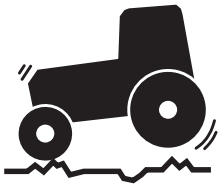

WARNING

Loss of Control Hazard:

Towing at high speeds or with a vehicle that is not heavy enough could lead to loss of vehicle control.

■ Loading Seed

WARNING

Possible Chemical Hazard:

Take all prescribed material safety precautions.

Fully loaded with dense seed, the drill weighs an additional 1155 lbs (529 kg). Include this weight when checking tractor capability.

The drill must be hitched for seed loading.

Load slightly more material than needed, because consumption rates can vary between compartments even though the furrow rates are identical.

① Main Seed Box Loading

1. Check that all meter doors are positioned for the seed size, and not set for clean-out. See "**Position Seed Cup Doors**" in seed Rate Manual. If loading prior to transport, set them to position 1 (smallest seed).
2. Install or remove optional seed plugs as desired for the row spacing planned. Refer to Seed Rate Manual.

If loading prior to transport, and calibration has not yet been done, set Seed Rate Handle to 0. At 0, and with the doors at 1, no seed can leak during transport.

3. The main seed box lid handle is also a latch. It needs to pivot up to release the lid.
4. Load seed evenly into compartments.

To reduce wear on unused boxes that may also be present:

- Remove final drive chain for Small Seed box.
- Remove any Native Grass chain.

② Loading Native Grass Box

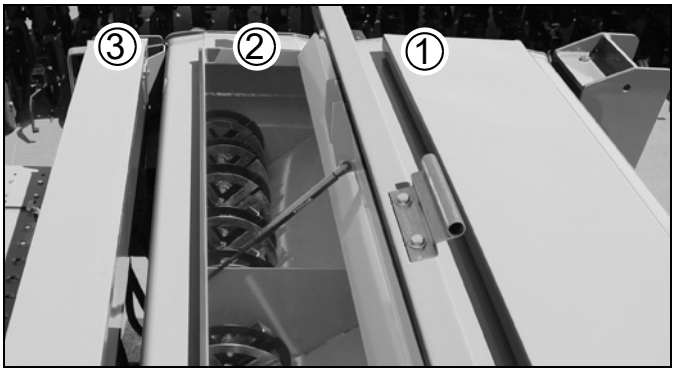

Native Grass Box Open 28362

1. The main seed box lid handle is also a latch. It needs to pivot up to release the lid.
2. Load seed evenly into compartments.
3. Add $^{1}/_{3}$ cup (80 mL) graphite seed lubricant on top of the loaded seed. In humid conditions, double or triple this amount as needed.

③ Loading Small Seeds Box

1. If loading prior to transport, and calibration has not yet been done, set Seed Rate Handle to 0. At 0, no seed can leak during transport.
2. Take all necessary materials safety precautions if the seed is treated.
3. The Small Seeds lid is held closed by two external rubber latches. Pull them up and to the rear to release the lid.
4. Load seed evenly into compartments.
5. To reduce wear, remove main shaft drive chains for main seed boxes.

Field Operation

1. Hitch drill to a suitable tractor (page 12).

For model 3P606NT, continue at step 5.

2. Raise drill. Hold at raised for several seconds to re-phase lift cylinders. Set circuit to Neutral. Shut off tractor.

Refer to page 20 and on page 20

3. Remove transport lock channels from cylinder rods. Move them to storage and re-pin. See page 20.

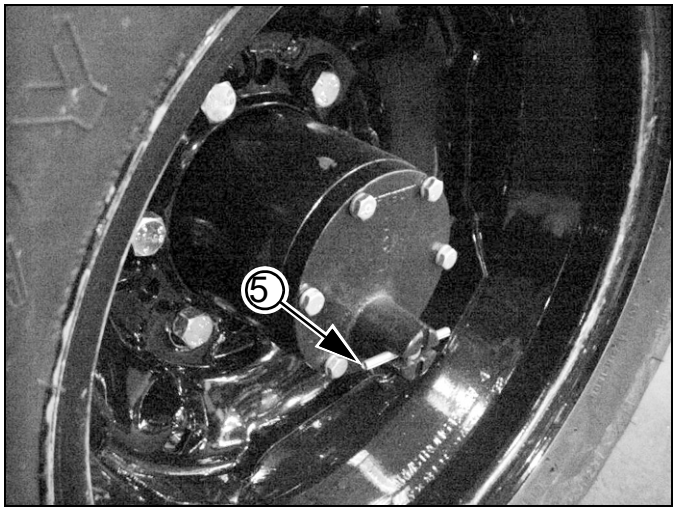

Lock-Out Hub Engaged 18480

Machine Damage Risk:

Never back up with openers in the ground. Seed tube and firmer damage is likely. Seed tube plugging is almost certain. Always raise the drill when stopped and prior to reversing.

4. Engage drive with lock-out hub on the left gauge wheel. Pull pin ⑤ away from hub. Rotate 90 degrees. Release into deeper notch pair.

- Pin may not seat fully immediately, but will at next drill movement.

5. Set seed population per rate chart and calibration, from Seed Rate manual.
6. Load box with clean seed.
7. Raise drill. Using calibration crank or 3-point gauge wheel, operate the meter drive system. Check that feed cups, seed tubes and drives are working properly and free from foreign material by looking for seed flow under each opener.
8. Lower drill. With a 3-point model, set hitch to Float.
9. Pull forward. Stop. Check tool bar height and opener depth.
10. Begin seeding.
11. Always lift drill out of the ground when turning at row ends and for other short-radius turns. Seeding stops automatically as drill is raised.

Re-Phasing Cylinders

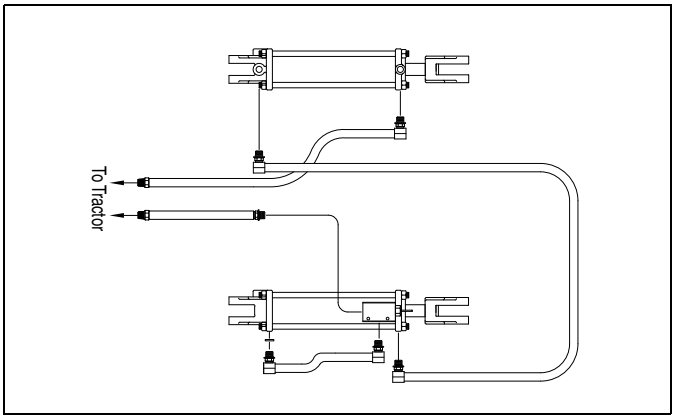

606NT Lift Hydraulics 18676

The lift cylinders may, after a period of time, get out of time or phase. The effects of this can be seen when one side of the drill is running too low or too high because its lift cylinder is either over extended or not retracted compared to the other lift cylinder.

To re-phase the cylinders, raise drill completely and hold tractor hydraulic lever on for a few seconds to give cylinders time to re-phase.

Each time drill is raised out of ground momentarily reverse hydraulic lever immediately after re-phasing to allow cylinders to retract about $^1/_2$ in. (2.5 cm). This helps maintain a level drill.

- Having cylinders become gradually out of time is different than having air trapped in the system, a problem remedied by bleeding (page 41).

Acremeter Operation

A battery-operated electronic acremeter is supplied with the drill. The display module for the system is normally on the front face of the main toolbar near the left gauge wheel.

Acremeter Console 80377

The acremeter calculates and displays the field acres and total acres accumulated.

The meter counts rotations of the main ground drive shaft before the clutch. The meter tallies all movements with the drill unfolded, whether planting or not.

There are three buttons on the face of the acremeter:

Select - Navigates to the next screen. If the current screen has any settings, pressing the Select button will also save the current screen's settings.

Pressing Select while the screen is inactive will activate display mode starting on screen A1.

Up Arrow - Increments current value. If the current screen only displays a reading, then arrow buttons can be used to reset current reading or for navigation.

Down Arrow - Decrements current value. If the current screen only displays a reading, then arrow buttons can be used to reset current reading or for navigation.

Operating Instructions

The electronic acremeter operates in two modes: sleep and entry. In sleep mode, the display is blank, and the counter is accumulating acres. Sleep mode will be entered if a button is not pressed for 20 seconds. In entry mode, the display is on, and the operator can enter values.

To access entry mode, press and hold the SELECT button, the acre counter will cycle through the functions that it can perform. The available screens, in order, are:

- Field Acre Count
- Total Acre Count
- Battery Life
- Password
- Pulses per 400ft
- Swath Width
- Calibration
- Units of Measurement
- Sensor Count
- Change Password

Acremeter Screens

Field Acre Count

Displays the number of acres covered since the field acre counter was last reset. if there is an additional acre counting sensor on the machine, an A2 screen will immediately follow the A1 and T1 screens.

Pressing Select navigates to screen T1 or T2.

Press and hold both arrow buttons to reset the current field acre counter.

Total Acre Count

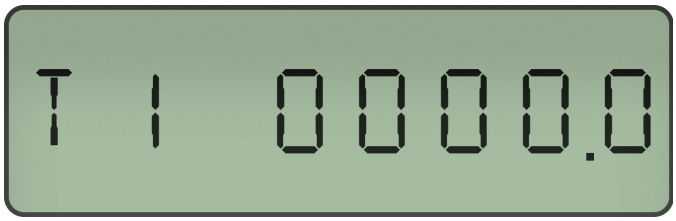

Displays the total number of acres covered since the total acre counter was last reset. if there is an additional acre counting sensor on the machine, a T2 screen will immediately follow the T1 and A2 screens.

Pressing Select navigates to screen BAT or A2.

Battery Life

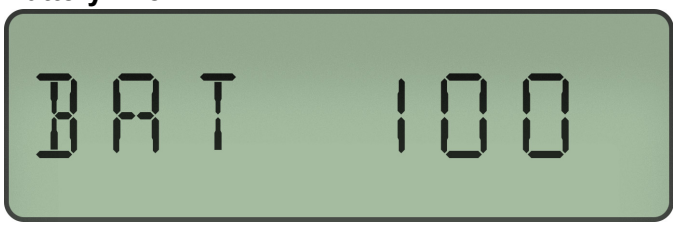

Displays the percentage of remaining battery life.

Pressing Select navigates to screen PW.

Password

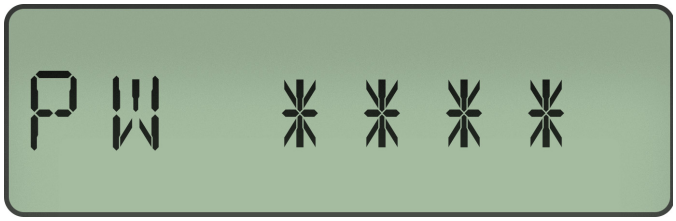

Displays the password screen. Entering your system password enables access to configuration parameters.

Use the arrow buttons to enter your 4 digit password.

Pressing Select while password is salted - **** - will navigate to the A1 screen.

Pressing Select while the correct password value is entered will navigate to the P1 screen. If the password is incorrect, the PW screen is reset.

Pulses Per Distance

Displays the pulse scaling factor. This value affects the number of pulses emitted per 400ft traveled.

Use the arrow buttons to increase or decrease the scaling factor.

Pressing Select will save the configuration and navigate to the P2 or SW screen.

Swath Width

Displays the machine's swath width. To correctly calculate the number of acres planted, the acre meter needs the swath width of the drill.

Use the arrow buttons to increase or decrease the swath width.

Pressing Select will save the configuration and navigate to the CAL1 screen.

Calibration

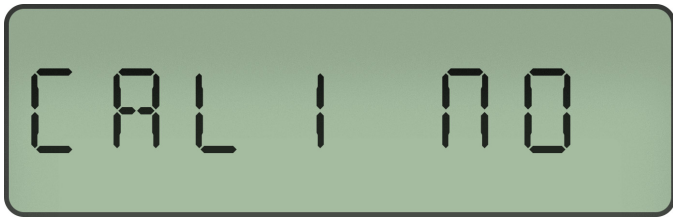

Displays either the calibration request status or the current calibration value.

If displaying the request status - YES or NO - and status is YES, pressing Select begins sensor calibration.

If displaying the request status and status is NO, pressing Select does not begin sensor calibration and instead navigates to the UNITS or CAL2 screen.

When calibrating and calibration value is greater than the acremeter's minimum required value, pressing Select saves the calibration value and navigates to the UNITS or CAL2 screen.

Units of Measurement

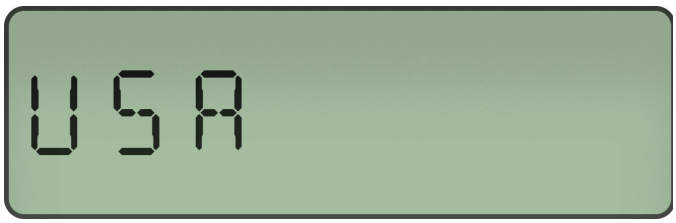

Displays the units of measurement used by the acre meter.

Use the arrow buttons to change the units of measurement to either USA - Imperial - or METRIC.

Pressing Select saves the unit selection, converts the swath width value, and navigates to the SENSOR screen.

Sensor Count

Displays the number of active sensors in the system.

Use the arrow buttons to change the entry value.

Pressing Select saves the sensor count configuration and navigates to the CHPW screen.

Change Password

Displays either the password change status or the new password value.

If displaying the change status - YES or NO -, use the arrow buttons to switch the change status.

If displaying a new password value, use the arrow buttons to increase or decrease the new password value. Holding the arrow buttons will automatically increase or decrease the password value.

If displaying the change status - YES or NO - and the status is YES, pressing Select allows for a new password to be entered.

If displaying the status and status is NO, pressing Select navigates to the A1 screen.

■ Parking

Perform the following steps when parking the drill for 36 hours or less. Refer to "**Storage**", to prepare for long-term storage.

Parking Model 3P606NT

1. Park drill on a level, solid area.
2. Lower 3-point hitch until drill is on the ground.
3. Unplug wiring harness from tractor. Do not allow harness end to rest on the ground.
4. Extend or retract the top link of the tractor until top 3- point pin is free. Remove pin.
5. Remove pins from lower links.

Parking Model 606NT

1. Park drill on a level, solid area.
2. Lower drill until openers are resting on the ground.
3. Securely block tires to prevent rolling.

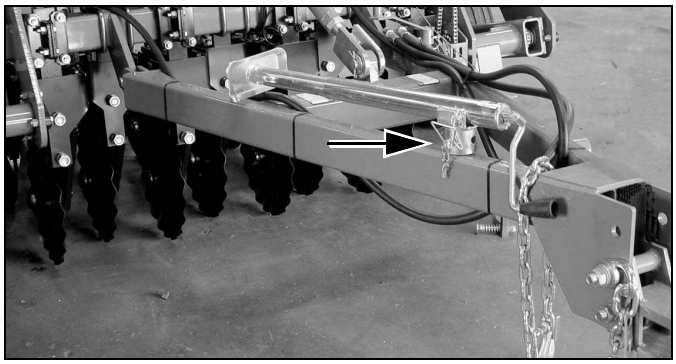

Parking Jack Storage 24481

Parking Jack Lowered 18473

4. Move jack to side stob near hitch. Re-pin as shown in . If ground is soft, place a board or plate under jack.
5. Extend jack until tongue weight is off tractor drawbar.

Refer to (which depicts the hitch of a pull-type drill; the hose caddy and connector storage cap are similar on 3-point drills, if they have hydraulics)

6. Set tractor remote circuit for Lift to Float. Unplug hydraulic hoses. On newer drills, store the hose ends ① in the keyhole slots ② of the hose caddy plate.

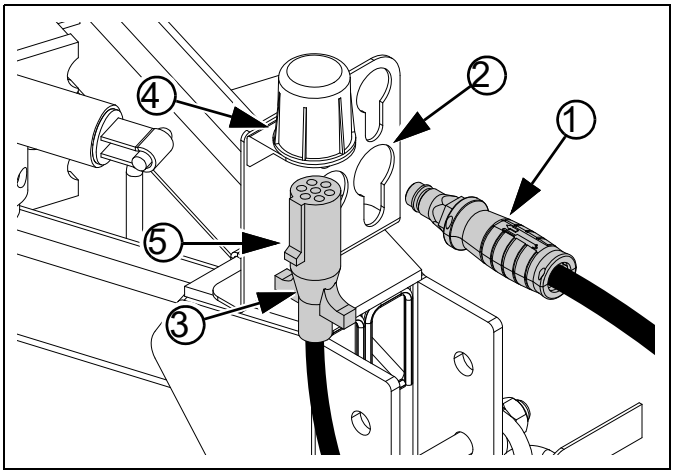

Hose and Connector Storage 36173

7. Unplug wiring harness from tractor. On newer drills, insert the lighting connector ③ into the bottom of the connector cap ④. Rotate the plug as necessary until the keying tab ⑤ clears a mating cutout in the cap base, then rotate the plug 90 degrees. Do not allow hose ends or cable ends to rest on the ground.
8. Remove hitch bolt and safety chain from tractor drawbar.

Storage

Store drill where children do not play. If possible, store the drill inside for longer life.

1. Unload seed boxes. Thoroughly clean seed-treatment residue from boxes and feed cups. See "**Seed Clean-Out**" on page 40.
2. Remove any dirt and debris that can hold moisture and cause corrosion.
3. Lubricate and adjust all roller chains.
4. Take special care to oil feed cup drive sprocket in its square bore.
5. Perform "**Lubrication and Scheduled Maintenance**" starting on page 43.
6. 606NT: Grease exposed cylinder rods.
7. Inspect drill for worn or damaged parts. Make repairs and service during the off season.
8. Use spray paint to cover scratches, chips and worn areas on the drill to protect the metal.
9. Disconnect seed hoses from openers. Permanent elongation and premature cracking of hoses may occur if stored connected. Plug hose ends to prevent pest entry into seed boxes.
10. Cover with a tarp if stored outside.

Adjustments

To get full performance from your drill, you need an understanding of all component operations, and many provide adjustments for optimal field results. Some of these have been covered earlier in this manual.

Even if your planting conditions rarely change, some items need periodic adjustment due to normal wear.

Planting Depth

Setting nominal planting depth, and achieving it consistently, is affected by multiple adjustable drill functions. From greatest to least effect they are:

- Opener depth (press wheel height)
- Coulter depth
- Opener down-pressure (spring)
- Opener frame down-force (optional weights)
- Row unit down-pressure spring
- Opener (tool bar) height
- Disc blade adjustments (as discs wear)

Seed Rates

Seeds are applied by fluted feed meters driven by the left end or center gauge wheel. Independent mechanisms control the rate for each box. Changing one rate does not affect the rate of other boxes.

Rate setting details are in Seed Rate manual .

Main Box seed rate is controlled by adjustments for:

- Drive Type gearbox lever
- Rate handle at seed box (drill front)
- Feed Cup Door handle (one each seed tube)

Native Grass (Option) Seed rate is controlled by:

- Sprocket pairings at drill front
- Rate Reduction kit (if used)

Small Seeds (Option) rate is controlled by a Rate Handle (drill rear).

Adjustment	Page	The Adjustment Affects
Main Seed Box Rate		
Drive Type	SRM[a]	Coarse seed rate
Rate Adjustment Handle	SRM[a]	Fine seed rate
Seed Cup Doors	SRM[a]	Consistent seed metering
Native Grass Rate		
Sprocket Selection	SRM[a]	Fine seed rate
Seed Rate Reduction	SRM[a]	Coarse seed rate
Small Seeds Rate	SRM[a]	Fine seed rate
Frame Height	14	Compensate for unusual opener depths
Frame Level	14	Consistent seed depth
Frame Weight Adjustment	30	Consistent seed depths in challenging conditions
Coulter Depth	31	Furrow depth and consistent seed depth
Coulter Down-Force	32	Consistent furrow in challenging conditions
Drive Clutch Adjustment	32	Seeding only with openers in ground
Opener Spring	34	Consistent seed depths in challenging conditions
Disc Blade Adjustment	35	Compensate for disc wear
Disc Scraper Adjustment	36	Consistent seeding depth
Opener Depth (Press Wheel Height)	38	Primary control of seed depth
Press Wheel Selection	50	Furrow coverage behind seeding
Drive Idler Adjustment (606NT)	39	Consistent seed flow

a. SRM: Seed Rate Manual: This adjustment is described in manual .

Frame Weight Adjustment

In some challenging no-till conditions, the drill may not have enough weight to enable consistent coulter soil penetration. In such cases, additional weight may help.

An optional weight bracket kit is available. See page 52 for ordering information. The kit includes two brackets ①. The kit itself adds 180 pounds (82 kg) to the drill. It accepts up to 600 pounds (272 kg) of standard tractor weights (300 pounds on each bracket), for a maximum of 780 pounds (354 kg) additional weight.

See table at right for available down-force per coulter, with various drill and weight kit configurations.

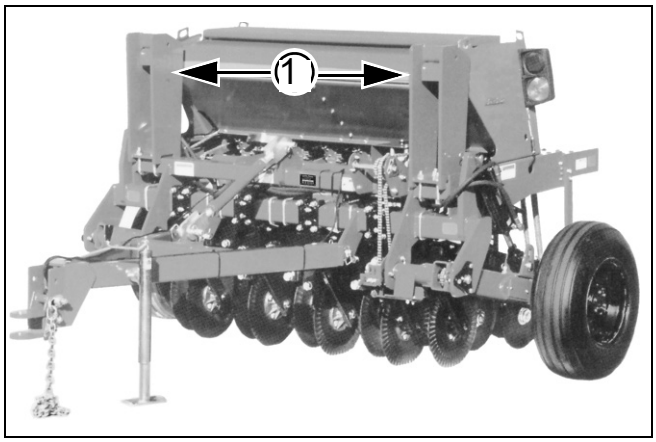

Accessory Weight Brackets 32703

CAUTION

Possible Transport Hazard:

Re-check that the tractor or towing vehicle is adequate for transport, particularly with a 3-point drill. Consider transporting without weights on the drill. A weight kit with maximum weights can increase empty drill weight by 34%.

Tractor Damage/Field Results Risks:

With weights installed, re-check that the tractor is adequate to pull the drill afield. A tractor that was marginal with the standard drill may provide inadequate performance with accessory weights.

Always install equal weight on each bracket. Unbalanced weights causes uneven furrow and seeding depth across the drill.

- The maximum number of tractor weights may vary by weight style and supplier.

After installing weights, re-check frame height and level (page 14), coulter depth (page 31) and opener disc depth (page 38).

■ Coulter Adjustments

A no-till coulter ①, is mounted directly ahead of each opener on the drill. The coulters cut through heavy trash and make a groove in the soil for the openers.

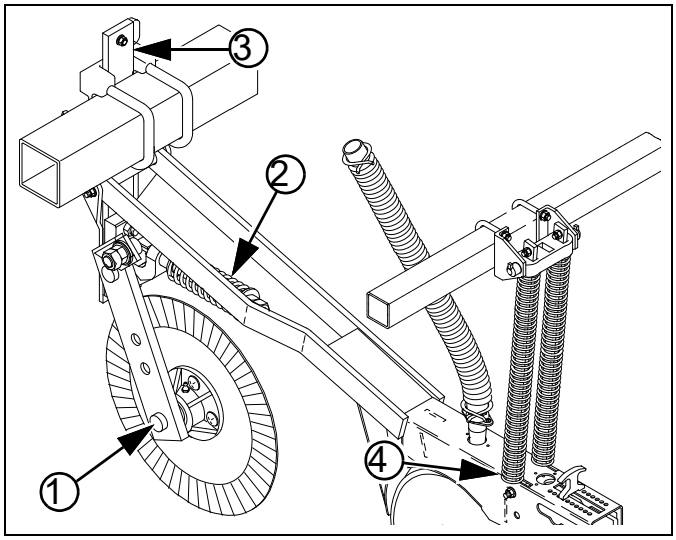

Frame-Mounted Coulter 18645

The coulter is designed to operate with its spring ② at full extension. The spring is briefly compressed as the disc encounters and rides over difficult obstructions.

Coulter Depth

Great Plains recommends operating at a tool bar height of $24^3/_4$ in. (62.9 cm). Small adjustments may be required for unusual seeding depths and as coulter discs wear. If the coulters are not reaching desired depth (and the springs are uncompressed), the drill may need more weight (page 30).

Drill-wide coulter depth is controlled by tool bar height. The coulters are mounted on the drill frame. Group coulter cutting depth changes as the drill height is raised and lowered.

- When the opener frames are running level, the opener disc depth is $^1/_4$ in. (6 mm) above coulter depth.

Tool bar height is set by the tractor hitch for 3-point drills, and by cylinder depth stop (page 14) for pull-type drills. Individual Coulter Depth

Individual coulter depth may be adjusted by raising and lowering the spring bar ③.

Seeding Depth Risk:

When adjusting coulter height, also reset opener spring force (page 34). Changing the coulter height changes the distance between row unit and spring attachment.

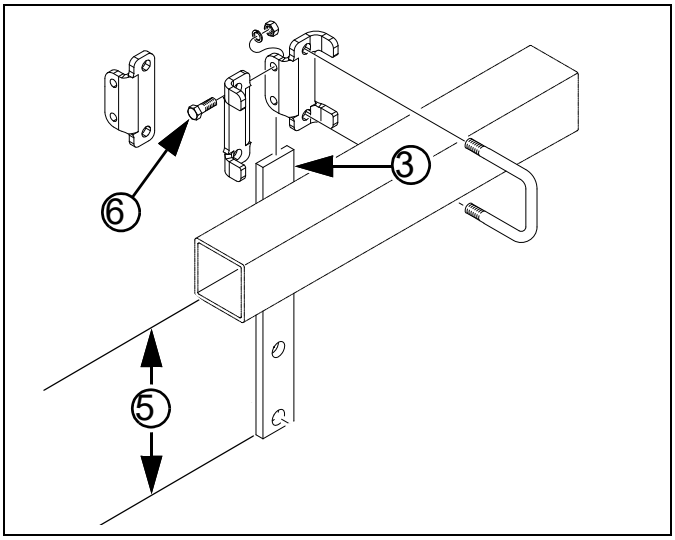

Coulter Spring Bar 32612

1. Determine the new coulter depth desired, and/or the difference between that and the current depth.
2. Raise the drill until the coulter discs are just touching the ground. The press wheels are supporting some row unit weight at this point.
3. Measure the current spring bar length ⑤, from bottom of tool bar to bottom of spring bar. For reference, the factory setting is: ⑤ $12^1/_2 \pm ^1/_8$ in. (31.8±3 mm)
   Determine the new bar length required.
4. Loosen the clamp bolts ⑥. Use a mallet to adjust the bar height. Tighten the clamp bolts to Grade 5 torque specification.

Coulter Down-Force

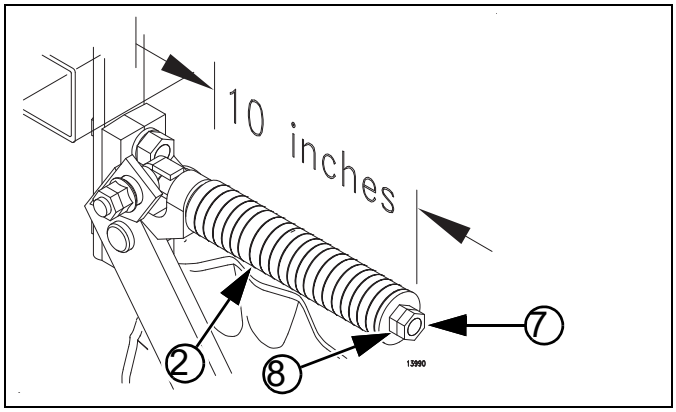

Coulter Spring Length 13990

Spring Length		Initial Vertical Coulter Force	
Inches	mm	Pounds	Kilograms
10 1/ 2 in.	267 mm	175 lbs.	79 kg
10 1/ 4 in.	260 mm	300 lbs.	136 kg
(f) 10 in.	254 mm	400 lbs.	181 kg
9 3/ 4 in.	248 mm	525 lbs.	238 kg

f. Factory setting.

32774J

Coulter springs ② are preset at: 10 in. (25.4 cm) giving coulters an initial maximum operating force of 400 pounds (181 kg). This setting is adequate for many difficult no-till conditions.

Machine Damage Risk:

Resetting coulter-spring length shorter than 9 3/ 4 in. (24.8 cm) inches may contribute to a premature failure of parts not covered by warranty. If additional force is needed, add weights to drill (page 30).

For lighter no-till conditions where rocks or other obstructions are a problem, you can lengthen coulter springs to protect coulters from impact. Refer to table at right.

1. Measure current spring length.
2. Loosen or remove jam nut ⑦.
3. Rotate adjust nut ⑧ to set spring length.
4. Tighten set jam nut.

■ Drive Clutch Adjustment

(Model 606NT only)

The main drive clutch ① on a pull-type drill is a mechanical-release, jaw-style design. You may need to adjust the clutch for proper engagement and disengagement.

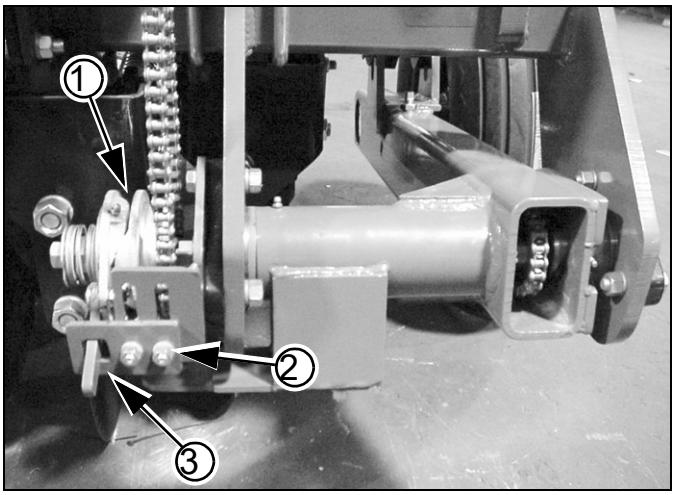

Drive Clutch 18482

When properly adjusted, the cam plates disengage the clutch jaws completely when the drill is raised. When lowered in field position, clutch jaws should be engaged.

To adjust, loosen bolts ② on clutch tab ③. Slide tab up or down to change point at which cam plates meet. When satisfied with adjustment, tighten bolts on clutch tab.

■ 06 Series Row Unit Adjustments

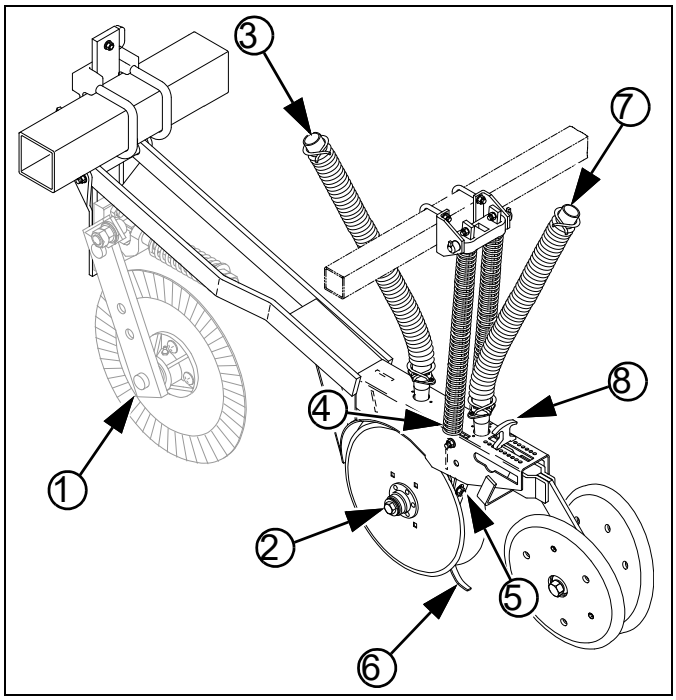

06 Series Row Unit 32720

Machine Damage Risk:

Never back up with row units on or in the ground. Seed tubes will plug or be seriously damaged. Raise the drill for all reverse and short radius turns, and when stopping while facing up hill.

Refer to (which depicts an 06 Series row unit populated with most optional accessories)

From front to back, an 06 Series row unit (opener) can include the following capabilities (some optional):

1. **Coulter** (standard)
   This is not part of the opener, but is co-mounted with it on the tool bar. See "**Coulter Adjustments**" on page 31.
2. **Opener Discs** (standard)
   Row-unit double disc openers create the seedbed furrow. They have adjustments for spacing. See "**Disc Blade Adjustments**" on page 35.
3. **Main Seed Hose** (standard)
   Seed released by the metering cups is gravity fed by the hose to the seed tube (not shown) between the opener discs. The hose and seed tube require no adjustments.
4. **Down-Pressure Springs** (standard)
   Two springs per row provide the primary force on the opener discs. The spring setting may need adjustment for challenging soil conditions and/or for changes in coulter depth. See "**Opener Spring**" on page 34
5. **Inside Scraper** (standard)
   This feature helps prevent soil buildup on the inside surfaces of the opener discs, allowing them to meet sharply and prepare a crisp seed furrow. See "**Disc Scraper Adjustment**" on page 36.
6. **Seed Firmer** (seed flap standard)
   A seed firmer confines seed bounce and can press the seed into the furrow. The standard seed flap requires[1] no adjustments. See "**Seed Flap Replacement**" on page 41. Optional Keeton® or Seed-Lok® firmers do have adjustments. See "**Seed Firmer Adjustments**" on page 36.
7. **Option Seed Hose(s)** (optional)
   If Native Grass or Small Seeds options are installed, there will be one or two additional seed hoses at or aft of the springs. The Small Seeds tube may be reversed if desired. See "**Seed Firmer Adjustments**" on page 36.
8. **Press Wheel Height** (standard)
   The T-handle is primary control for seeding depth. See "**Opener Depth (Press Wheel Height)**" on page 38. The press wheels have no other adjustments, but a choice of press wheel styles and sizes is available. Consult your dealer.

1. The seed flap may need to be shortened in length if an optional Keeton® or Seed-Lok® firmer is installed.

Opener Spring

Opener springs provide the down pressure necessary for opener discs to open a seed trench. The springs allow the openers to float down into depressions and up over obstructions.

Each opener spring can be adjusted for down pressure. This is useful when planting in tractor tire tracks.

If coulter depth is altered for a row, the spring pre-compression needs to be changed to compensate for the change in row unit operating height.

To adjust the pressure, remove “W” clip at bottom of spring. Place “W” clip in a higher hole in spring rod for more pressure or in a lower hole for less pressure

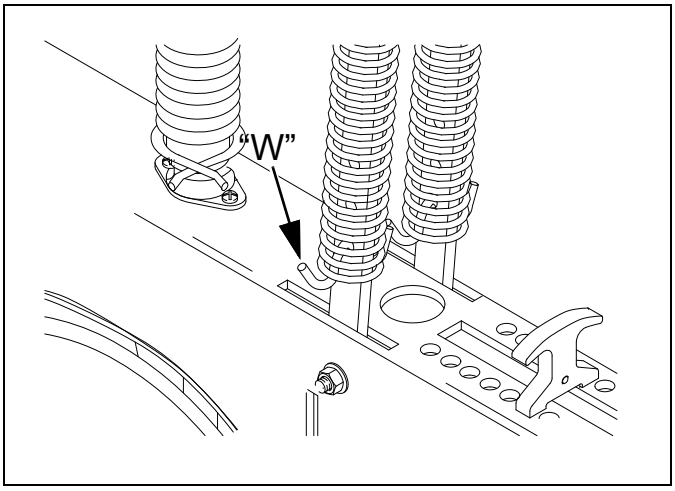

Minimum Force 12102

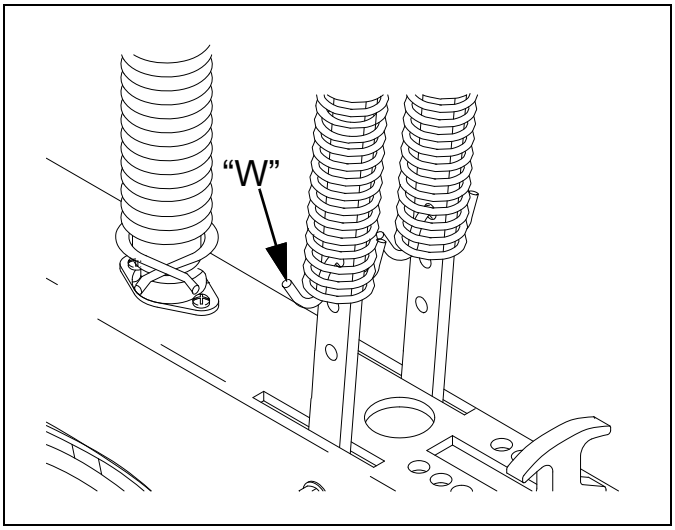

Maximum Force 12103

Use this adjustment only for a few rows, typically in tire tracks.

Do not set row force higher on all rows. Instead use coulter adjustments (page 31) and frame weight adjustments (page 30).

Re-check drill level (page 14) after adjusting row force.

Disc Blade Adjustments

Raise drill and block it up or lock it up.

Opener Disc Spacing

CAUTION

Sharp Object Hazard:

Be careful working around and handling disc blades. Wear gloves. Edges of both new and well-worn blades can be sharp.

Opener disc angle and stagger is not adjustable, but disc-to-disc spacing is, and may need attention as discs experience normal wear. Spacers must be reset when blades are replaced.

The ideal spacing causes the blades to be in contact for about one inch. If you insert two pieces of paper between the blades, the gap between them should be 0 to 1.75 in. (0 to 4.4 cm)

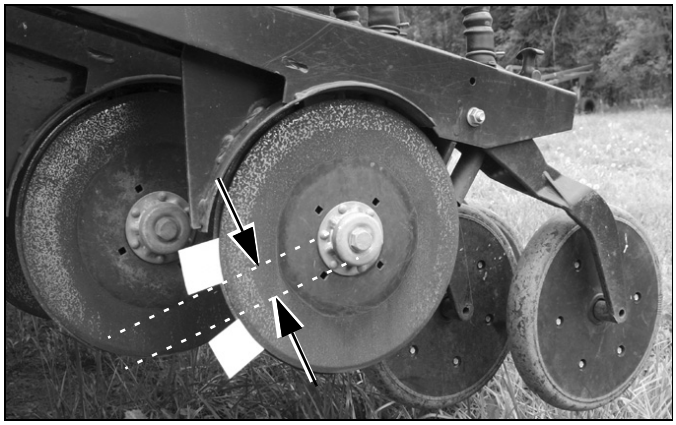

Checking Disc Contact 26451

If the blades do not touch, they should at least be close enough so that a business card encounters some friction when passing between them.

If the contact region is significantly larger or the gap too wide, it needs to be adjusted by moving one or more spacer washers. If the contact region varies with blade rotation, one or both blades is likely bent and in need of replacement. If removing all spacers cannot bring the blades into contact, they are worn out and need replacing.

Adjusting Disc Contact

1. Remove the bolt ① retaining the opener disc on one side. Carefully remove the disc, noting how many spacers ② are outside the disc and inside the disc. Do not lose the hub components and dust cap ③.

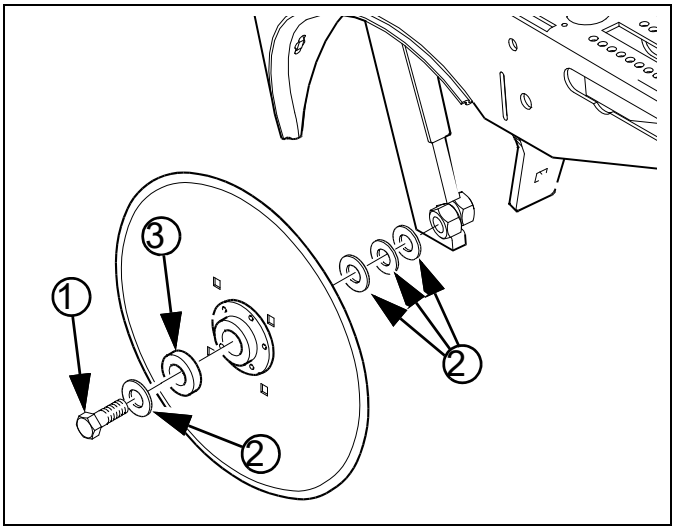

Adjusting Disc Spacers 26385

- It is not necessary to remove the hub flange or bearing for this adjustment.

2. To reduce the spacing between the discs (the normal case), move one spacer washer ① from the inside to the outside of the disc. It may be necessary to loosen the scraper (page 36) to reduce disc-to-disc spacing.
3. Re-assemble and check disc contact.
4. Re-adjust scraper.

Disc Scraper Adjustment

To keep opener discs turning freely, dirt scrapers are mounted between discs to clean as the discs rotate. As field conditions vary, scrapers may need to be adjusted. In damp conditions, scrapers may need to be lowered. If openers are not turning freely, scrapers may need to be raised.

Re-adjust scrapers when replacing discs or adjusting disc spacing.

To adjust scrapers, loosen $^{3}/_{8}$ inch bolt ④ shown in and move scraper as needed.

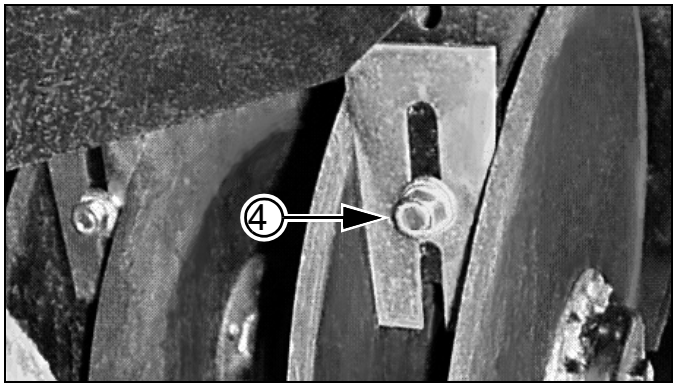

Disc Scraper Adjustment 18647

Seed Firmer Adjustments

Standard 05/06 Series row units include a seed flap. An optional Seed-Lok® or Keeton® seed firmer may be ordered separately.

The seed flap requires no adjustment, but may need to be replaced if worn, and may need to be shortened if an optional seed firmer is added after initial delivery. See also "**Seed Flap Replacement**" on page 41.

CAUTION

Sharp Object Hazard:

Use caution when making adjustments in this area. Row unit disc blades may be sharp. To adjust the Keeton® Seed Firmer, lower the drill until the discs of the row units are resting on the ground.

Seed-Lok® Lock-Up (Option)

Optional Seed-Lok® firming wheels provide additional seed-to-soil contact. The wheels are spring loaded and do not require adjusting. In some wet and sticky conditions the wheels may accumulate soil. To avoid problems associated with this, you can lock-up the firmers.

To lock up Seed-Lok® wheels:

1. Pull catch wire ⑤ aside.

(Seed-Lok® Lock-Up shown below has opener disc removed for clarity - this task can be performed with discs mounted)

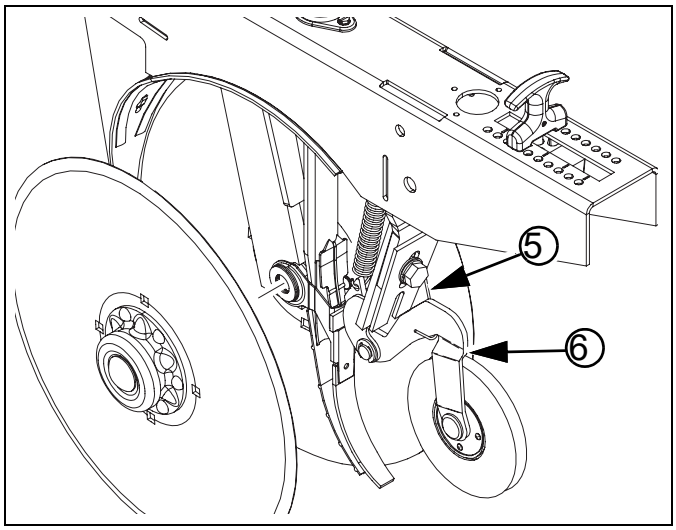

Seed-Lok® Lock-Up 27122

2. Pull firming-wheel arm ⑥ up and release wire to catch arm.

Keeton® Seed Firmer Adjustment (Option)

The optional Keeton® Seed Firmer is an engineered polymer shape that slides down the seed trench. It traps seeds as they exit the seed tube and firms them into the bottom of the furrow “V”.

The Firmer is provided with a preset tension which is recommended for using the first year. The tension screw ① can be tightened in subsequent years according to your needs. Firmers should provide just enough tension to push seeds to the bottom of the trench.

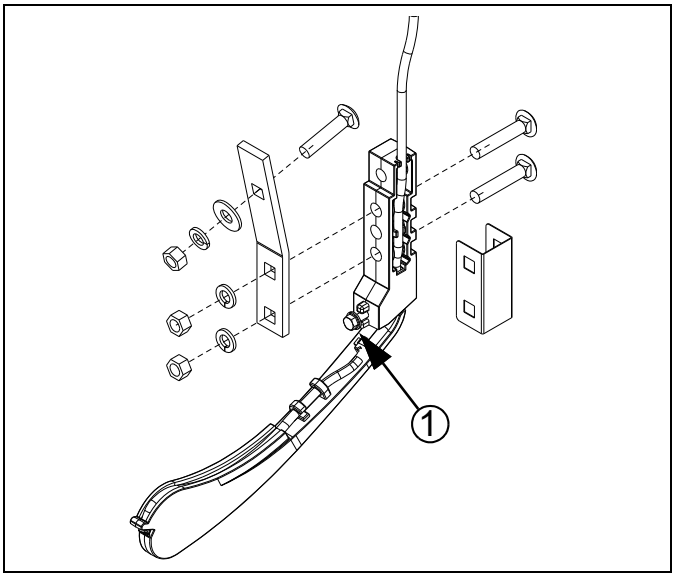

Keeton® Seed Firmer 26390

Small Seeds Tube Adjustment (Option)

On a drill with the Small Seeds option, deeper seed placement may be achieved by rotating the seed tube ① to face forward.

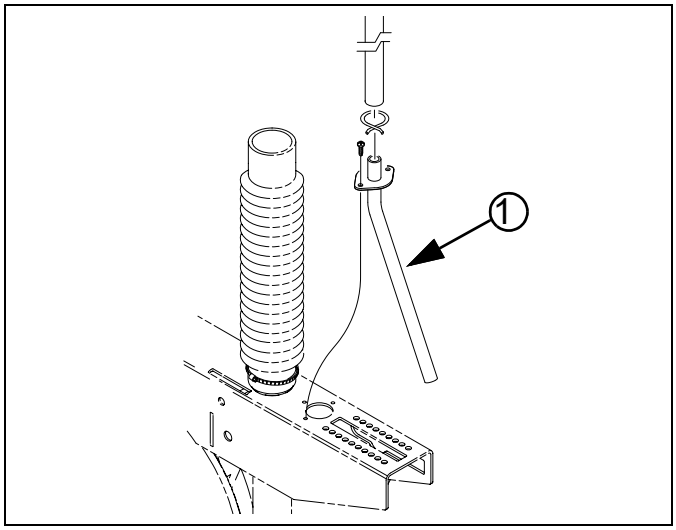

Small Seeds Tube 18618

This orientation is suggested only if the seed firmer is a seed flap. If a Keeton® or Seed-Lok® is present, seed falls on the firmer and may be scattered rather than placed deeper.

Opener Depth (Press Wheel Height)

A press wheel attached to each opener body controls seeding depth ①. To maintain consistent depth, the relationship between the bottom of the opener discs and press wheel is fixed upwardly by an adjustable stop on each opener.

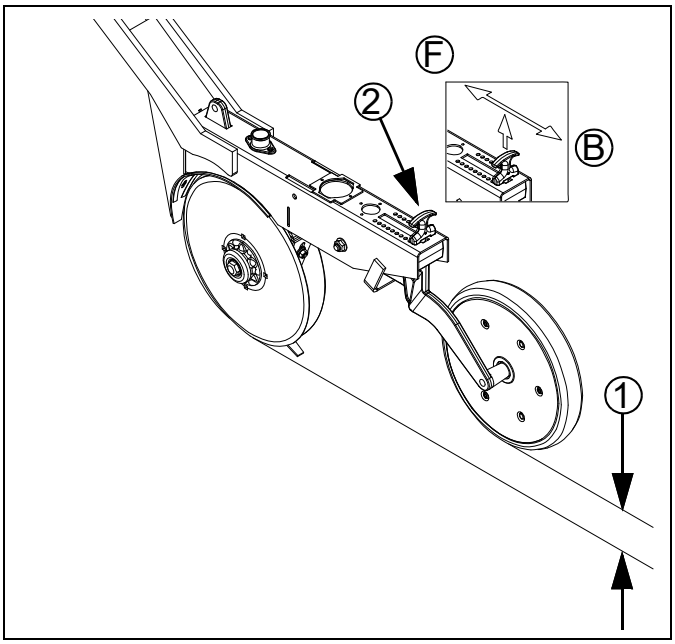

Adjusting Opener Depth 26441

The press wheels also close the seed trench and gently press soil over seed. To provide consistent soil firming, press wheels are free to move down from normal operating position. This maintains pressing action even if opener discs encounter obstructions or hard soil.

To adjust, first raise openers slightly, then lift and slide T handles ② on top of openers Adjust all press wheels to the same height.

- Each increment of the handle adjusts the seeding depth by approximately $^1/_8$ in. (6.3 mm). The range is approximately 0 to $3^1/_2$ in. (0-89 mm) seeding depth.
- For more shallow seeding, slide T handles forward Ⓕ toward implement.
- For deeper seeding, slide T handles backward Ⓑ away from implement.

If moving the T handle backward doesn't cause the opener to achieve desired depth, adjust the opener frame down-force (page 34).

Maintenance

Proper servicing and maintenance is the key to long implement life. With careful and systematic inspection, you can avoid costly maintenance, downtime and repair.

Always turn off and remove the tractor key before making any adjustments or performing any maintenance.

Crushing Hazard:

Always have frame sufficiently blocked up when working on, and particularly under implement. You may be severely injured or killed by being crushed under a falling implement.

High Pressure Fluid Hazard:

Check all hydraulic lines and fittings before applying pressure. Use paper or cardboard, not body parts, and wear heavy gloves to check for suspected leaks. Escaping fluid under pressure can have sufficient pressure to penetrate the skin. Fluid escaping from a very small hole can be almost invisible. If an accident occurs, seek immediate medical attention from a physician familiar with this type of injury.

After using drill for several hours, check all bolts to be sure they are tight.

1. Securely block drill before working on it.
2. Lubricate areas listed under "**Lubrication and Scheduled Maintenance**" on page 43.
3. Clean any fittings that do not take grease.
4. Inflate tires as specified on "**Tire Information**" on page 56.
5. Inspect hydraulic hoses for cuts, cracks and aging. Check fittings for evidence of leaks.
6. Replace any worn, damaged or illegible safety decals. Order new decals from your Great Plains dealer. See "**Safety Decals**" on page 6.

Drive Idler Adjustment (606NT)

Two idler sprockets are located inside the left hand gauge wheel arm. They should be readjusted after the first 100 acres (40 hectares) of drill use. From then on, readjust at the beginning of each season.

1. Loosen jam nut ①.

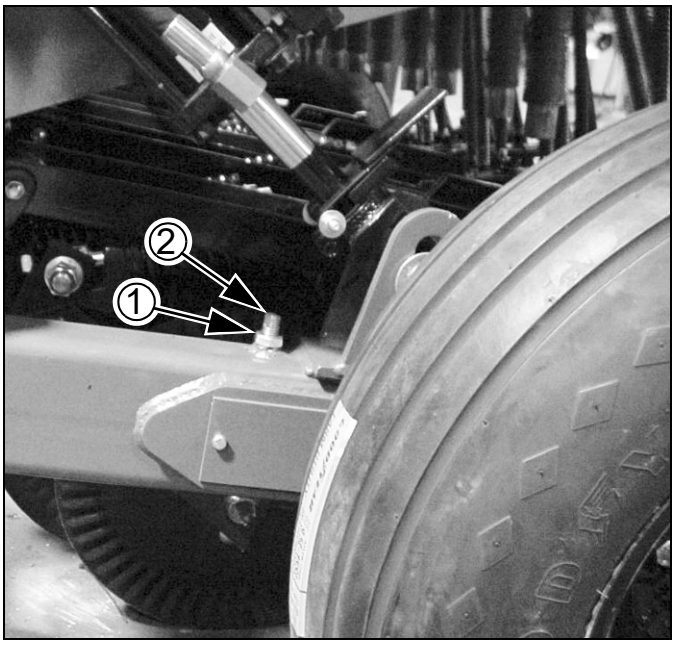

Gauge Wheel Idler Adjustment 18481

2. Move front idler sprocket on top of chain, tightening chain, by screwing in adjustment stud ②.
3. Tighten jam nut to maintain idler position.

- Do not over-tighten stud. Insufficient slack causes excessive wear and premature chain failure.Seed Clean-Out

Seed Clean-Out

Main Box Clean-Out

1. Set the Seed Rate Handle to zero (0). This moves the seed cup sprockets out of the seed path.

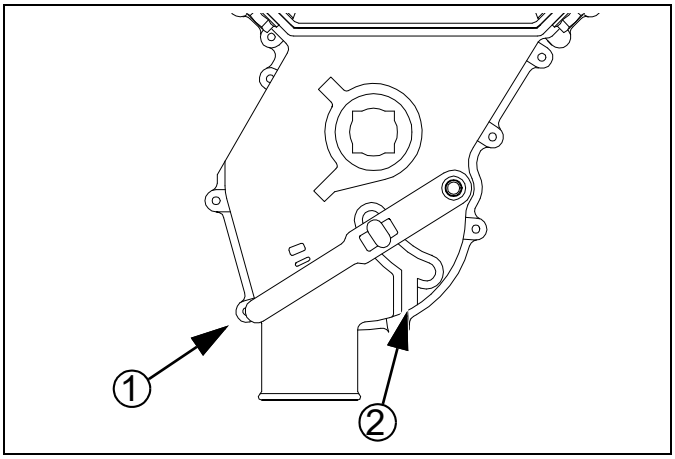

Seed Cup Clean-Out 26211

2. Position a tarp or bucket under each row or set of rows to be cleaned out.
3. At the seed cup for that row, pull the door handle ① out of the operating detent range, and swing it down to position ②.
4. Open the main seed box and use a small brush to sweep seed toward seed cups set to clean-out. If seed does not flow freely, inspect seed cup, hose and seed tubes for obstructions.
5. If a vacuum cleaner is available, use it to remove residual matter.

It is not necessary to operate the seed meter drive shaft for clean-out. With the Seed Rate set to zero, nothing moves inside the seed cups; however, an inspection of the flutes for excess wear and damage does require shaft rotation.

Set the Seed Rate Handle to 100. Raise and lock-up the drill. Turn the seed meter jackshaft with the calibration crank, while another person inspects the flutes from the open seed boxes.

Native Grass Box Clean-Out

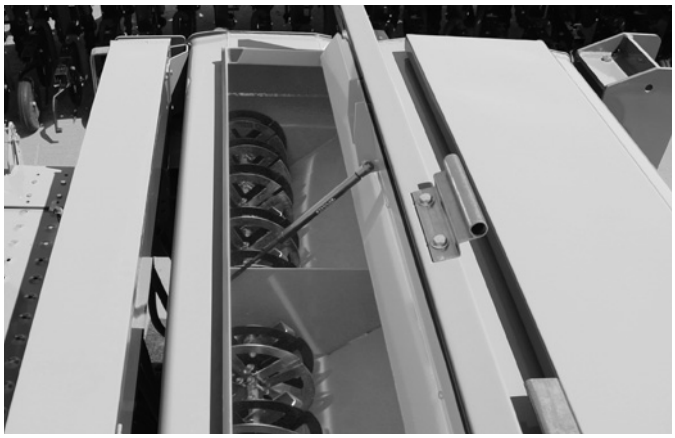

Native Grass Box Open 28362

If a suitable vacuum is available, open the Native Grass box lid, and vacuum out remaining seed.

If too much seed remains for the vacuum, or no vacuum is available:

1. Raise and lock up the drill. Place a tarp under the Native Grass seed tubes.
2. Set the Native Grass (right gearbox) Drive Type to 4. Optionally install the smallest final Driven sprocket.
3. Install the calibration crank, and turn the drive system until no seed flows from Native Grass tubes.
4. Vacuum out any residual material from above.

Machine Damage Risk:

Water wash-out is not recommended for the Native Grass box, particularly if seed lubricants have been used. Water may cause build-up of solidified residue. Filler material used in native grass mixes can also present problems.

Small Seeds Box Clean-Out

1. Open lid of each box and scoop out as much seed as possible.
2. To recover remaining seed, place a collection tarp under the small seeds tubes at the openers.
3. Raise drill.
4. Set seed rate handle to 100.
5. Rotate calibration crank or ground drive wheel until no seed flows.
6. If a vacuum cleaner is available, remove any residual seed from top of meters.

■ Seed Flap Replacement

To replace a seed flap ①, use needle nose pliers or similar tool to grasp “T” top of flap. Pull upward to remove flap from metal bracket ②.

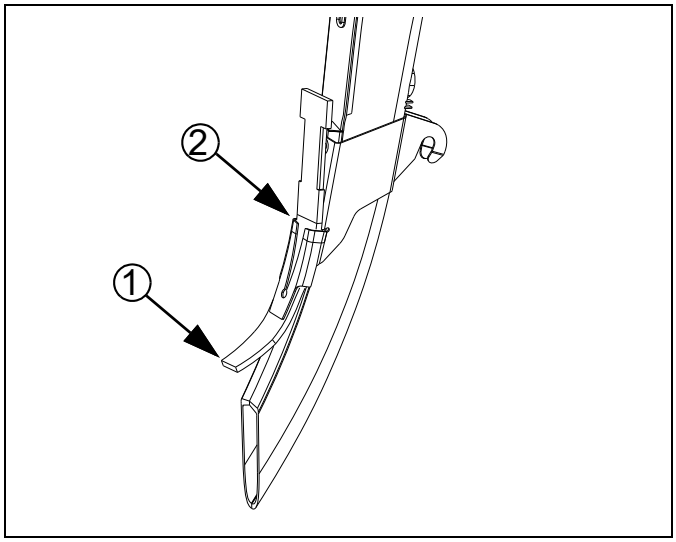

Seed Tube Flap 31047

Push new seed flap ① down through metal bracket ② until flap snaps into place with “T” top resting on top of bracket.

If a Seed-Lok® or Keeton® seed firmer is also installed, it may be necessary to shorten the flap.

Bleeding Hydraulics

WARNING

High Pressure Fluid Hazard:

Escaping fluid under pressure can have sufficient pressure to penetrate the skin. Check all hydraulic lines and fittings before applying pressure. Fluid escaping from a very small hole can be almost invisible. Use paper or cardboard, not body parts, and wear heavy gloves to check for suspected leaks. If an accident occurs, seek immediate medical assistance from a physician familiar with this type of injury.

- In order to prevent trapped air pockets, rod end must be higher than any other part of cylinder during bleeding operation.
- After the drill is raised, a slight settling will occur due to the action of the re-phasing cylinders.

Check that tractor hydraulic reservoir is full.

The drill lifting system is equipped with re-phasing type hydraulic cylinders that require a special procedure for bleeding air from the hydraulic circuits. Read and follow this procedure carefully. Re-phasing type cylinders will not function properly with air in hydraulic circuit.

1. Check hydraulic fluid in tractor reservoir and fill reservoir to proper level. Drill-system capacity is about 1 gallon (4.5 liters). Add fluid to system as needed. A low reservoir level may draw air back into the system, causing jerky or uneven cylinder movements.
2. With drill attached to tractor, jack drill up and support frame at ends near gauge wheels.
3. With drill raised and supported, un-pin cylinders at both gauge wheel arms and frame. Turn cylinders **rod end** up. Wire or otherwise safely support rod ends higher than base ends.
4. With tractor engine idling, engage tractor hydraulics to extend cylinder rods. When cylinder rods are completely extended, hold remote lever on for one minute.
5. Retract cylinders. Extend cylinders again and hold remote lever on for one more minute. Repeat this step two more times to completely bleed system.

6. Re-pin cylinders to drill frame and gauge wheel arm with transport cylinder locks in place. If any air still is trapped in either cylinder, the cylinder will have a spongy, erratic movement and drill will not raise evenly. If necessary, repeat bleeding process.
7. Refill tractor hydraulic fluid reservoir to its proper level.

Chain Maintenance

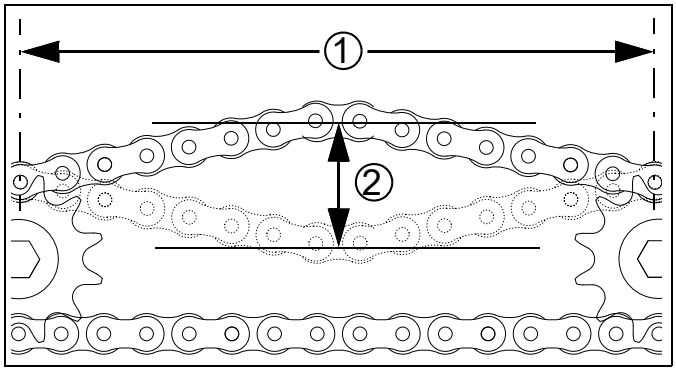

Measuring Chain Slack (idlers Omitted) 27264

Initially check the drive chains after the first 10 hours of drill use. The slack of new chains tends to increase during the first few hours of operation due to seating. Thereafter, check the chains every 100 hours.

Lubricate chains any time there is a chance of moisture, and when being stored at the end of the planting season.

Chain Slack

1. Measure the span ① for allowable slack: Locate the longest span of each chain (usually the span which does not run through the idlers).
2. Determine the ideal slack: Long chains (over 36 inches / 91 cm): $^1/_4$ in. per ft (21 mm/m) Vertical short chains: $^1/_4$ in. per ft (21 mm/m) Horizontal short chains: $^1/_2$ in. per foot (42 mm/m).
3. Measure the current slack ②: Acting at a right angle to the chain span at the center of the span, deflect the chain in both directions. The slack is the distance of the movement.
4. Adjust the idlers for ideal slack.

Whenever mounting a chain, make sure the clip at the removable link is oriented to minimize snags.

Refer to (arrow shows chain direction)

Install clip with open end facing away from direction of chain travel (shown by gray or striped arrows in chain routing diagrams).

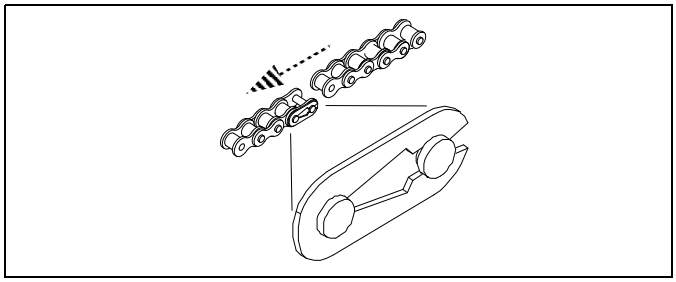

Chain Clip Orientation 26482

Gearbox Maintenance

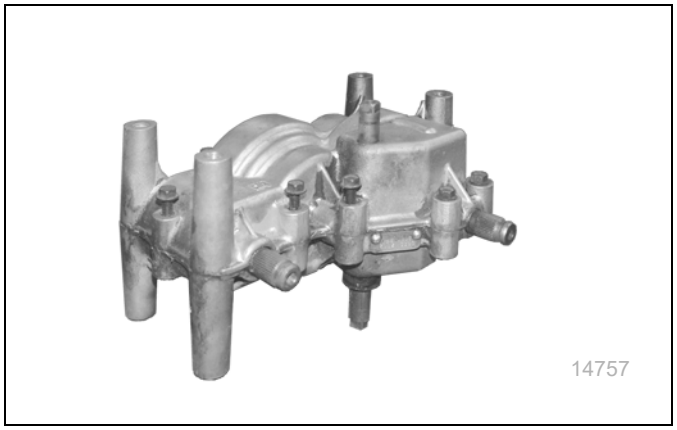

14757

Machine Damage Risk:

Use sealant sparingly. Excess sealant may squeeze off the intended surface and lock bearings or gears.

The gearbox is lubricated and sealed at the factory. Under normal conditions, it does not require maintenance or lubrication.

If the gearbox has been opened for repair, repack all gears and around shaft bearings using at least 7 oz. (200 mL) of gear lube, Great Plains Part No. 788067.

Keep moisture and dirt out of gearbox. Inspect (replace if needed) the rubber seals on gearbox drive and shifter shafts.

Spread a small skim coat of anaerobic sealant (Loctite®[1] 525 or equivalent) to gear case mating surfaces before bolting them back together.

■ Lubrication and Scheduled Maintenance

Coulter Pivots

1 grease bank zerk per coulter; 9 total

Lubrication: Grease

Amount: until grease emerges at pivot

Drive Shaft Clutch

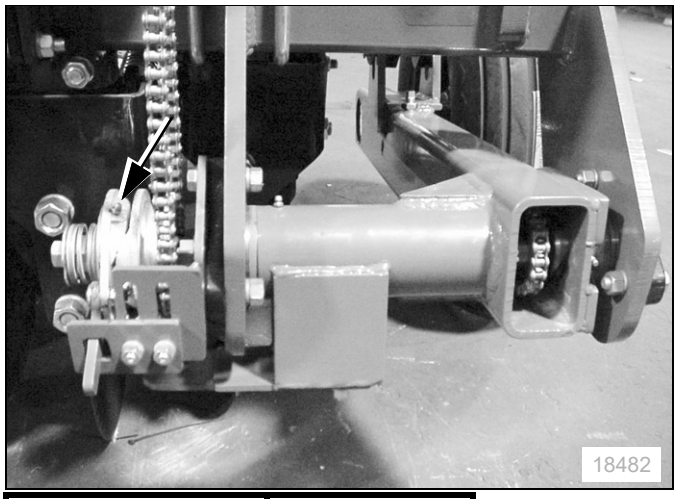

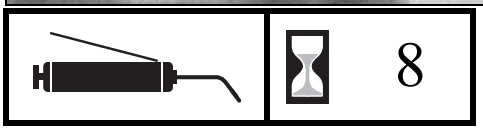

2 zerks total

Lubrication: bearing grease

Amount: until grease emerges

Also smear grease on clutch engagement.

Seed Cup Drive Shaft Sprocket

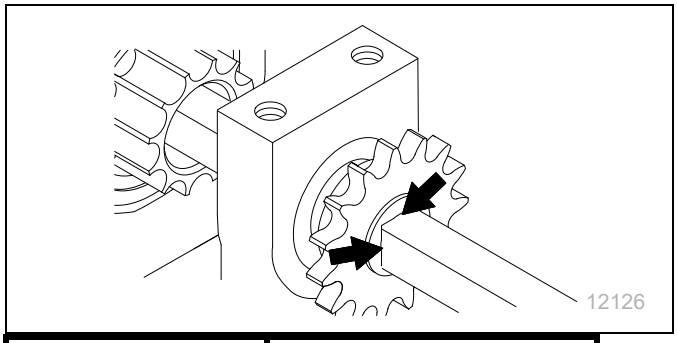

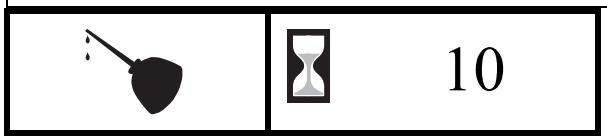

1 sliding sprocket

Type of Lubrication: Oil

Quantity: Coat thoroughly

Move the Seed Rate adjustment handle back and forth to get oil into the square bore. Perform this with seed box empty, or handle may be difficult to set to 100.

Gauge Wheel Arms

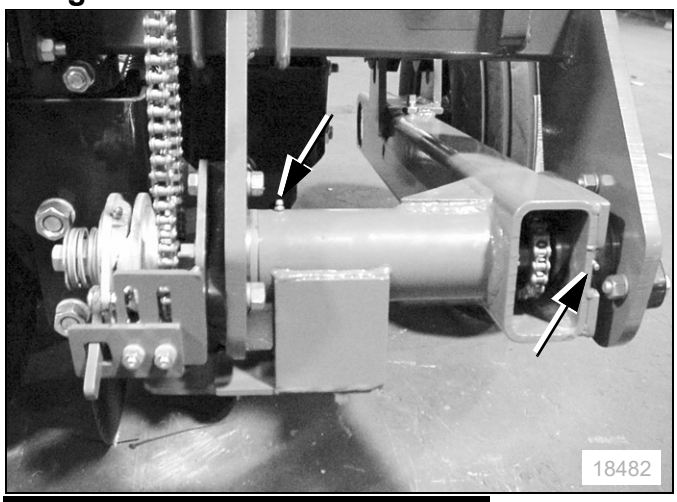

2 zerks each arm, 4 total

Type of Lubrication: Grease

Quantity: Until grease emerges

1. Loctite® is a registered trademark of Henkel Corporation.

Small Seeds Shaft Bearings (Option)

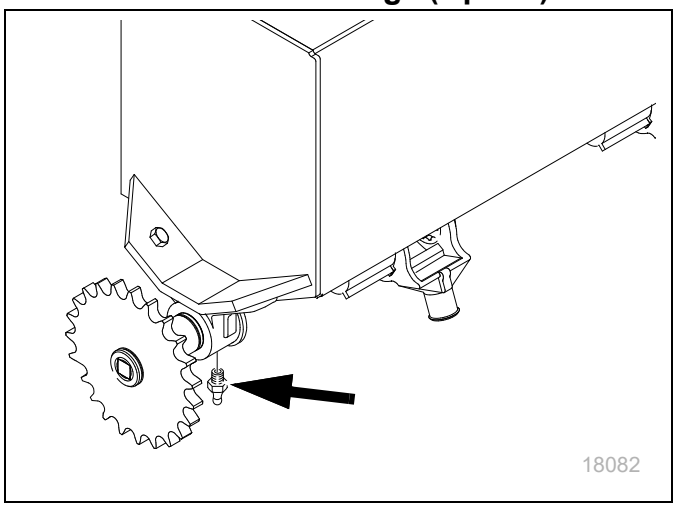

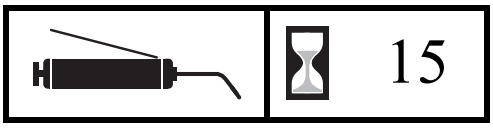

1 zerk total

Type of Lubrication: Grease

Quantity: Until grease emerges

Drive Chains (Model: 3P606NT)

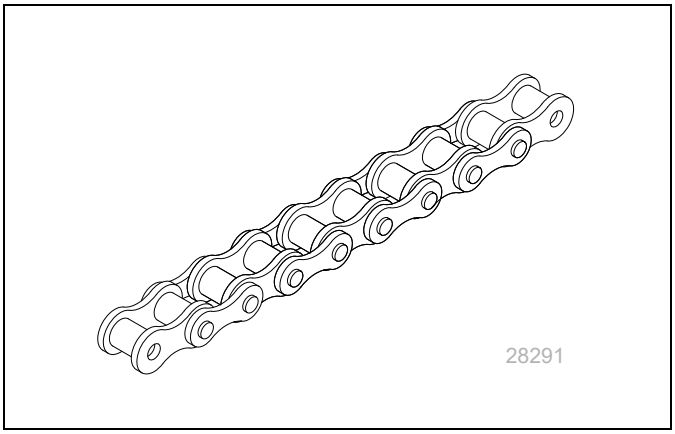

1 to 8 Chains Present:

Type of Lubrication: Chain Lube

Quantity: Coat thoroughly

Standard Chains

- drive wheel to front left jackshaft
- jackshaft to gearbox input
- gearbox output (right) to main seed cup shaft

Option Chains:

- gearbox output (left) to agitator/Native Grass (NG) jackshaft
- agitator/NG jackshaft to main box agitator and/or NG meter shaft
- gearbox input (right, pass-through) to Small Seeds (SGS) front right jackshaft
- SGS front right jackshaft to rear jackshaft
- SGS rear jackshaft to meter shaft drive

Drive Chains (Model: 606NT)

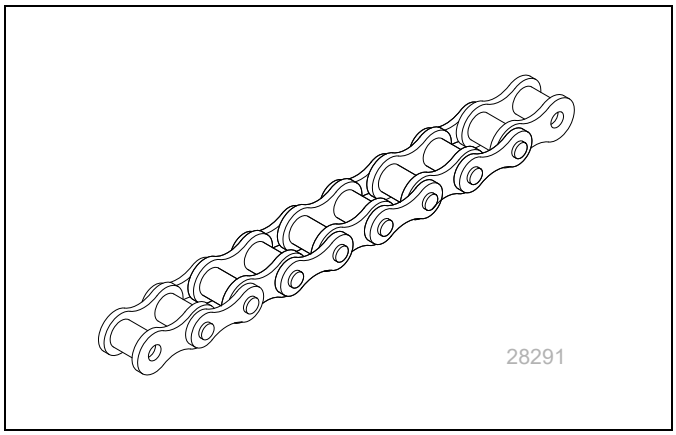

As Required

1 to 9 Chains Present:

Type of Lubrication: Chain Lube

Quantity: Coat thoroughly

Standard Chains

- drive wheel to clutch shaft
- clutch shaft to jackshaft
- jackshaft to gearbox input
- gearbox output (right) to main seed cup shaft

Option Chains:

- gearbox output (left) to agitator/Native Grass (NG) jackshaft
- agitator/NG jackshaft to main box agitator and/or NG meter shaft
- gearbox input (right, pass-through) to Small Seeds (SGS) front jackshaft
- SGS front jackshaft to rear jackshaft
- SGS rear jackshaft to meter shaft drive

Coulter Hubs

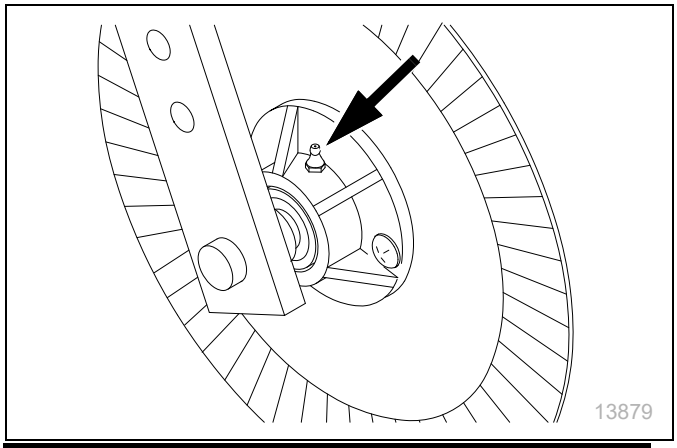

Seasonal

1 zerk per coulter; 9 total

Type of Lubrication: Bearing grease

Quantity: Until resistance is felt

Wheel Bearings (3P606NT)

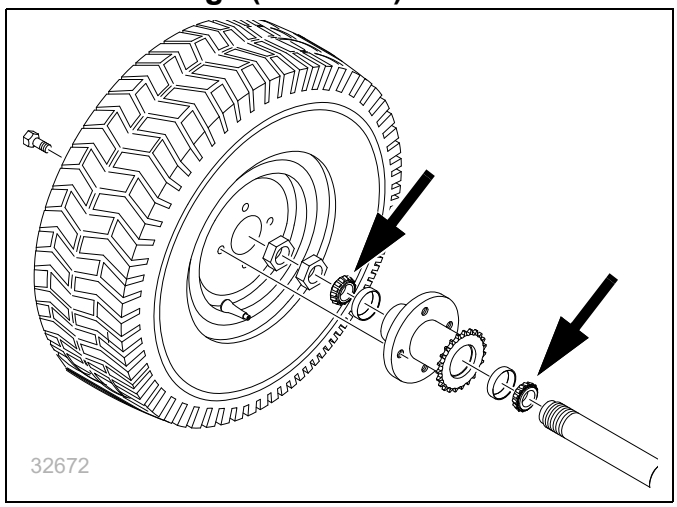

Seasonal

2 races total

Type of Lubrication: Bearing grease

Quantity: Re-pack

Left Wheel Bearings (606NT)

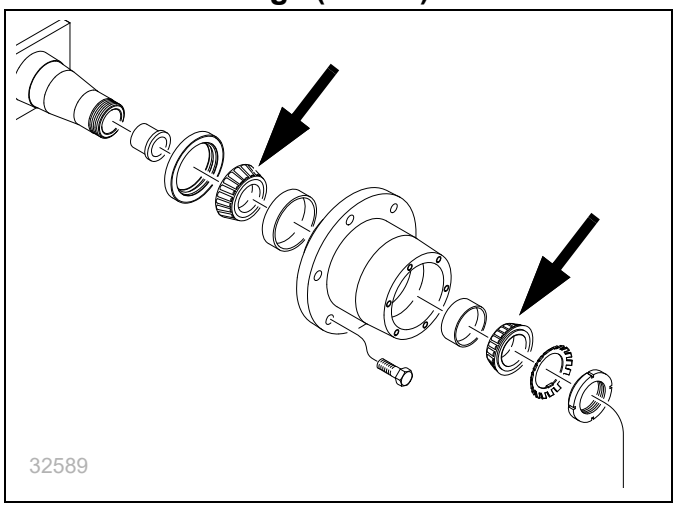

2 races total

Type of Lubrication: Bearing grease

Quantity: Re-pack

Right Wheel Bearings (606NT)

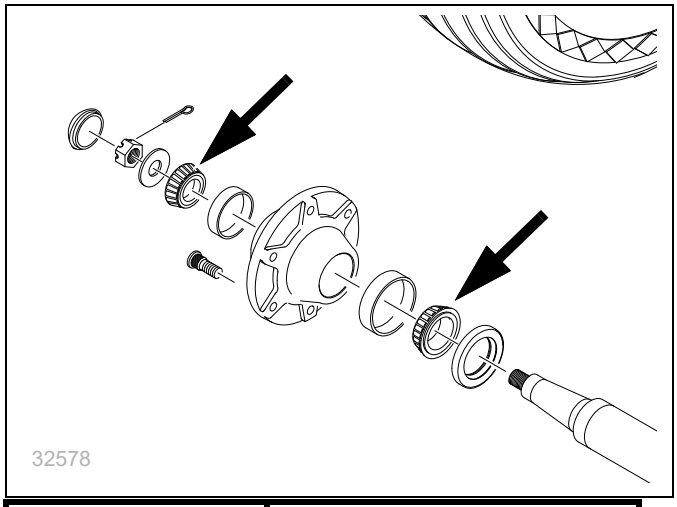

2 races total

Type of Lubrication: Bearing grease

Quantity: Re-pack

Options

Accessories are listed in alphabetical order. To order an accessory, contact your Great Plains dealer.

■ Acremeter

An electronic acremeter is standard on Model 3P606NT and 606NT. If you need a meter with an alternate units of measure, order one of the following parts.

Drill Model	Units	Part Number
3P606NT	acres	823-495C
3P606NT	hectares	823-495C
606NT	acres	823-495C
606NT	hectares	823-495C

■ Carbide Disc Scraper

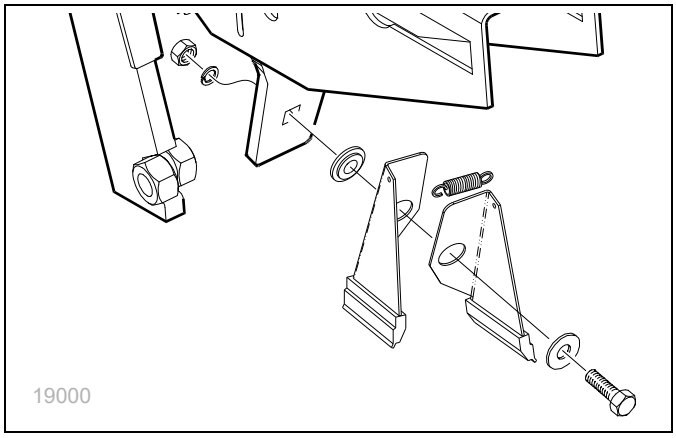

Slotted scrapers are standard.

Optional carbide disc scrapers are spring-loaded and require no periodic adjustment. Scrapers are compatible with the standard seed flap and Seed-Lok®, but not Keeton®.

Description	Part Number
SPRING SCRAPER ASSEMBLY	121-781A

See "**Carbide Disc Scraper Installation**" on page 72.

■ Coulter Blades

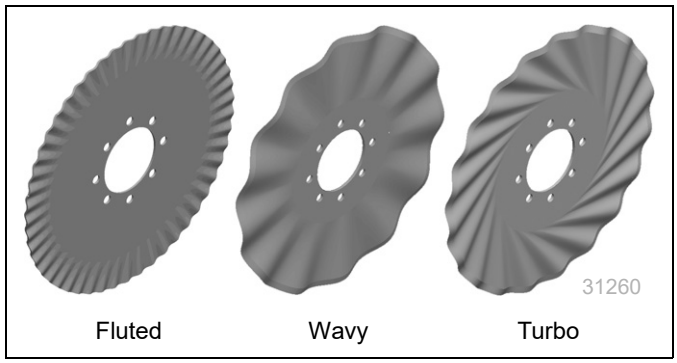

Replacement 17 in. (43 cm) blades are sold individually.

Description	Convolutions	Part Number
$^{5}/_{16}$ inch Fluted	50	820-018C
$^{3}/_{4}$ inch Wavy	24	820-082C
$^{5}/_{8}$ inch Wavy	24	820-116C
$^{5}/_{8}$ inch Wavy	20	820-156C

Hitches

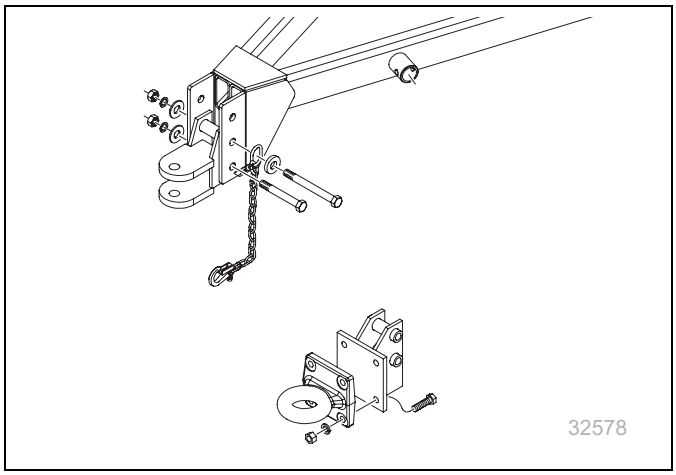

A clevis or pintle hitch must be specified on the original order for a new 606NT drill. An alternative hitch is available as an accessory for conversion in the field.

Drill	Hitch	Option	Field Kit
606NT	Pintle	(81)	177-534A
606NT	Clevis	(83)	177-536A

Seed Tube Plug (Main Seeds)

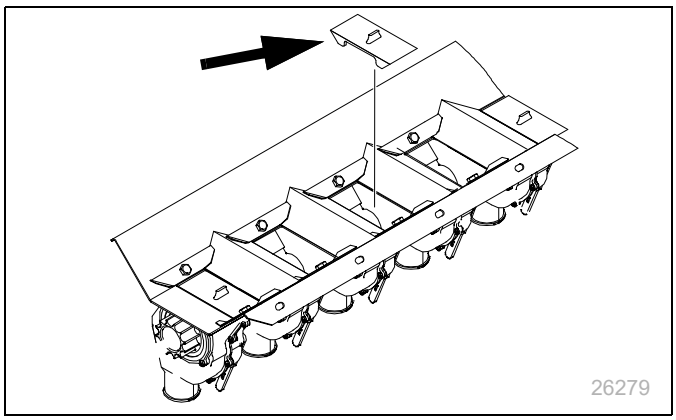

This plug stops seed flow from the main seed box above the meter. Order one per row to be set inactive.

Description	Part Number
Fluted Feed Meter Plug	817-087C

Main Seed Box Accessories

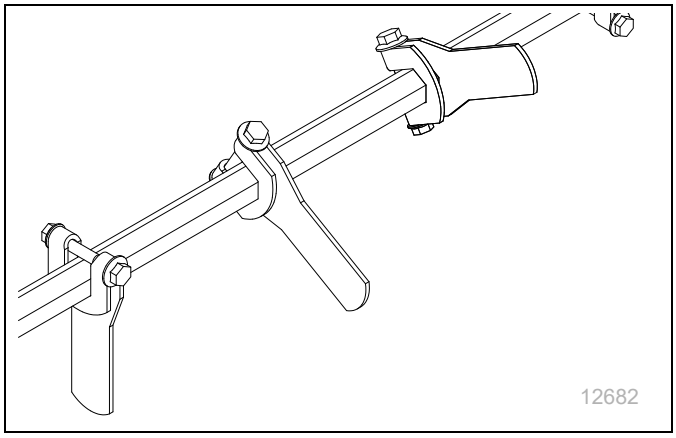

Agitator (Main Seed)

An optional agitator can be added to the main seed box.

It stirs the seed directly above the metering cups, helping prevent bridging of light, fluffy seeds and separating soybeans that are sticky with innoculant.

If your drill is also equipped with a Native Grass attachment, the agitator is available without a drive.

Description	Part Number
Agitator with drive (for drills without Native Grass)	118-750A
Agitator without drive (for drills with native Grass)	118-751A

See “**Main Seed Row Shutoff**” in Seed Rate Manual.

■ Series II Native Grass Attachment

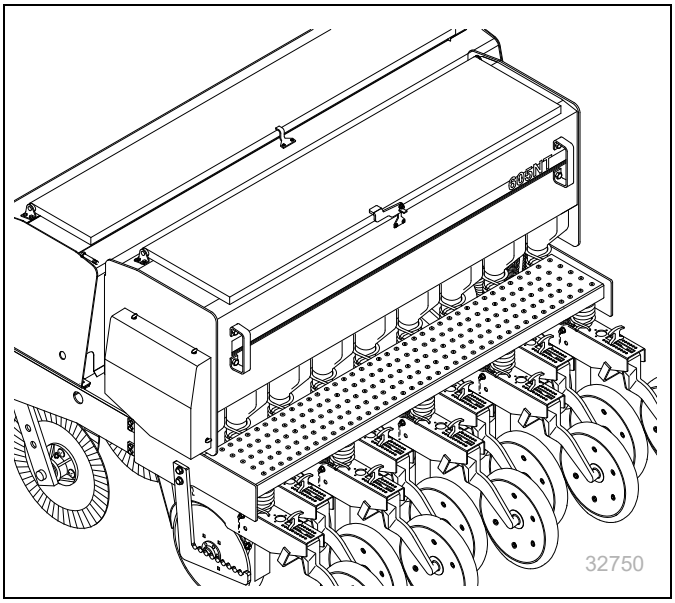

The native grass attachment is designed to seed fluffy, hard-to-plant grasses. It is available as an Option on the original order (Option), or as a field-install kit when ordered with a field-installed Small Seeds Attachment (page 50).

Drill	Configuration	Option
3P606NT	Native Grass Only	(42)
3P606NT	Native Grass and Small Seeds	(43)
606NT	Native Grass Only	(42)
606NT	Native Grass and Small Seeds	(43)

See "**Loading Seed**" on page 22. For seed rates and
adjustments, refer to "**Native Grass Attachment**" in the Seed Rate manual.

Seed Lubricants

Use seed lubricants only in Native Grass planting.

Description	Part Number
Graphite (1 lb / 0.45 kg bottle)	821-042C
Graphite (5 pound / 2.3 kg jug)	821-060C

See "**Loading Seed**" on page 22.

■ Press Wheel Selection

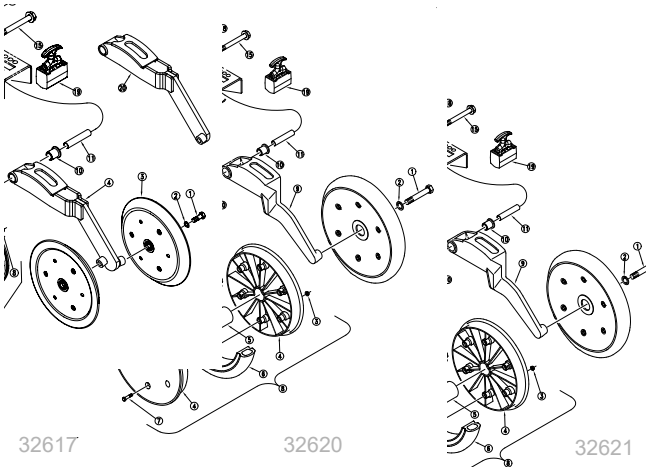

The base drill includes a choice of press wheels. Additional wheels are available, and all may be field-installed.

This manual does not list kit part numbers as the available wheels are often region-specific. Consult your dealer.

Small Seeds Attachment

The Small Seeds (SGS) attachment is designed to meter various small seeds in row. It is driven independently of other boxes on the drill. The standard attachment includes a drive system, 2.4 bushel box, meters and seed tubes.

Field upgrades to Small Seeds are available as:

Drill	Configuration	Opt.	Field Kit
3P606NT	SGS only, for a drill without Native Grass	(40)	133-131A
3P606NT	SGS and NG	(43)	133-132A
606NT	SGS only, for a drill without Native Grass	(40)	133-124A
606NT	SGS and NG	(43)	133-125A

For operation, see: “**Loading Seed**” on page 22 and “**Small Seeds Rate**” in Seed Rate Manual.

Small Seeds Tube Plug

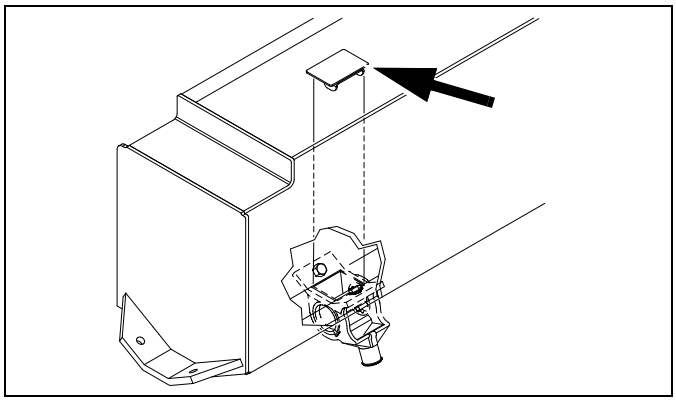

This plug stops seed flow from the small seeds box above the meter. Order one per row to set inactive.

Description	Part Number
SML SDS CUP PLUG	133-315H

See Seed Rate Manual for use.

Small Seeds Partition

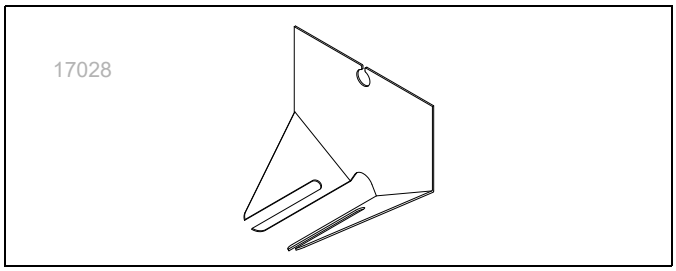

This partition reduces side-to-side seed flow in the small seeds box. This can prevent seed pile-up when drilling across slopes and in other situations where the seed is particularly fluid. Partitions are sold individually. Order quantity desired.

Description	Part Number
RMVBL SMALL SEED BOX PARTITION	123-409D

■ Seed Firmers

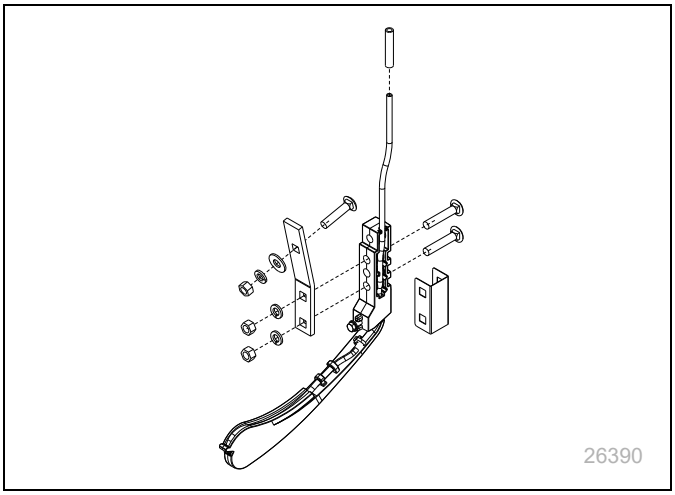

The standard drill includes seed flaps. A choice of firmers is an option in the product bundles, or may be field-installed as kits. Only one type of optional seed firmer may be installed at the same time. Order one firmer kit per opener.

Keeton® Seed Firmer

The optional Keeton® seed firmer is an engineered polymer shape that slides down the seed trench. It traps seeds as they exit the seed tube and firms them into the bottom of the furrow. Order one per row.

Description	Part Number
Keeton® Seed Firmer	890-810C

The Keeton® seed firmer supports low-rate fertilizer delivery. For this use, a liquid fertilizer system must also be installed on the tractor[1].

Seed-Lok® Seed Firmer

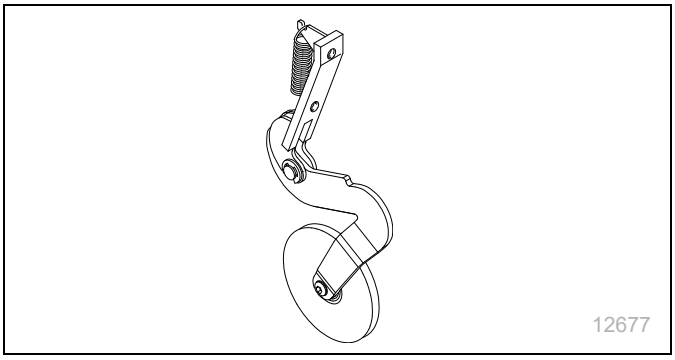

1. The Great Plains PFH accessory hitch is incompatible with the 3P606NT drill due to interference with the ground drive.

The spring-loaded Seed-Lok® firming wheel presses seed directly into the bottom of the seed bed. The Seed-Lok® option provides more even emergence since seeds are planted and firmed at the same depth.

Description	Part Number
Seed-Lok® kit	122-193K

Seed-Lok® can be used on all configurations except Native Grass, unless the Native Grass seed tube is removed during Seed-Lok® use.

For operations, see "**Seed-Lok® Lock-Up (Option)**" on page 37.

Weight Brackets

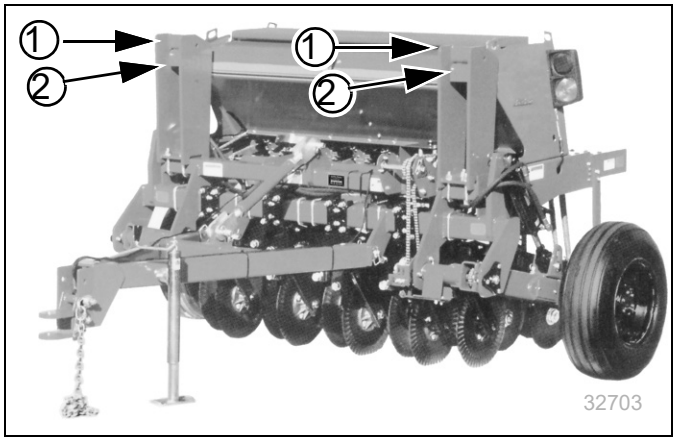

The weight brackets are available as Options on the original order or as field-installed accessories. Weights can be added for additional penetration in no-till conditions. The kit includes two weight brackets two weight bracket adjustment legs, and mounting hardware. Also included are two decal mounts and two amber reflector decals (not shown).

Each weight bracket accepts up to five standard 100 pound (45 kg) "suitcase" style tractor weights.

The kits do not include weights.

Drill	Option	Field Kit
606NT	(66)	151-058A
3P606NT	(66)	151-058A

See the Transporting topic starting on page 18 and "**Frame Weight Adjustment**" on page 30.

Troubleshooting

Problem	Cause	Solution
Uneven seed spacing or uneven stand	Excessive field speed	Reduce field speed.
	Feed cups plugging	Clean out feed cups.
	Seed tubes plugging	Clean out seed tubes.
	Opener discs not turning freely	See “Opener discs not turning freely” in this Troubleshooting section.
	Opener not penetrating low spots	Adjust opener spring (page 34).
	Ground drive wheel slippage	Check frame height. Solution may require drier conditions.
	Seed cups too wide	Use faster Drive Type speed and close feed cup flutes to a more narrow position.
	Chain skipping	Check chain slack and wear.
	Mud build-up on Seed-Lok® wheel	Lock-up Seed-Lok® (page 36) or wait for drier conditions.
Uneven seed depth	Excessive field speed	Reduce field speed.
	Planting conditions too wet	Wait until drier weather.
	Drill not level	Readjust level (page 14).
Opener discs not turning freely	Trash or mud build up on disc scraper	Adjust scraper (page 36)
	Scraper adjusted too tight, restricting movement	Adjust scraper (page 36).
	Failed disc bearings	Replace disc bearings.
	Bent or twisted opener frame	Replace opener frame.
	Planting conditions too wet	Wait until drier weather.
	Too much opener down pressure	If opener discs turn freely by hand but not in field, reduce down pressure (page 36).
	Incorrect press wheel adjustment	Readjust press wheel (page 31).
Actual seed rate different than desired	Incorrect tire pressure	Check tire pressure (page 56).
	Incorrect frame height	Check frame height (page 38).
	Build up of seed treatment in feed cup	Clean out seed treatment from feed cups.
	Incorrect rate adjustment	Check gearbox, sprocket, seed-rate handle and seed door settings. Perform calibration if not already done. See Seed Rate Manual.
Excessive seed cracking	Excessive field speed	Reduce field speed.
	Feed cup flutes not open enough	Open feed cups to a wider position. See Seed Rate Manual.
	Feed cup door handle not open enough	Open feed cup door handle to a lower position. See Seed Rate Manual.
Press wheels not compacting soil as desired	Too wet or cloddy	Wait until drier weather or rework ground.
	Press wheel depth does not match coulter depth	Readjust press wheel depth (page 38).
	Not enough down pressure on disc openers	Increase down pressure on openers (page 34).

Problem	Cause	Solution
Boxes not emptying evenly	Some boxes do not have same number of feed cups between each divider of bulkhead.	Load more material than required. Re-distribute when re-loading.
	Main box seed cup door setting	Set all doors the same, per seed size.
	Seed plug(s) installed	Remove seed plug(s).
	Meter or tube blocked	Clear blockage.
Press wheel or openers plugging	Planting conditions too wet	Wait until drier weather.
	Too much down pressure on openers	Reduce down pressure on openers (page 34).
	Backed up with drill in the ground	Clean out and check for damage.
	Failed disc bearings	Replace disc bearings.
	Scraper worn or damaged	Replace scraper.
Feed cup sprockets locked up or twisted feed cup drive shaft	Foreign matter lodged in one or more feed cup sprockets	Clean out feed cup sprockets. Use clean seed.
	Dried liquid insecticide inside feed cups	Remove build up by disassembling each feed cup and scraping foreign substance from turn surfaces.
Coulters not going deep enough	Not enough down pressure	Adjust coulters when a few rows are involved (page 32). Add weight when all rows are affected (page 30).
	Row down pressure set too high (reducing weight available to coulters)	Reduce row down pressure to standard (page 34). Set coulters to prepare furrow more aggressively (page 31).
Coulters and drill going too deep	Coulters set too deep or spring force too high	See page 31 for correct adjustment.
	Incorrect press wheel adjustment	Set press wheels to a shallower depth.
Coulters and openers plugging in no-till conditions		Drill at a slight angle to rows.
Small seeds box not emptying evenly	Adjustable divider not set evenly	Move adjustable divider to create more volume in areas that run out first.
Chain fouling	Debris in retainer clip	Be sure retainer clip is facing opposite way of chain travel (page 42).
Acremeter inaccurate	Excess wheel slippage	Check frame height. If correct, solution may be to wait for drier conditions.
	Passes misaligned	Check that planting passes are not leaving gaps (under-reporting area) or causing overlap (over-reporting area).
	Wheel slippage is varying from nominal	If variance is consistent, develop a correction factor for your conditions.
	Check that acremeter is for your drill.	Activate display. Lower left corner must be: 3P606NT: 913.0 Revs/ac (2256.1 Revs/ha) 606NT: 995.0 Revs/ac (2458.7 Revs/ha) Contact dealer if otherwise.
	Acremeter battery failing	Replace acremeter (page 24). Unit is sealed and battery is not replaceable.

Warranty

LIMITED WARRANTY

TERMS AND CONDITIONS (U.S. ONLY)

1. Great Plains (a division of the Kubota Corporation) warrants to the original purchaser that this Great Plains unit will be free from defects in material and workmanship for a period of one year from the first use date.
2. These terms apply when machine is used as intended and under normal service and conditions for personal use; ninety days for custom/commercial or rental use.
3. This warranty is limited to the replacement of any defective part by Great Plains and the installation by the dealer of any such replacement part. Great Plains reserves the right to inspect any equipment or part which are claimed to have been defective in material or workmanship.
4. No other warranty of any kind whatsoever - expressed or implied - is made with respect to this sale; and all implied warranties of merchantability and fitness for a particular purpose which exceed the obligations set forth in this written warranty are hereby disclaimed and excluded from this sale.
5. This warranty does not extend to crop loss, losses caused by planting or harvest delays or any expense or loss of labor, supplies, rental machinery, or for any other reason.
6. This warranty may be voided if the unit is towed at speeds in excess of 20 miles per hour (32 kilometers per hour), or is used in soils with rocks, stumps, or other obstructions.
7. This warranty shall not be interpreted to render Great Plains liable for damages of any kind, direct or consequential or contingent to property.
8. Great Plains does not cover the following items and/or conditions:
   a. failures resulting from abuse or misuse of the equipment,
   b. failures occurring as a result of accidental damage or acts of God,
   c. failures resulting from alterations or modifications, failures caused by lack of normal maintenance as outlined in the operator’s manual or repairs made by non-authorized personnel,
   d. items replaced or repaired due to normal wear (such as wear items and ground engaging components),
   e. repeat repair due to improper diagnosis or repair by the dealer, temporary repairs, service calls and/or mileage to and from customer location, overtime premium, or unit hauling expenses, or
   f. damages resulting from any cause beyond Great Plains control.
   g. Great Plains reserves the right to make changes in materials or design of the product at any time without notice.

This warranty is not valid unless the unit is registered with Great Plains within 10 days from the date of the original purchase.

Appendix A - Reference Information

Drill Model	3P605NT-0975	3P606NT-0975	605NT-0975	606NT-0975
Row Count	9		9	
Row Spacing	7.5 in. (19.1 cm)		7.5 in. (19.1 cm)	
Swath	67.5 in. (171.5 cm)		67.5 in. (171.5 cm)	
Transport Width	6 ft. 1/2 in. (72.5 in., 184.2 cm)		8 ft 10 in. (106.0 in., 269.2 cm)	
Length	5 ft 1 in. (61.0 in., 154.9 cm)		11 ft 5 in. (137.0 in., 348.0 cm)	
Working Height	5 ft 1 in. (61.0 in., 154.9 cm)		5 ft 1 in. (61.0 in., 154.9 cm)	
Transport Clearance	Depends on tractor hitch		14.0 in. (35.6 cm)	
Weight, Maximum, Empty[1]	2280 lbs. (1034 kg)		2700 lbs. (1225 kg)	
Weight, Maximum, Full	4230 lbs. (1919 kg)		4600 lbs. (2087 kg)	
Tongue Weight, Transport	NA		366 lb (166 kg)	
Tongue Weight, Field	NA		416 lb (189 kg)	
Main Seed Box Capacity	12 bu. (423 liter)		12 bu. (423 liter)	
Native Grass Box Capacity	6 bu. (211 liter)		6 bu. (211 liter)	
Small Seeds Box Capacity	1.44 bu. (51 liter)		1.44 bu. (51 liter)	
Seed Box Agitator	Optional in Main Seed box, Standard in Native Grass box			
Min. Tractor HP Req.[2]	60 hp (45 Kw)		40 hp (30 Kw)	
Hitch Type	Category II		Clevis or Pintle	
Hydraulic Circuits Req.	None		1	
Tire Size	5.70L x 8 Lug Type		9.5L x 15 8-Ply	7.00-15 LT
Operating Depth	0 to 3.5 in. (0 to 8.9 cm)		0 to 3.5 in. (0 to 8.9 cm)	

1. See “Transporting” topic for typical weights of various configurations.

2. Power requirements vary significantly with conditions and practices.

■ Tire Information

Tire Size	Inflation
5.70L-8 Lug Type, 715 lb (324 kg) load rating	50 psi 345 kPa
7.00-15 LT 2040 lb (925 kg) load rating	60 psi 414 kPa

Tire Warranty Information
All tires are warranted by the original manufacturer of the tire. Tire warranty information is found online at the manufacturer’s websites listed below. For assistance or information, contact your nearest Authorized Farm Tire Retailer.

Manufacturer	Website
Firestone	www.firestoneag.com
Goodyear	www.goodyearag.com
Titan	www.titan-intl.com
BKT	www.bkt-tires.com
Gleason	www.gleasonwheel.com

Torque Values Chart

Bolt Size	Bolt Head Identification					
	Grade 2		Grade 5		Grade 8	
in-tpi[a]	N-m[b]	ft-lb[d]	N-m	ft-lb	N-m	ft-lb
1/4-20	7.4	5.6	11	8	16	12
1/4-28	8.5	6	13	10	18	14
5/16-18	15	11	24	17	33	25
5/16-24	17	13	26	19	37	27
3/8-16	27	20	42	31	59	44
3/8-24	31	22	47	35	67	49
7/16-14	43	32	67	49	95	70
7/16-20	49	36	75	55	105	78
1/2-13	66	49	105	76	145	105
1/2-20	75	55	115	85	165	120
9/16-12	95	70	150	110	210	155
9/16-18	105	79	165	120	235	170
5/8-11	130	97	205	150	285	210
5/8-18	150	110	230	170	325	240
3/4-10	235	170	360	265	510	375
3/4-16	260	190	405	295	570	420
7/8-9	225	165	585	430	820	605
7/8-14	250	185	640	475	905	670
1-8	340	250	875	645	1230	910
1-12	370	275	955	705	1350	995
1 1/8-7	480	355	1080	795	1750	1290
1 1/8-12	540	395	1210	890	1960	1440
1 1/4-7	680	500	1520	1120	2460	1820
1 1/4-12	750	555	1680	1240	2730	2010
1 3/8-6	890	655	1990	1470	3230	2380
1 3/8-12	1010	745	2270	1670	3680	2710
1 1/2-6	1180	870	2640	1950	4290	3160
1 1/2-12	1330	980	2970	2190	4820	3560

Bolt Size	Bolt Head Identification					
	5.8 Class 5.8		8.8 Class 8.8		10.9 Class 10.9	
mm x pitch[c]	N-m	ft-lb	N-m	ft-lb	N-m	ft-lb
M 5 X 0.8	4	3	6	5	9	7
M 6 X 1	7	5	11	8	15	11
M 8 X 1.25	17	12	26	19	36	27
M 8 X 1	18	13	28	21	39	29
M10 X 1.5	33	24	52	39	72	53
M10 X 0.75	39	29	61	45	85	62
M12 X 1.75	58	42	91	67	125	93
M12 X 1.5	60	44	95	70	130	97
M12 X 1	90	66	105	77	145	105
M14 X 2	92	68	145	105	200	150
M14 X 1.5	99	73	155	115	215	160
M16 X 2	145	105	225	165	315	230
M16 X 1.5	155	115	240	180	335	245
M18 X 2.5	195	145	310	230	405	300
M18 X 1.5	220	165	350	260	485	355
M20 X 2.5	280	205	440	325	610	450
M20 X 1.5	310	230	650	480	900	665
M24 X 3	480	355	760	560	1050	780
M24 X 2	525	390	830	610	1150	845
M30 X 3.5	960	705	1510	1120	2100	1550
M30 X 2	1060	785	1680	1240	2320	1710
M36 X 3.5	1730	1270	2650	1950	3660	2700
M36 X 2	1880	1380	2960	2190	4100	3220

a. in-tpi = nominal thread diameter in inches-threads per inch

b. N· m = newton-meters

c. mm x pitch = nominal thread diameter in mm x thread pitch

d. ft-lb = foot pounds

Torque tolerance + 0%, -15% of torquingvalues. Unless otherwise specified use torquevalues listed above. 25199

Hydraulic Diagram

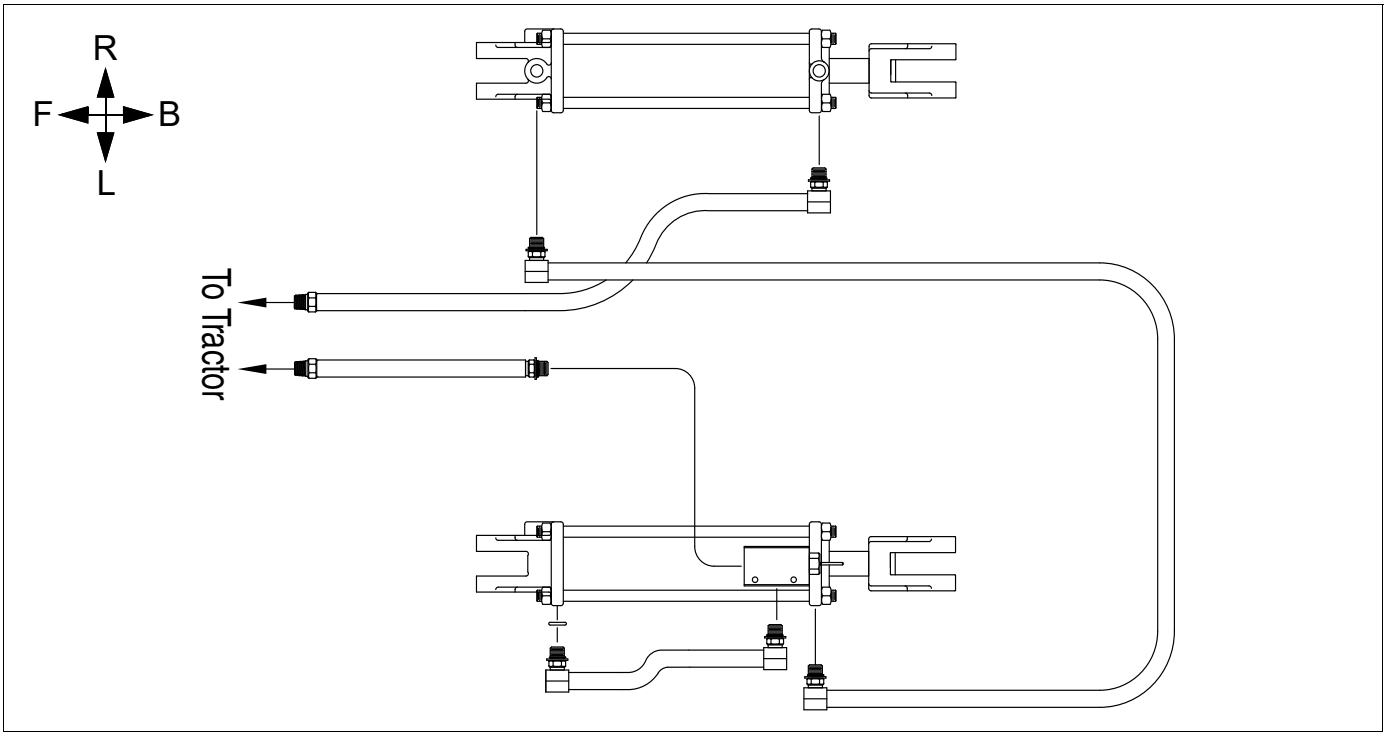

18676

606NT Hydraulic Diagram

■ Drive System Diagrams

3P606NT Drives

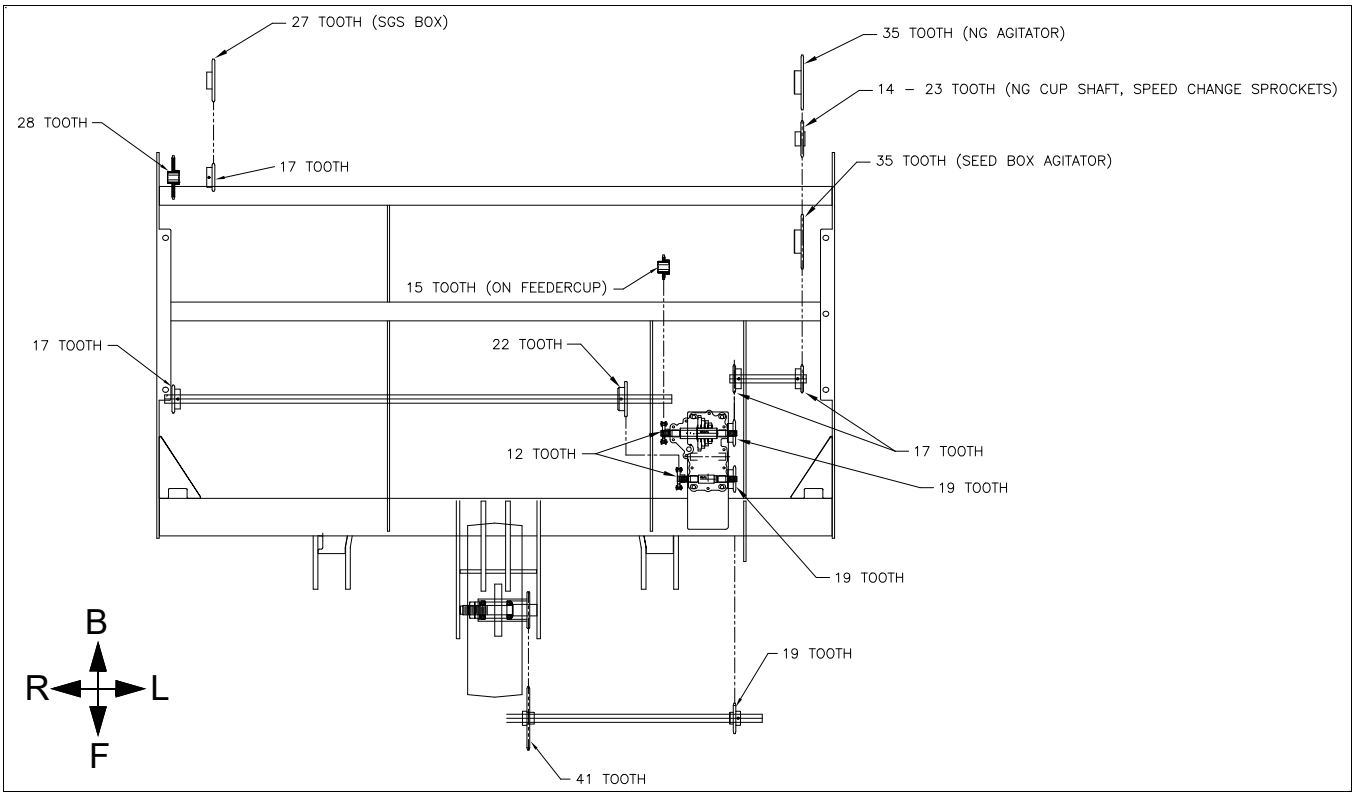

23213

3P606NT Maximum Configuration

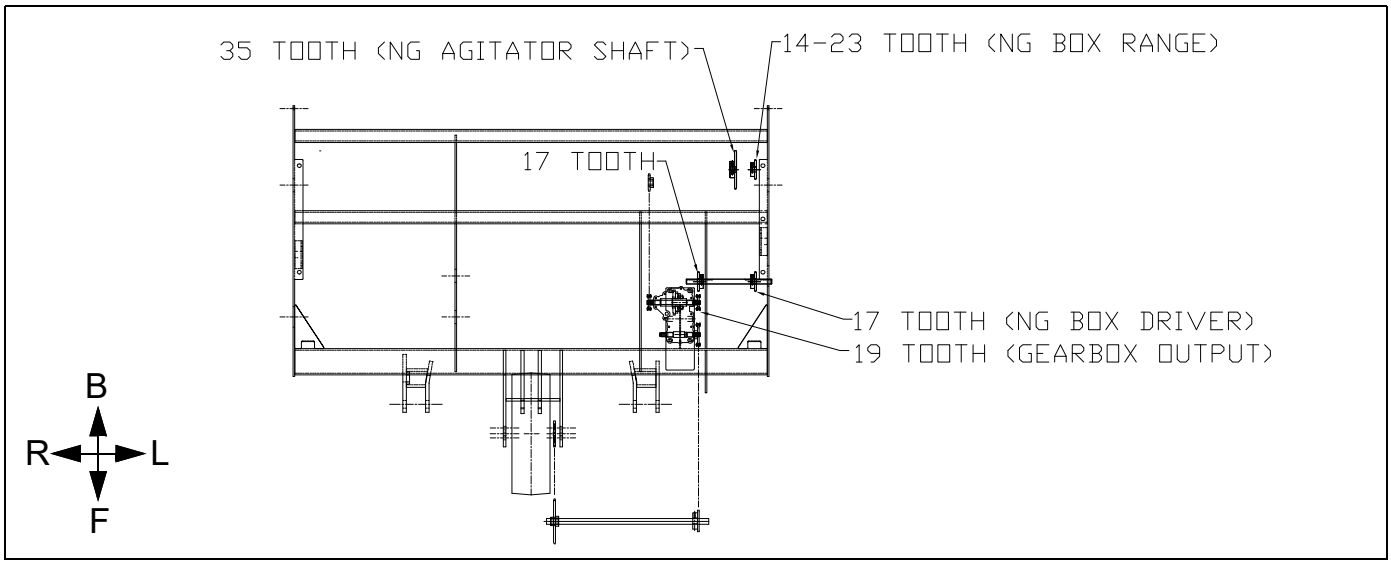

23110

3P606NT Native Grass (Option)

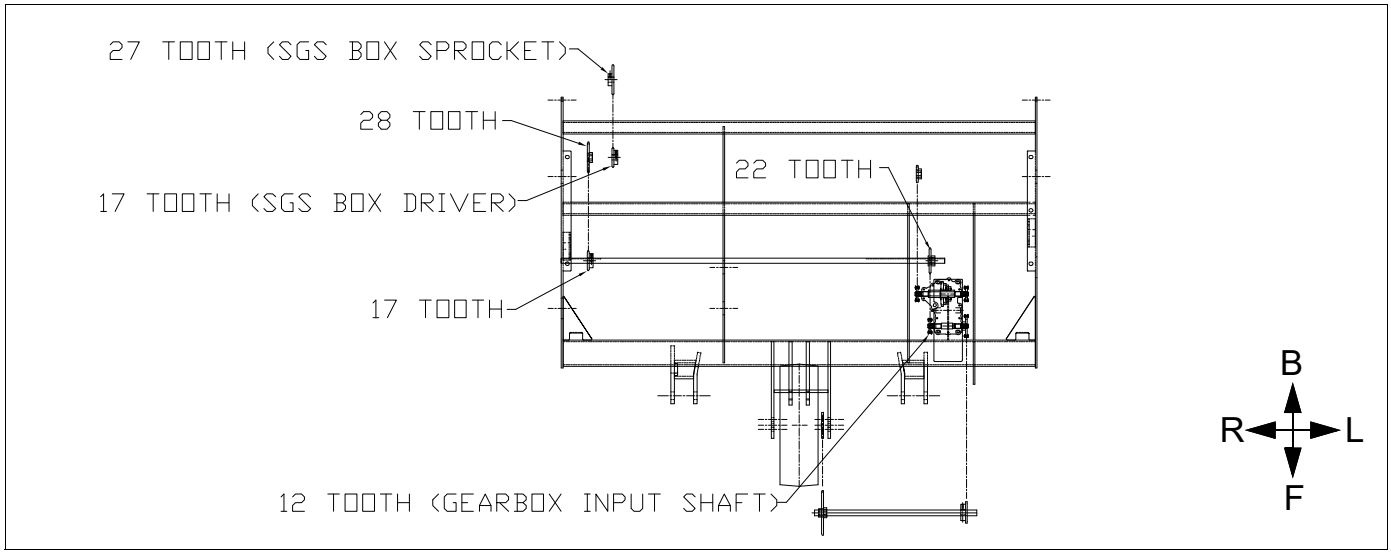

3P606NT Small Seeds (Option)

23110

606NT Drives

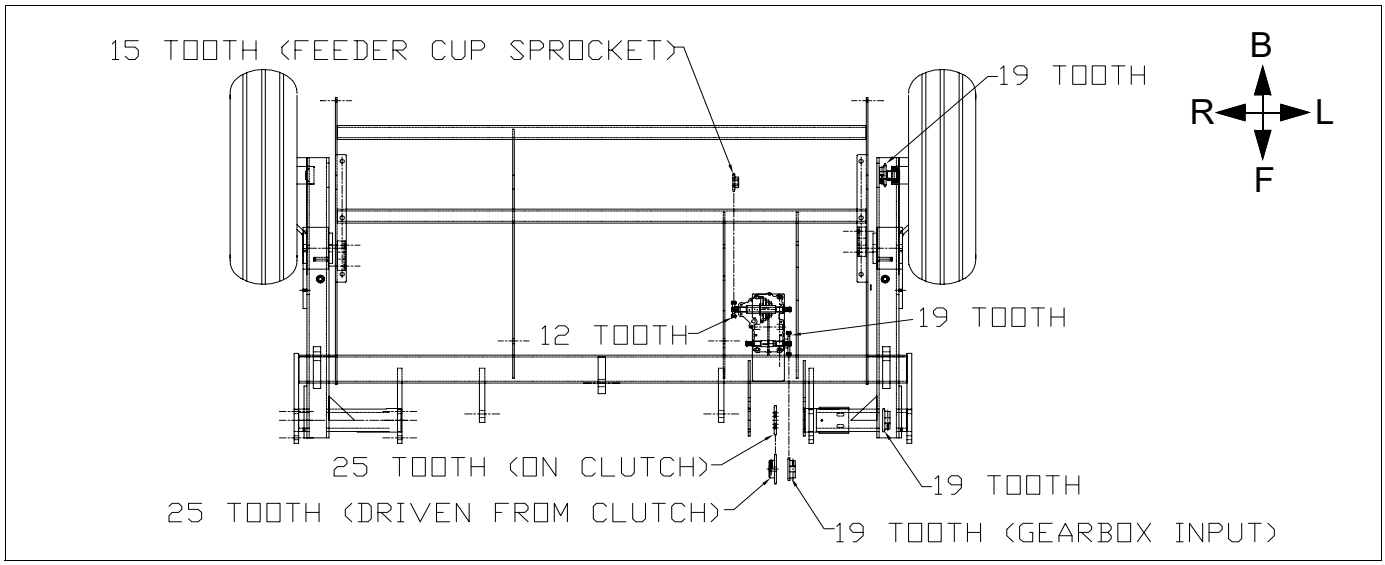

606NT Main Seed Box

23112

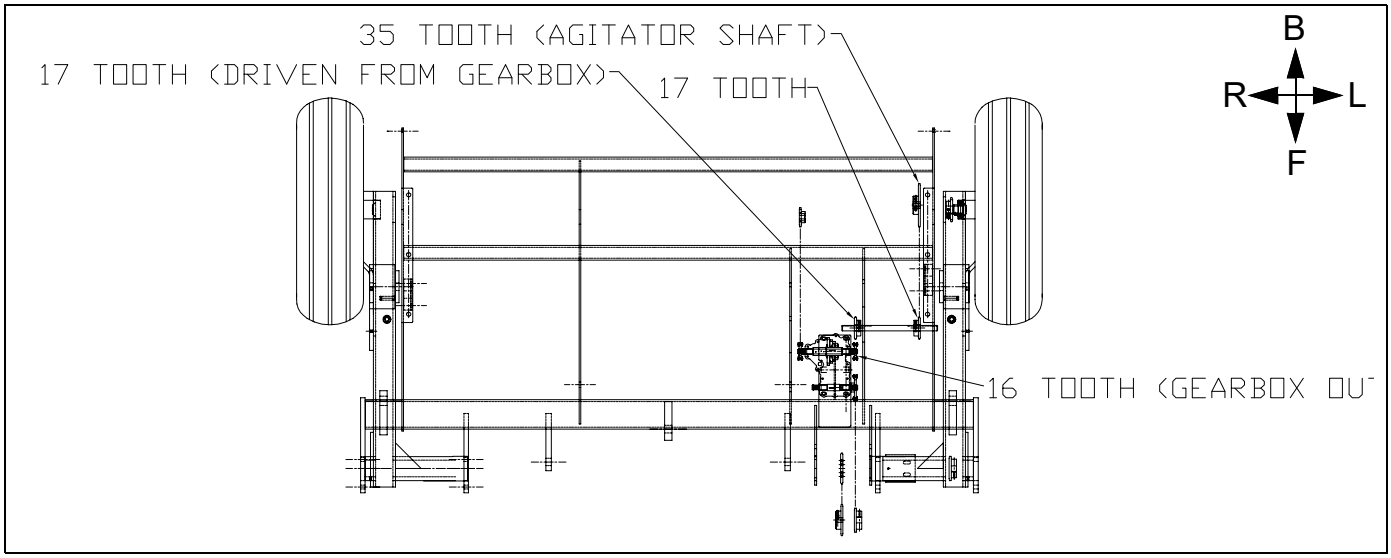

606NT Main Seed Box Agitator (Option)

23112

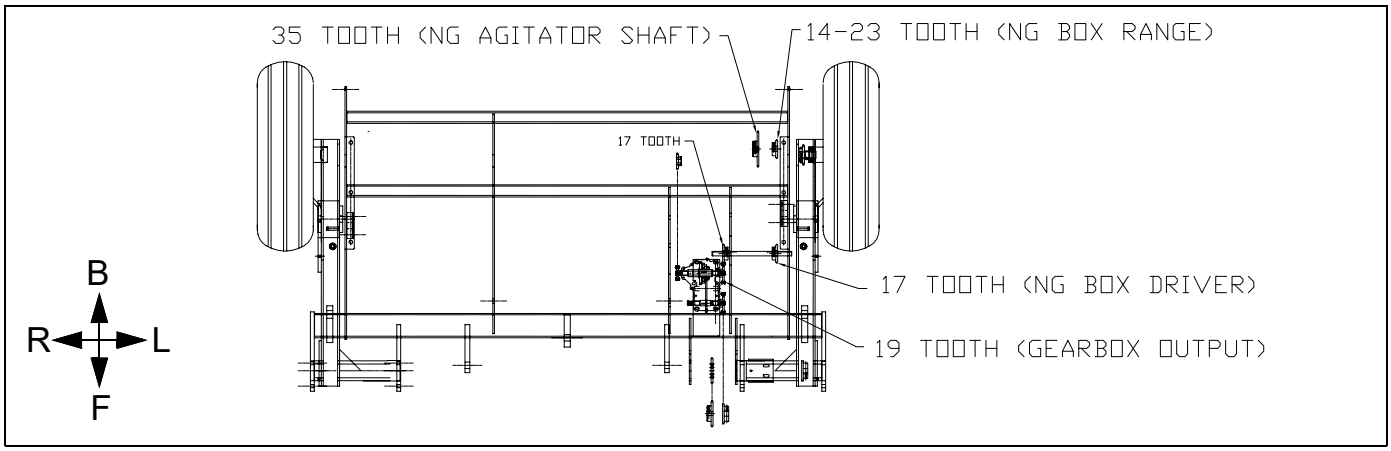

606NT Native Grass (Option)

23109

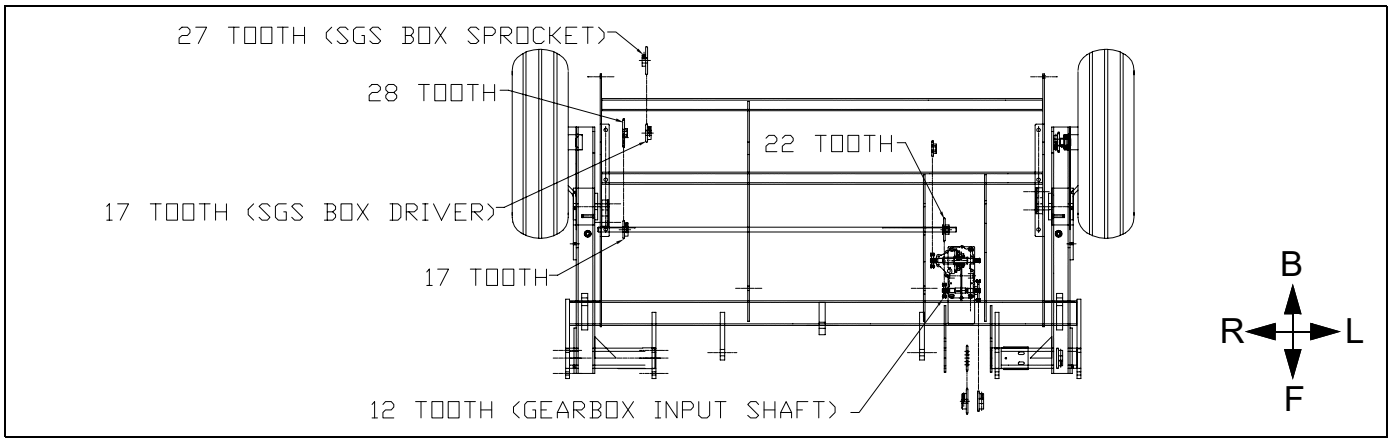

606NT Small Seeds Drive (Option)

23109

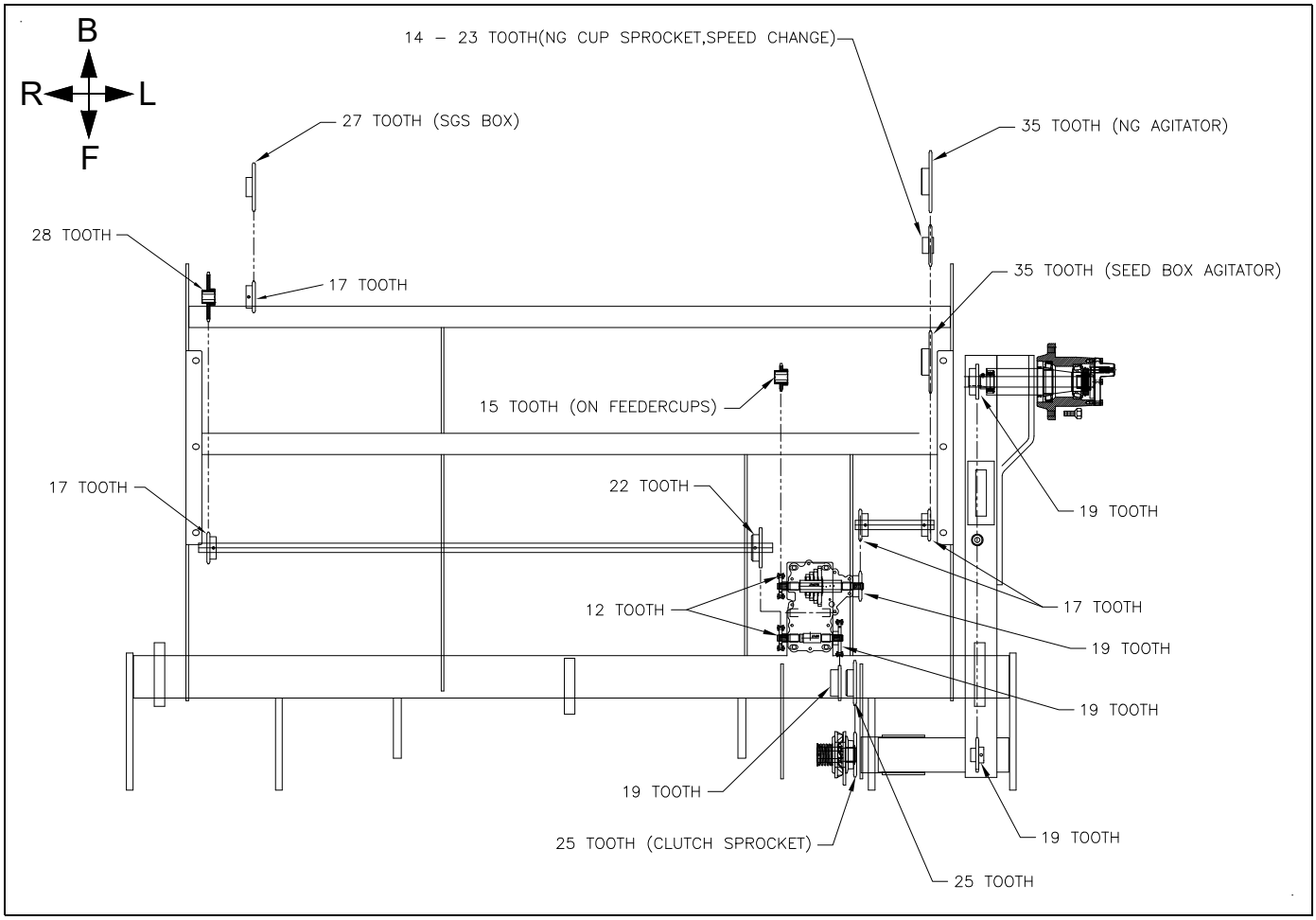

23212

606NT Maximum Configuration

■ Native Grass Drive Chain Routing

3P605NT, 3P606NT, 605NT, 606NT

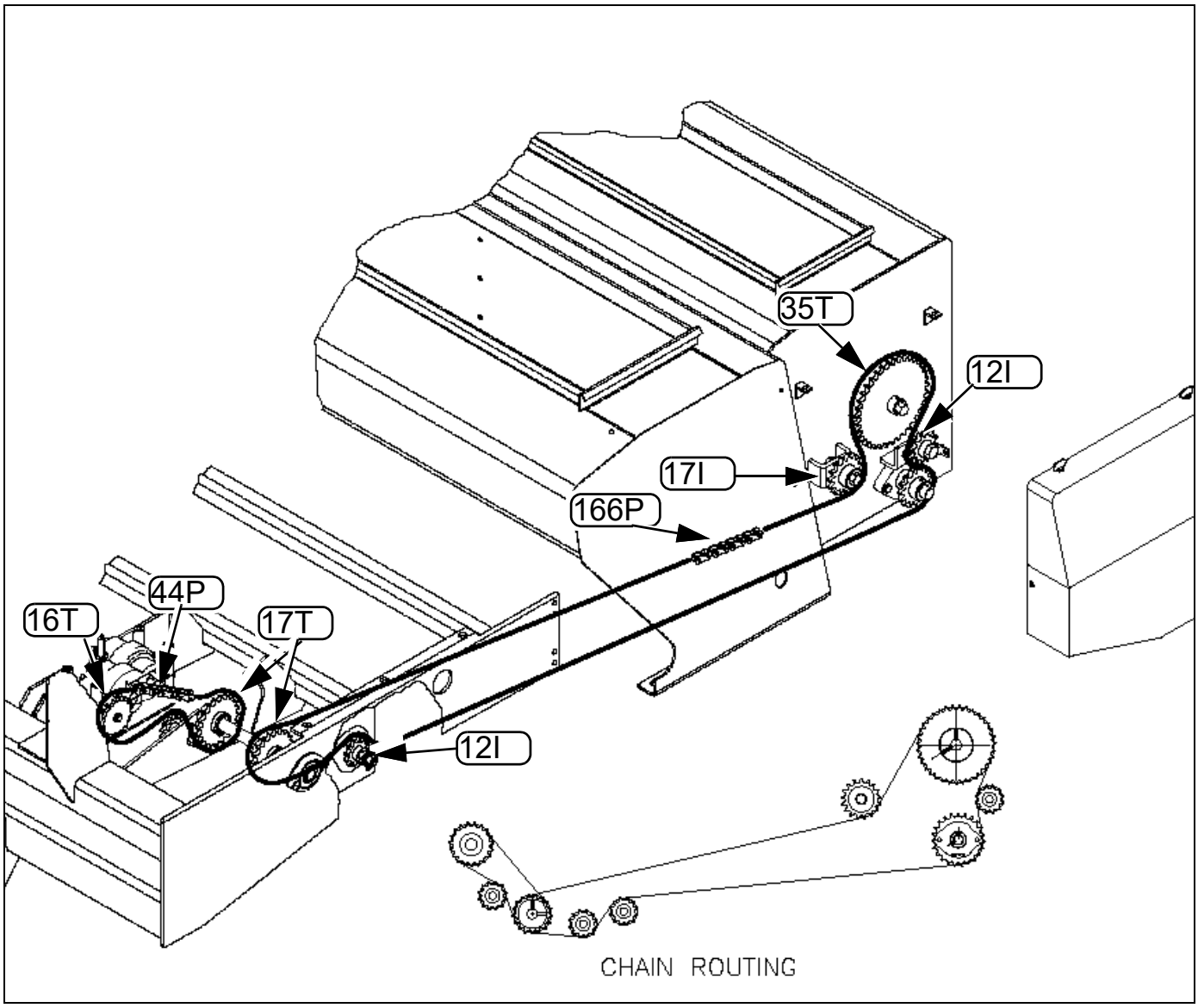

■ Small Seeds Drive Chain Routing

3P605NT, 3P606NT, 605NT, 606NT

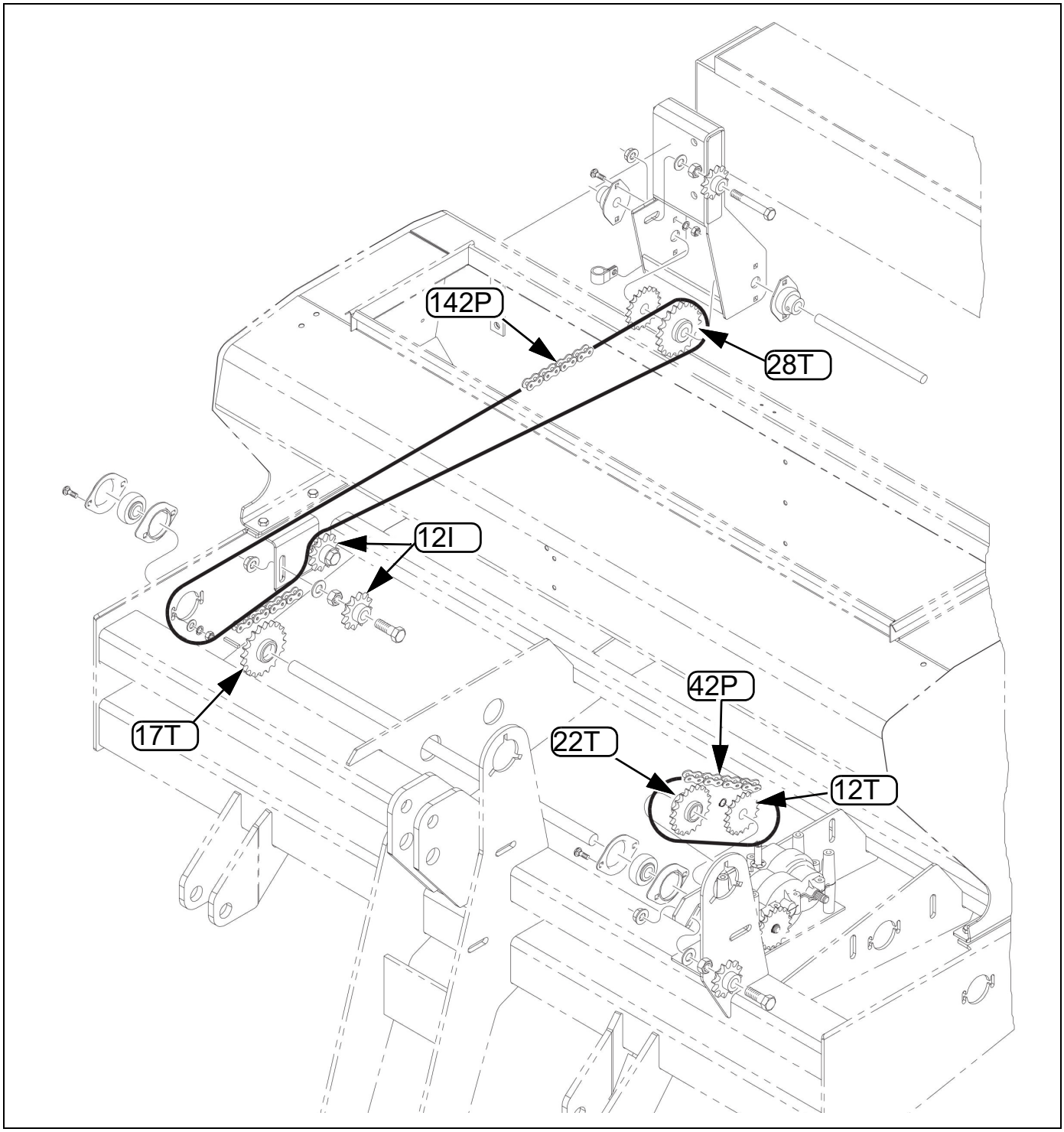

■ Agitator Drive Chain Routing

3P605NT, 3P606NT. 605NT, 606NT

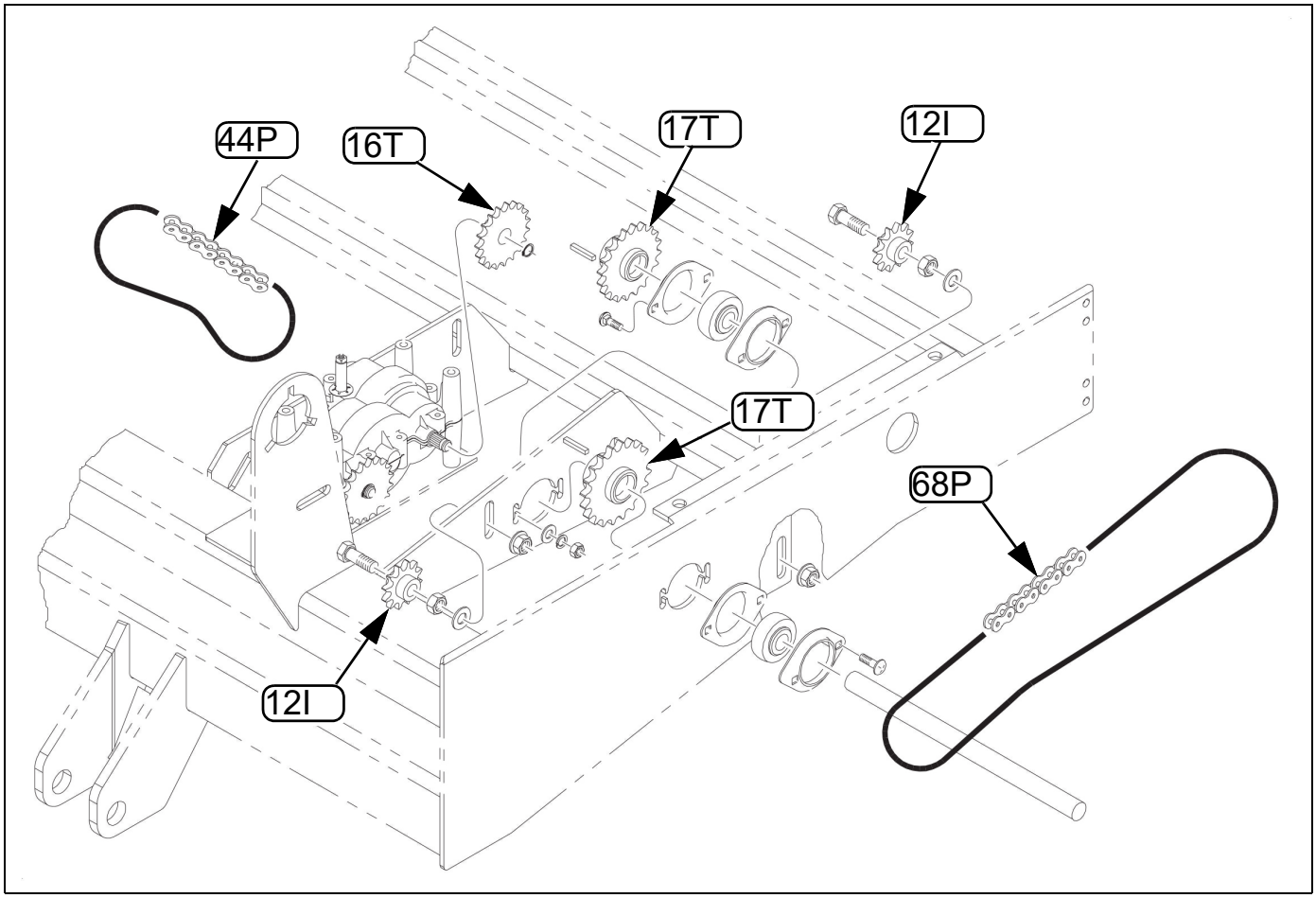

■ Seed Box Chain Routing

3P605NT, 3P606NT

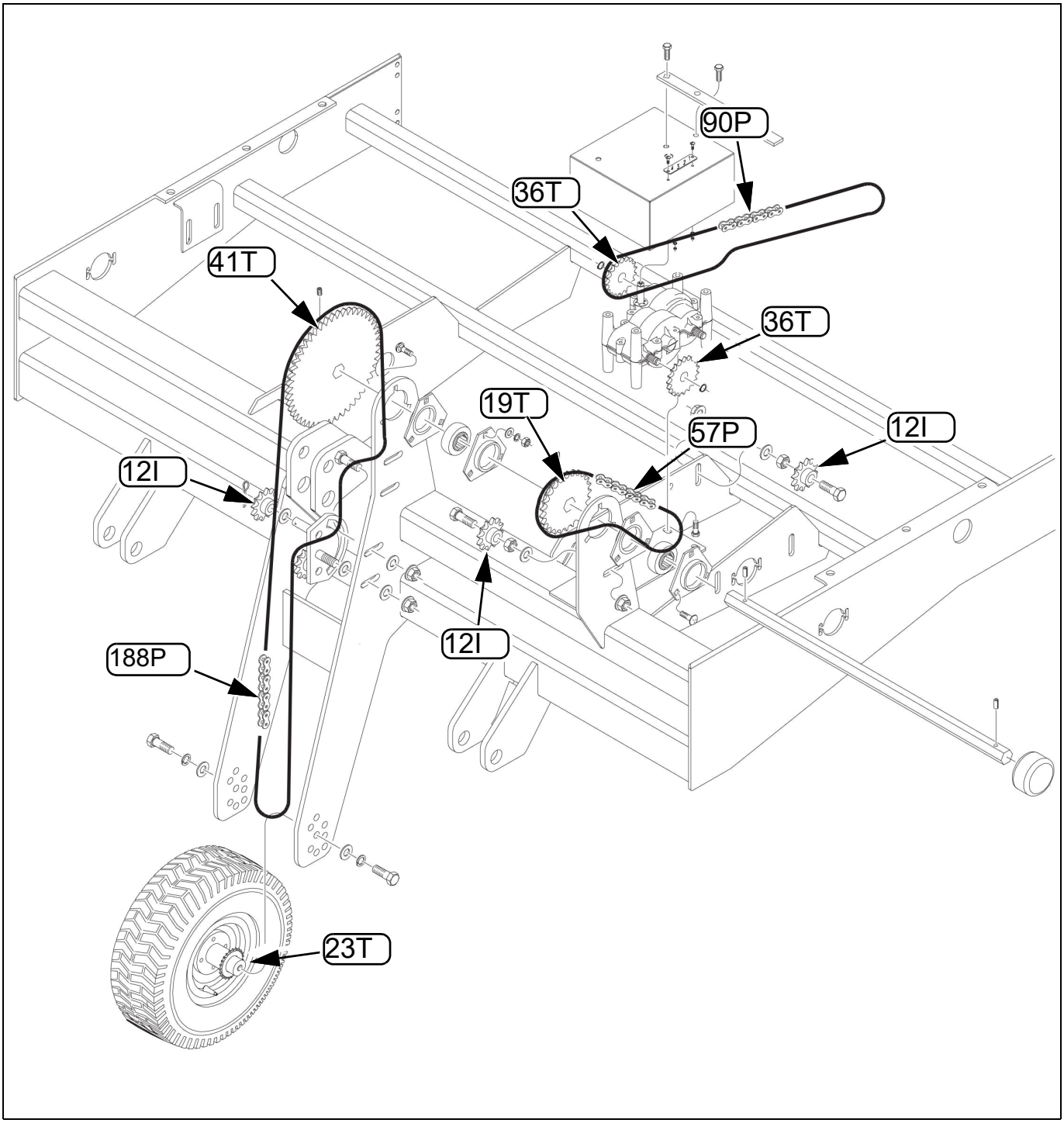

■ Drive Chain Routing

605NT, 606NT

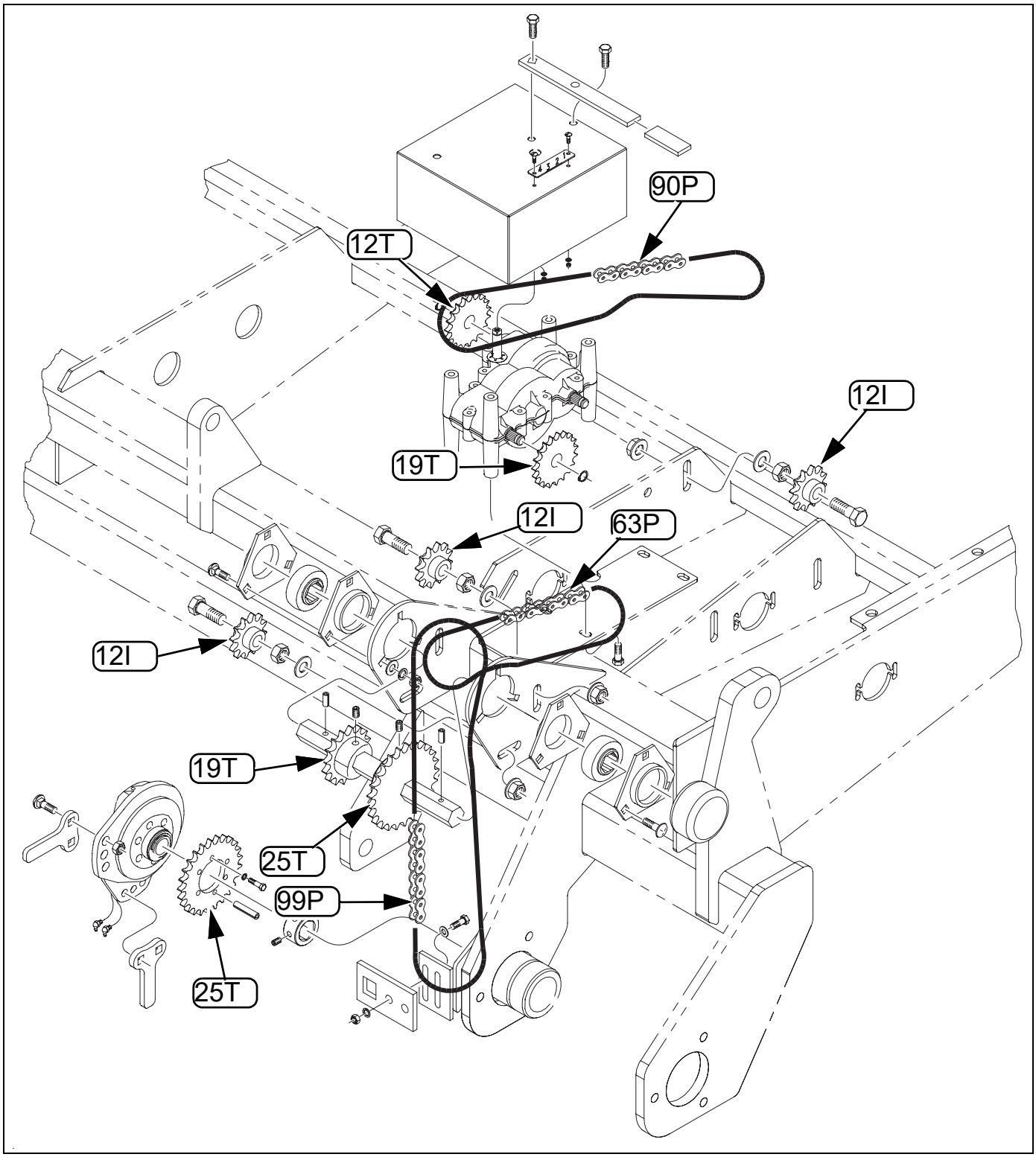

■ Gauge Wheel Drive Chain Routing

605NT, 606NT

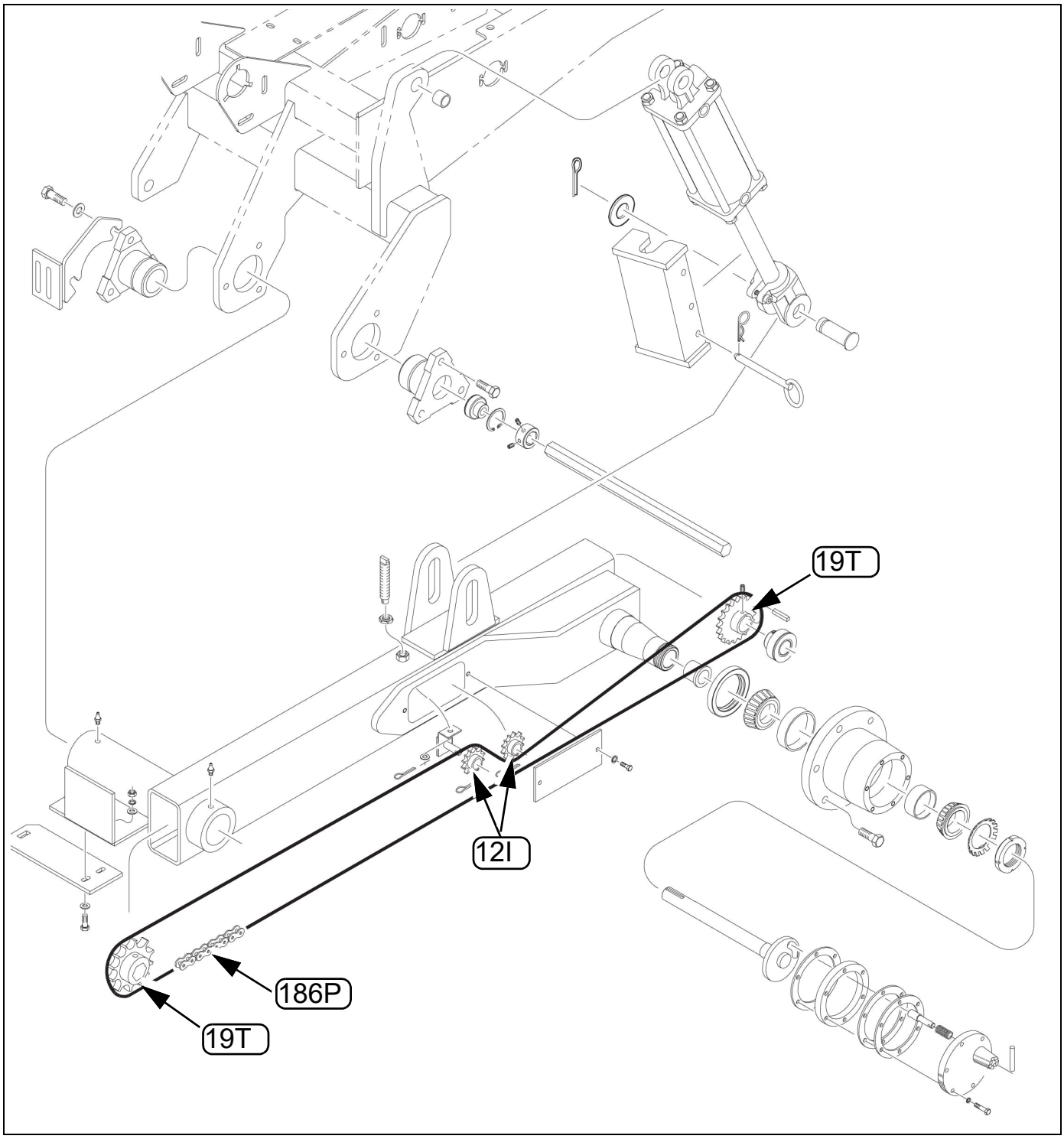

Appendix B - Pre-Delivery

This section covers dealer requirements for assembly. As the dealer, it is your responsibility to unload, assemble and prepare the drill for use.

The drill is shipped via flat bed truck. Unload all equipment before beginning assembly. Do not attempt any assembly work while the drill is on the truck.

The following sections are step-by-step instructions for assembling the drill. Begin with *Tools Required* and *Pre-Assembly Checklist* to ensure you have all necessary parts and equipment at hand. Then proceed with *Install Gauge Wheels*. Follow each step to make the job as quick and safe as possible and produce a properly working machine.

■ Tools Required

- Properly rated forklift with 3-pt adapter to lift the drill, or two forklifts with the properly rated combined capacity for the drill, or overhead hoist, or loader with 6,500-pound capacity
- Hand jack
- General hand tools
- Jack stands, blocks and safety chain

■ Pre-Assembly Checklist

1. Read and understand "**Safety Information**" on page 3 before assembling.
2. Have at least two people on hand while assembling.
3. Make sure the assembly area is level and free of obstructions (preferably an open concrete area).
4. Have all major components.
5. Have all fasteners and pins shipped with the drill.

Note: If a pre-assembled part or fastener is temporarily removed, remember where it goes. Keep the parts separated.

6. Have a copy of the parts manual on hand. If unsure of proper placement or use of any part or fastener, refer to the parts manual.
7. Check that all working parts are moving freely, bolts are tight, and cotter pins are spread.
8. Check for proper tension and alignment on all drive chains.
9. Check that all safety labels and reflectors are correctly located and legible. Replace if improperly located or damaged. Refer to *Safety Labels*, **"Safety Information"** in the operator's manual.
10. Inflate tires to recommended pressure as listed on the *Tire Inflation Chart* on "**Appendix A"** on page 56. Tighten wheel bolts as specified on *Torque Values Chart* on "**Appendix A"** on page 57.

Unloading Location Requirements

Until unloaded, the drill cannot be moved using a tractor. The drill needs to be unloaded directly above the spot where final assembly takes place:

- On a flat, level, and dry surface,
- With adequate space to pull the trailer out from under the lifted drill without turns,
- With adequate space at the front and rear of the drill to easily maneuver forklifts
- With at least 10 ft. (3 m) clearance behind the press wheels,
- With tractor access in front.

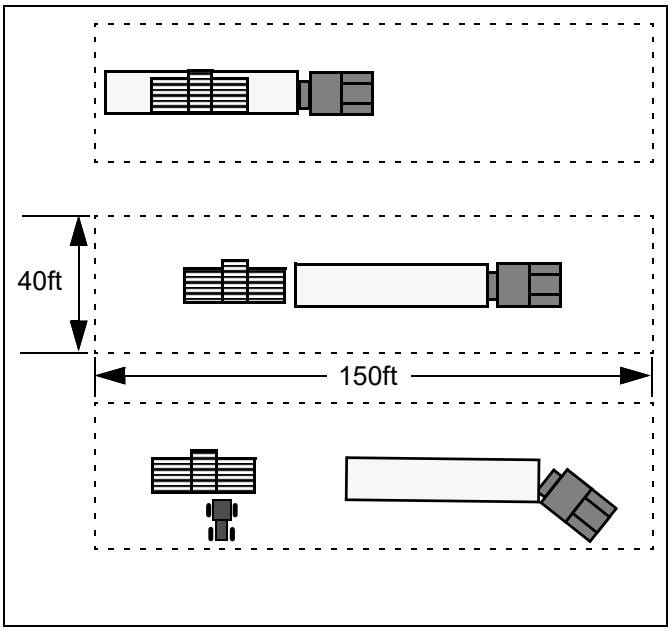

Suggested Unload Clearances

Unloading

Crushing Hazard:

Keep all bystanders away from unloading area. Use properly rated forklifts for unloading drill from trailer.

1. Unload all miscellaneous crates first. Place them well out of the area needed for unloading the drill.
2. If using two forklifts, position one forklift at the front and one at the rear of the drill.

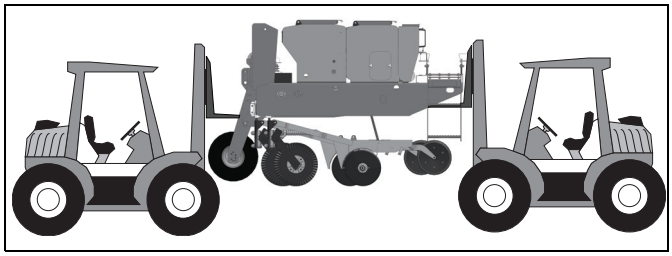

- On the front forklift, position the forks between two openers, under the front frame tube.
- On the rear forklift, position the forks under the rear frame tube.

Machine Damage Risk:

Do not use straps to unload the drill. Lift the drill by the frame tubes only. Do not lift the drill by the seed cups or seed cup channels.
Make sure the forklift forks are located between openers on the front frame tube.

3. Slowly lift the drill off the trailer bed.
4. Stop lifting about 12 inches off the trailer bed.
5. Slowly pull the trailer straight out from under the drill.
6. Making sure to keep the drill level front-to-back and side-to-side, slowly lower the drill to the ground 12 inches off the ground.
7. Remove nuts and u-bolts from the two shipping stands (3).

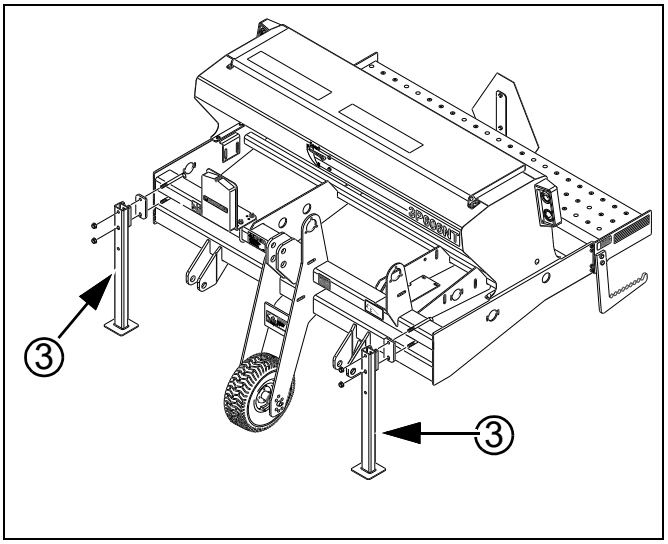

Shipping Stands 80451

8. Remove shipping stands and rubber pads from the drill.
9. Slowly lower the drill to the ground.
10. Lower the forks and withdraw forklifts.

■ Attach Meter Hoses at Rows

All meter hoses are shipped disconnected at the row units. Clamps are shipped inside a seed box. The opener frame has openings for up to three material hoses:

- The forward hole ⓕ is always used for the seed delivery tube for the main seed box.
- The center hole ⓒ is used for Native Grass, if installed.
- The rear hole ⓡ is used for Small Seeds, if installed.

Start with the left row unit (row 1). For each row:

Main Seed Hose

Select one:

(17) 800-008C CLAMP HOSE 1 1/2 NO. 24

Open the clamp (17). Place it onto the outlet end of the hose (39), up against the ribs. Slide the outlet end of the hose fully onto the seed tube inlet (43) at the forward row unit opening ⓕ. Move the clamp to just below the raised lip of the seed tube inlet.

- These items are normally completed by the dealer prior to delivery.

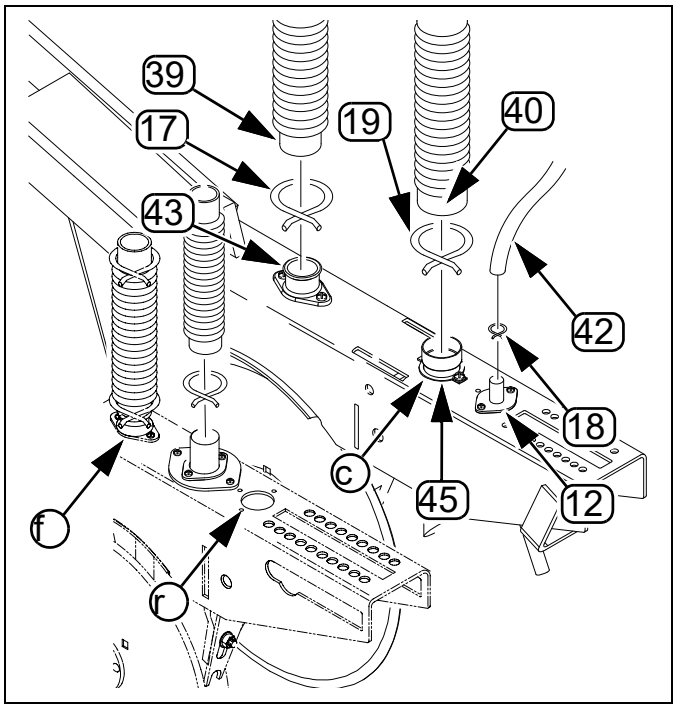

Seed and Native Grass Hoses 32683

Native Grass Hose

Select one:

(19) 800-346C CLAMP HOSE 2 5/8 #42

Open the clamp (19). Place it onto the outlet end of the hose (40), up against the ribs. Slide the outlet end of the hose fully onto the native grass tube inlet (45) at the center row unit opening ⓒ. Move the clamp to halfway onto the hose neck.

Small Seeds Hose

Select one:

(18) 800-321C HOSE CLAMP NO.12 3/4 ID

Open the clamp (18). Place it onto the outlet end of the hose (42), up against the ribs. Slide the outlet end of the hose fully onto the small seeds tube inlet (12) at the rear row unit opening ⓡ. Move the clamp to halfway onto the hose neck.

■ Install SMV Reflector

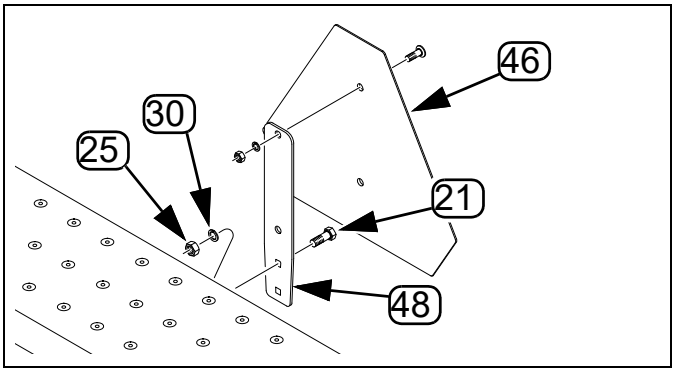

SMV Reflector 32648

The SMV reflector (46) is shipped pre-assembled to the mount (48), but mounted inverted on the walkboard. The SMV must be repositioned to upright to prevent contact with row units during operation.

Remove and save two sets:

(21) 802-007C HHCS 5/16-18X3/4 GR5

(30) 804-009C WASHER LOCK SPRING 5/16 PLT

(25) 803-008C NUT HEX 5/16-18 PLT

Orient the reflector assembly (48) upright, and red/orange reflective side to rear. Secure mount (48) to walkboard with bolts (21), lock washers (30) and nuts (25).

Appendix C - Accessory Installation

■ Carbide Disc Scraper Installation

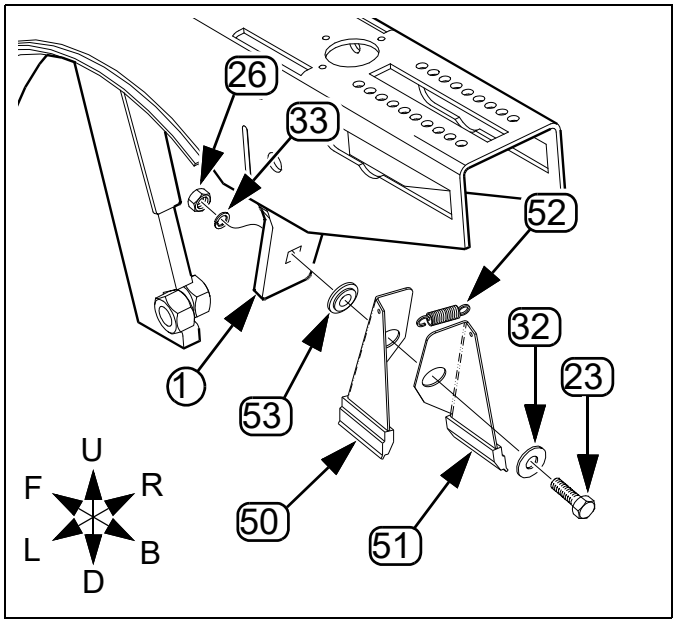

Carbide Disc Scraper Installation 19000

These instructions apply to an installation of scraper kit part number 121-781A.

Optional carbide disc scrapers are not factory installed.
Start with row 1 (left-most row unit):

1. Remove one or both disc blades to gain safe access to the mount ①. Note the position of bushings and spacers for correct re-assembly (page 37).
2. Remove the existing slotted scraper.
3. Select one: ㉓ 802-079C HHCS 3/8-16X1 1/4 GR5
   If Seed-Lok® is present, or also being mounted, also select one:
   ㉝ 804-013C WASHER LOCK SPRING 3/8 PLT
   Place the lock washer ㉝ on the bolt ㉓ (because the nut is not used).
4. Select one: ㉜ 804-012C WASHER FLAT 3/8 SAE PLT
   Place this flat washer on the bolt.
5. Select one: 890-357C SCRAPER-SPRING LOAD-AIR DESIGN
   If the blades were not completely pre-assembled, select one each:
   ㊿ K7090 AIR DESIGN SCRAPER LH SIDE
   (51) K7091 AIR DESIGN SCRAPER RH SIDE
   (53) K7096 SPACER AND WASHER ASSEMBLY
   (52) K7093 AIR DESIGN SCRAPER 15LB SPRING
   Nest one side (㊿, (51)) behind the other. Connect the spring (52) between the sides, using the small top holes. Insert the spacer (53) from the front, with the narrow raised center to the rear (in the large blade holes).
6. Insert the bolt through the scraper blades (㊿, (51)) and spacer (53).
7. If no Seed-Lok® is present, select one each:
   ㉝ 804-013C WASHER LOCK SPRING 3/8 PLT
   ㉖ 803-014C NUT HEX 3/8-16 PLT
   Secure the scraper assembly to the scraper mount ① using the lock washer ㉝ and nut ㉖.
8. If a Seed-Lok® is present (not shown), secure the scraper assembly to the Seed-Lok®, using a threaded hole present in the Seed-Lok®. The hex nut is ㉖ unused.
9. Re-mount the removed disc blade.

Weight Bracket Installation

These instructions apply to an installation of an optional 151-058A weight bracket kit.

1. Select one:
   (13)
   Select two:
   (37) 806-007C U-BOLT 3/4-10X4 1/32X4 1/2
   Select four sets:
   (36) 804-023C WASHER LOCK SPRING 3/4 PLT
   (28) 803-027C NUT HEX 3/4-10 PLT

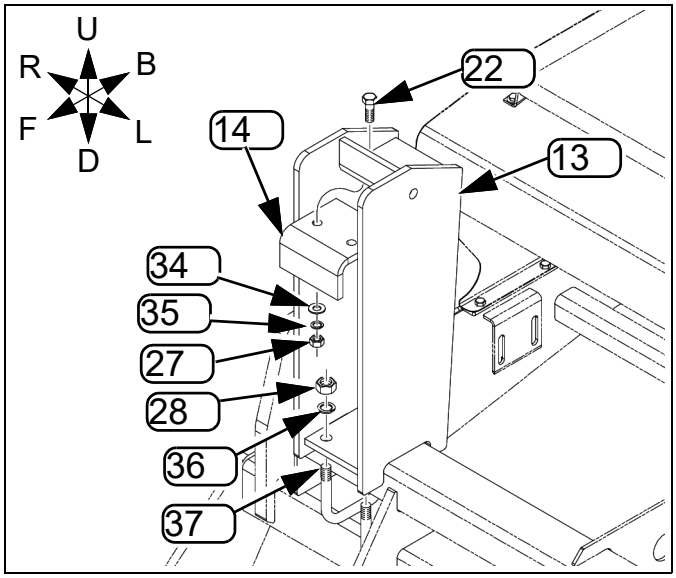

Weight Bracket Installation 18562A

2. Position the weight bracket weldment (13) at the left end of the top front frame tool bar. Orient the beveled edges and upper bracket to the back.
3. Install the U-bolts (37).
4. Secure the weldment (13) to the tool bar with the lock washers (36) and nuts (28).
5. Examine the weights to be used, and determine how to install the weight bracket adjustment legs. The orientation depicted is not optimal for all weights.
6. Select one:
   (14)
   and two sets:
   (22) 802-055C HHS 5/8-11X2 GR5
   (34) 804-021C WASHER FLAT 5/8 SAE PLT
   (35) 804-022C WASHER LOCK SPRING 5/8 PLT
   (27) 803-021C NUT HEX 5/8-11 PLT
7. Secure the weight bracket adjustment leg (14) to the upper bracket with the bolts (22), flat washers (34), lock washers (35) and nuts (27). Depending on how your weights lock, it may be necessary to leave the bolts loose until after the weights are mounted.
8. Select one:
   (47) 838-265C DECAL REFLECTOR AMBER 2x9
   (16) 151-446D 10 GA 9.5 X 2.5 DECAL BRACKET
   (38) 806-263C U-BOLT 3/8-16X4 1/32X5
   Select two
   (31) 804-011C WASHER FLAT 3/8 USS PLT
   (33) 804-013C WASHER LOCK SPRING 3/8 PLT
   (26) 803-014C NUT HEX 3/8-16 PLT

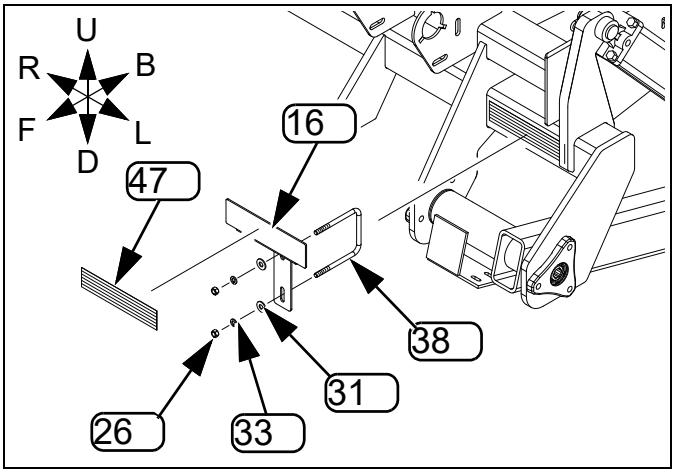

Reflector Installation 18621A

9. Install the U-bolt (38) in the lower front frame tube.
10. Install the decal mount (16) on the U-bolt.
11. Install the flat washers (31), lock washers (33), and nuts (26) on the U-bolt.
12. Install the amber reflector decal (47) on the decal mount.
13. Repeat the above steps for the opposite side of the drill.
14. See frame weight information on page 30 for weight selection.

Great Plains

"Harvest Starts Here."

Great Plains, Mfg.
1525 E. North St.
P.O. Box 5060
Salina, KS 67402